934

LLNL 1995h

UCRL-LR-119735

Fissile Material Disposition Program

Deep Borehole Disposal Facility PEIS Data Input Report for Immobilized Disposal

Immobilized Disposal of Plutonium in Coated Ceramic Pellets in Grout Without Canisters

Version 3.0

January 15, 1996

DO NOT REMOVE
FROM READING ROOM

LAWRENCE LIVERMORE NATIONAL LABORATORY
University of California • Livermore, California • 94551

DOE
Box 32
Item 1

PROPERTY OF
U.S. GOVERNMENT

DISCLAIMER

This document was prepared as an account of work sponsored by an agency of the United States Government. Neither the United States Government nor the University of California nor any of their employees, makes any warranty, express or implied, or assumes any legal liability or responsibility for the accuracy, completeness, or usefulness of any information, apparatus, product, or process disclosed, or represents that its use would not infringe privately owned rights. Reference herein to any specific commercial products, process, or service by trade name, trademark, manufacturer, or otherwise, does not necessarily constitute or imply its endorsement, recommendation, or favoring by the United States Government or the University of California. The views and opinions of authors expressed herein do not necessarily state or reflect those of the United States Government or the University of California, and shall not be used for advertising or product endorsement purposes.

This report has been reproduced directly from the best available copy.

Available to DOE and DOE contractors from the Office of Scientific and Technical Information P.O. Box 62, Oak Ridge, TN 37831 Prices available from (615) 576-8401, FTS 626-8401

Available to the public from the National Technical Information Service U.S. Department of Commerce 5285 Port Royal Rd., Springfield, VA 22161

Work performed under the auspices of the U.S. Department of Energy by Lawrence Livermore National Laboratory under Contract W-7405-Eng-48.

UCRL-LR-119735
Distribution Category UC-702

Fissile Material Disposition Program

Deep Borehole Disposal Facility PEIS Data Input Report for Immobilized Disposal

Immobilized Disposal of Plutonium in Coated Ceramic Pellets in Grout Without Canisters

Issue Approvals/Record of Revision

Version	Date	Description	Prepared By	Approvals	
				Name	Signature
1.0	12/19/94	Borehole Facility Data Report	Ananda M. Wijesinghe & Ronald J. Shaffer	William G. Halsey	
2.0	4/28/95	Borehole Facility Data Report	Ananda M. Wijesinghe & Ronald J. Shaffer	William G. Halsey	
3.0	1/15/96	Borehole Facility Data Report	Ananda M. Wijesinghe & Ronald J. Shaffer	William G. Halsey	Wm. G. Halsey

CONTRIBUTORS

The following individuals contributed to the preparation of this Deep Borehole Disposal Facility Data Report:

1. Deep Borehole Alternative Team Leader:
   William G. Halsey, *LLNL*

2. PEIS Data Report Lead Author, Team Leader, and Scientific Editor:
   Ananda M. Wijesinghe, *LLNL*

3. Project Interfaces:
   Patrick D. Coyle, *LLNL*, Integration Team
   Gregory Gdowski, *KMI*, Immobilization Task
   Tom Gerard, *Tetra Tech*, PEIS Requirements

4. Contributing Authors:
   Michael W. Butler, *LLNL*
   Matthew J. Fischer, *LLNL*
   Giday W. Gabriel, *LANL*
   Darrla Giersch, *SNL*
   Patrick Gildea, *SNL*
   Grant Heiken, *LANL*
   Jack Hovingh, *LLNL*
   W. Michael Howard, *LLNL*
   Edward J. Kansa, *LLNL*
   Robert G. Lanier, *LLNL*
   Richard Morley, *LANL*
   Lonnie Moore, *LLNL*
   Kartik C. Mujumdar, *LLNL*
   Chan Pang, *Bechtel*
   Edward W. Russell, *LLNL*
   Ronald J. Shaffer, *LLNL*
   Garry R. Thomas, *LLNL*
   Ananda M. Wijesinghe, *LLNL*

5. Computer-Aided Graphics:
   Joel A. Watkins, *LLNL*

6. Administrative Support:
   Barbara Van Almelo, *LLNL*

7. Publications Editor:
   Peter W. Murphy, *LLNL*

Contents

List of Figures x
List of Tables xi
Preface xiii
1. Deep Borehole Disposal Facility—Missions and Assumptions 1-1
1.1 Deep Borehole Disposal Facility Missions 1-1
1.1.1 Overview of Deep Borehole Disposal Facility Design Concept 1-2
1.1.1.1 Proliferation Resistance 1-2
1.1.1.2 Isolation of Radionuclides from the Biosphere 1-4
1.1.1.3 Pre-Closure Safety 1-5
1.1.1.4 Post-Closure Criticality Safety 1-6
1.1.1.5 Timeliness of Implementation 1-7
1.1.1.6 Cost of Implementation 1-7
1.1.2 Long-Term Performance Strategy of the Design Concept 1-8
1.2 Deep Borehole Disposal Facility Assumptions 1-8
1.2.1 Deep Borehole Disposal Facility Capacity/Capability 1-8
1.2.2 Deep Borehole Disposal Facility Operating Basis 1-8
1.2.2.1 R&D Effort 1-11
1.2.2.2 Permitting and Licensing Schedule 1-12
1.2.2.3 Construction, Operation, Closure, and Post-Closure Schedules 1-12
1.2.3 Compliance 1-12
1.2.3.1 Rules, Regulations, Codes, and Guidelines 1-12
1.2.3.2 Safeguards and Security 1-12
1.2.3.3 Environmental, Safety, and Health (ES&H) 1-12
1.2.3.4 Buffer Zones 1-14
1.2.3.5 Decontamination and Decommissioning 1-14
1.2.3.6 Non–Safety/Safety Class 1-14
1.2.3.7 Toxicological/Radiological Exposure 1-14
1.2.3.8 Waste Management 1-14
2. Deep Borehole Disposal Facility Description 2-1
2.1 General Facility Description 2-1
2.1.1 Functional Description 2-1
2.1.2 Deep Borehole Disposal Facility Plot Plan 2-3
2.1.3 Building Descriptions 2-6
2.1.3.1 Receiving and Processing 2-8
2.1.3.2 Waste Management 2-8
2.1.3.3 Administration 2-8
2.1.3.4 Personnel Services 2-8
2.1.3.5 Central Warehouse 2-9
2.1.3.6 Drilling and Emplacing–Borehole Sealing Operations Center 2-9
2.1.3.7 Plant Utilities 2-9
2.1.3.8 Security Center 2-11
2.1.3.9 Environmental, Safety, and Health 2-11
2.1.3.10 Medical Center 2-11
2.1.3.11 Fire Station 2-11
2.1.3.12 Emplacing Shift Office Trailers 2-11
2.1.3.13 Emplacing Waste Management Facility 2-11
2.1.3.14 Radiation Decontamination and Monitoring 2-11
2.1.3.15 Drilling Shift Office Trailers 2-11

2.2 Design Safety 2-11
2.2.1 Earthquake 2-11
2.2.2 Wind 2-12
2.2.3 Floods 2-12
2.2.4 Fire Protection 2-12
2.2.5 Safety Class Instrumentation and Control 2-13
2.2.6 Nuclear Criticality 2-13
2.2.6.1 Criticality Safety of Surface Operations 2-13
2.2.6.2 Criticality Regulations for Surface Processing 2-13
2.2.6.3 Post-Emplacement Downhole Criticality Safety 2-13
2.2.6.4 Regulations for Post-Emplacement Downhole Criticality 2-19
2.2.7 Ventilation 2-19
2.3 Safeguards and Security System Facilities 2-20
2.3.1 Physical Security Requirements 2-20
2.3.1.1 Property Protection Areas (PPA) 2-20
2.3.1.2 Limited Areas (LA) 2-20
2.3.1.3 Protected Areas (PA) 2-21
2.3.1.4 Storage Areas 2-21
2.3.1.5 Access Control 2-21
2.3.1.6 Key Control 2-21
2.3.1.7 Communications 2-21
2.3.1.8 Protective Forces 2-21
2.3.1.9 Employee Training 2-21
2.3.1.10 Material Security Transfer 2-21
2.3.1.11 Emergency Planning 2-22
2.3.1.12 Annual Surveys 2-22
2.3.2 Physical Security System Facilities 2-22
2.3.2.1 Site Fencing 2-22
2.3.2.2 Security Processing—Employees/ Visitors Center 2-22
2.3.2.3 Security Center 2-22
2.3.2.4 Personnel and Vehicle Access Control 2-22
2.3.2.5 Security Monitoring and Intrusion Alarm Systems 2-22
2.3.2.6 Computer Security 2-23
2.3.3 Material Control and Accountability 2-23
2.3.3.1 Material Accountability 2-23
2.3.3.2 Nuclear Material Control 2-23
2.3.3.3 MC&A System Integration 2-23
2.3.4 IAEA Safeguards Requirements 2-24
2.3.4.1 General Accountability 2-24
2.3.4.2 Records Systems 2-24
2.3.4.3 International Inspection Provisions 2-24
2.3.5 Safeguards and Security Requirements Related to Proliferation Resistance of the Ceramic Pellet Plutonium Disposal Option 2-24
3. Generic Site Description, Site Map, and Land Use Requirements 3-1
3.1 Generic Site Description 3-1
3.1.1 Geographic Setting 3-1
3.1.2 Climate 3-1
3.1.3 Demographics 3-2
3.1.4 Natural Resources and Land Use 3-2
3.1.5 Subsurface Geology and Hydrology 3-2
3.1.6 Seismicity and Geologic Stability 3-2
3.1.7 Site Map 3-5
3.2 Land Area Requirements During Operation 3-5

3.3 Land Area Requirements During Construction 3-5
3.3.1 Land Use 3-5
3.3.2 Off-Site Transportation 3-5
4. Process Descriptions 4-1
4.1 Surface Processing Facility 4-1
4.1.1 Function 4-1
4.1.2 Feeds 4-1
4.1.3 Products 4-1
4.1.4 Utilities Required 4-3
4.1.5 Chemicals Required 4-3
4.1.6 Special Requirements—Support Systems 4-3
4.1.7 Waste Generated 4-3
4.1.7.1 Emissions and Effluents 4-3
4.1.7.2 Solid and Liquid Wastes 4-3
4.2 Drilling Facility 4-3
4.2.1 Function 4-3
4.2.2 Feeds 4-6
4.2.3 Products 4-7
4.2.4 Utilities Required 4-7
4.2.5 Chemicals Required 4-7
4.2.6 Special Requirements 4-7
4.2.6.1 Monitoring for Naturally Occurring Radiation 4-7
4.2.6.2 Monitoring for Hydrogen Sulfide 4-7
4.2.7 Waste Generated 4-7
4.2.7.1 Emissions and Effluents 4-7
4.2.7.2 Solid and Liquid Wastes 4-7
4.3 Emplacing–Borehole Sealing Facility 4-7
4.3.1 Function 4-7
4.3.2 Feeds 4-15
4.3.3 Products 4-16
4.3.4 Utilities Required 4-16
4.3.5 Chemicals Required 4-16
4.3.6 Special Requirements 4-16
4.3.7 Waste Generated 4-16
4.3.7.1 Emissions and Effluents 4-16
4.3.7.2 Solid and Liquid Wastes 4-16
4.4 Waste Management Facility 4-16
4.4.1 Waste Management Systems 4-16
4.4.1.1 Waste Treatment and Storage Systems 4-16
4.4.1.2 Utility Wastewater Treatment 4-16
4.4.1.3 Process Wastewater Management 4-16
4.4.1.4 Sanitary Wastewater Treatment 4-18
4.4.1.5 Waste Heat Management 4-18
4.4.1.6 Storm Water Management 4-18
4.4.2 Waste Management Feeds 4-18
4.4.3 Waste Management Function Products 4-18
4.4.4 Waste Management Functon Special Requirements 4-18
5. Resource Needs 5-1
5.1 Materials/Resources Consumed During Operation 5-1
5.1.1 Utilities Consumed 5-1
5.1.1.1 Surface Processing Facility 5-1
5.1.1.2 Drilling and Emplacing–Borehole Sealing 5-1
5.1.2 Water Balance 5-1

5.1.3 Chemicals Consumed 5-2
5.1.3.1 Surface Processing Facility 5-2
5.1.3.2 Drilling and Emplacing–Borehole Sealing 5-2
5.1.4 Radiological Materials Required 5-2
5.2 Materials/Resources Consumed During Construction 5-2
5.2.1 Utilities 5-2
5.2.2 Nonradiological Materials 5-2
5.2.3 Land use 5-2
6. Employment Needs 6-1
6.1 Employment Needs During Operation 6-1
6.2 Badged Employees at Risk of Radiological Exposure 6-1
6.3 Employment Needs During Construction 6-1
7. Wastes and Emissions from the Deep Borehole Disposal Facility 7-1
7.1 Wastes and Emissions During Operation 7-1
7.1.1 Emissions 7-1
7.1.2 Solid and Liquid Wastes 7-2
7.1.2.1 High-Level Wastes 7-3
7.1.2.2 Transuranic Wastes 7-3
7.1.2.3 Low-Level Wastes 7-3
7.1.2.4 Mixed Transuranic Wastes 7-3
7.1.2.5 Mixed Low-Level Wastes 7-3
7.1.2.6 Hazardous Wastes 7-3
7.1.2.7 Nonhazardous (Sanitary) Wastes 7-3
7.1.2.8 Nonhazardous (Other) Wastes 7-3
7.2 Wastes and Emissions Generated During Construction 7-3
7.2.1 Emissions 7-4
7.2.2 Solid and Liquid Wastes 7-4
7.2.2.1 Radioactive Wastes 7-5
7.2.2.2 Hazardous Wastes 7-5
7.2.2.3 Nonhazardous Wastes 7-5
8. Design Process for Accident Mitigation 7-5
8.1 Operational and Design Basis, and Beyond Design Basis Bounding Accidents 8-1
8.1.1 Operational and Design Basis Accidents 8-2
8.1.1.1 Earthquake (Category 1) 8-2
8.1.1.2 Tornado (Category 1) 8-3
8.1.1.3 Flood (Category 1) 8-3
8.1.1.4 Ceramic Pellet Storage Container Breakage (Category 3) 8-3
8.1.1.5 Ceramic Pellet Container Breach (Category 3) 8-4
8.1.1.6 On-Site Pellet Transporter Accident (Category 3) 8-4
8.1.1.7 Grouting Process Enclosure Fire (Category 3) 8-4
8.1.1.8 Ceramic Pellet Feed Bin Spill (Category 3) 8-4
8.1.1.9 Grout Mix Spill (Category 3) 8-5
8.1.1.10 Failure of Ventilation Blower (Category 3) 8-5
8.1.1.11 Loss of Off-Site Electrical Power (Category 3) 8-5
8.1.1.12 Bucket Emplacement: Dropped Emplacement Bucket (Category 3) 8-5
8.1.1.13 Bucket Emplacement: Bucket Stuck in Isolation Zone (Category 3) 8-5
8.1.1.14 Bucket Emplacement: Bucket Stuck in Emplacement Zone (Category 3) 8-6
8.1.1.15 Bucket Emplacement: Failure to Open of Bucket Pellet Release Valve (Category 3) 8-6
8.1.1.16 Bucket Emplacement: Premature Opening of Bucket Pellet Release Valve (Category 3) 8-7

8.1.1.17 Bucket Emplacement: Pellet–Grout Mix Solidifies in Bucket Before Release (Category 3) 8-7
8.1.1.18 Bucket Emplacement: Pellet–Grout Mixing System Breaks Pellets (Category 3) 8-7
8.1.1.19 Bucket Emplacement: Pellets Break Upon Release (Category 3) 8-8
8.1.1.20 Bucket Emplacement: Emplacement Facility Combustibles Fire (Category 3) 8-8
8.1.1.21 Bucket Emplacement: Emplacement Facility Electrical Fire (Category 3) 8-8
8.1.1.22 Loss of Electrical Power (Category 3) 8-8
8.1.1.23 Pumped Emplacement: Rupture of the Delivery Pipe (Category 3) 8-9
8.1.1.24 Pumped Emplacement: Pellet–Grout Mix Solidifies in Delivery Pipe (Category 3) 8-9
8.1.1.25 Pumped Emplacement: Dropped Delivery Pipe (Category 3) 8-9
8.1.1.26 Pumped Emplacement: Delivery Pipe Becomes Stuck in Borehole (Category 3) 8-10
8.1.1.27 Pumped Emplacement: Pellet–Grout Mixing System Breaks Pellets (Category 3) 8-10
8.1.1.28 Pumped Emplacement: Pellet–Grout Mix Breaks Upon Release (Category 3) 8-10
8.1.1.29 Pumped Emplacement: Emplacement Facility Combustibles Fire (Category 3) 8-11
8.1.1.30 Pumped Emplacement: Emplacement Facility Electrical Fire (Category 3) 8-11
8.1.1.31 Pumped Emplacement: Loss of Electrical Power (Category 3) 8-11
8.1.1.32 Summary of Design Basis Accident Scenarios and Release Fractions 8-11
8.1.2 Beyond Design Basis Accidents 8-13
8.1.2.1 Failure of Ventilation Filter (Category 3) 8-13
8.1.2.2 Uncontrolled Chemical Reactions (Category 3) 8-13
8.1.2.3 Pellet Storage Criticality (Category 3) 8-14
8.1.2.4 Pellet–Grout Mixing Process Criticality (Category 3) 8-14
8.1.2.5 Summary of Beyond Design Basis Accident Scenarios and Release Fractions 8-14
8.2 Facility-Specific Accident Mitigating Features 8-14
9. Transportation 9-1
9.1 Intrasite Transportation 9-1
9.1.1 On-Site Transportation of Radiological and Hazardous Materials 9-1
9.1.2 Feed Form Transportation to Surface Processing Facility 9-1
9.1.3 Disposal Form Transportation to Emplacing-Borehole Sealing Facility 9-1
9.2 Input Material Streams 9-1
9.2.1 Fissile Material Packaging for Transportation 9-1
9.2.2 Transported Fissile Materials and Shipping Volumes 9-3
10. References 10-1
11. Glossary 11-1
11.1 Special Terminology 11-1
11.2 Acronyms and Abbreviations 11-2

LIST OF FIGURES

Figure 1.1.1-1 The Deep Borehole Disposal Concept for Immobilized Disposal of Coated Ceramic Pellets in Grout 1-3
Figure 1.2.2-1 Deep Borehole Disposal Facility Overall Project Schedule 1-9
Figure 1.2.3.1-1 Existing Regulations that May Apply to a Deep Borehole Disposal Facility 1-13
Figure 2.1.1-1 Deep Borehole Disposal Facility Flow Diagram 2-1
Figure 2.1.2-1 Perspective View of the Deep Borehole Disposal Facility 2-4
Figure 2.1.2-2 Deep Borehole Disposal Facility Site Plan Detail and Plutonium Transportation Routes 2-5
Figure 2.1.3.1-1 Surface Processing Facility Receiving Sub-Facility Plot Plan 2-8
Figure 2.1.3.1-2 Emplacing–Borehole Sealing Facility—Pellet Grout Mixing Sub-Facility Plot Plan 2-9
Figure 2.1.3.2-1 Process Waste Management Facility Plot Plan 2-10
Figure 2.2.6.3-1 Criticality Analysis for Ceramic Pellet–Grout–Brine Mixture in the Borehole 2-16
Figure 2.2.6.3-2 Criticality Analysis for Ceramic Pellet–Brine Mixture in the Borehole 2-17
Figure 3.1.1-1 Geographic Generic Site Area Map of Deep Borehole Disposal Facility 3-1
Figure 3.1.5-1 Geologic Cross Section on A-A′ (Figure 3.1.1-1) of Hydrogeologic Features at the Deep Borehole Disposal Facility Site 3-3
Figure 3.1.7-1 Deep Borehole Disposal Facility Site Map (Including Security Boundaries) 3-6
Figure 4.1.1-1 Process Block Flow Diagram 4-2
Figure 4.2.1-1 Drilling Process Flow Diagram 4-4
Figure 4.2.1-2 Borehole Configuration Geometry for Immobilized Disposal of Coated Ceramic Pellets in Grout 4-5
Figure 4.2.1-3 Casing and Cementing Process Flow Diagram 4-6
Figure 4.3.1-1 Pellet–Grout Mix Emplacement Process Flow Diagram 4-8
Figure 4.3.1-2 Bucket Emplacement Method—Bucket Filling Process 4-9
Figure 4.3.1-3 Bucket Emplacement Method—Delivery Process 4-10
Figure 4.3.1-4 Pumped Emplacement Method—Delivery Process 4-12
Figure 4.3.1-5 Pumped Emplacement Method—Delivery and Packer Relocation Cycle 4-13
Figure 4.3.1-6 Pumped Emplacement Method—Vibratory Compaction of Mix 4-14
Figure 4.3.1-7 Cementing/Sealing Process Flow Diagram 4-15
Figure 4.4.1-1 Waste Management Process Flow Diagram 4-17
Figure 5.1.2-1 Deep Borehole Disposal Facility Water Balance (Dry Site) 5-3
Figure 9.2.1-1 Modified Westinghouse Hanford Type B 208-L (55-Gal) Drum Package 9-2

LIST OF TABLES

Table 2.1.1-1 Deep Borehole Disposal Facility Design Sizing Parameters 2-2
Table 2.1.3-1. Deep Borehole Disposal Facility Data 2-6
Table 2.2.6.3-1 Chemical Compositions of Materials Used in Criticality Analyses 2-15
Table 3.1.5-1 Hydraulic and Transport Properties of the Hydrogeologic Zones 3-4
Table 5.1.1.1-1 Utilities Consumed by the Surface Processing Facility During the Operation Period 5-1
Table 5.1.1.2-1 Utilities Consumed by the Drilling and Emplacing–Borehole Sealing Facilities During the Operation Period 5-1
Table 5.1.3.1-1 Annual Chemicals or Materials Consumed by the Surface Processing Facility During Operation 5-2
Table 5.1.3.2-1 Nonradiological Materials Consumed by the Drilling and Emplacing–Borehole Sealing Facilities During the Operation Period 5-4
Table 5.2.1-1 Utilities Consumed During the Construction Period 5-4
Table 5.2.2-1 Materials Consumed During the Construction Period 5-4
Table 6.1-1 Employment During Operation 6-1
Table 6.3-1 Number of Construction Employees Needed by Year 6-1
Table 7.1.1-1 Chemical Emissions Generated by the Surface Processing Facility During the Operation Period 7-1
Table 7.1.1-2 Chemical Emissions Generated by the Drilling and Emplacing–Borehole Sealing Facility During the Operation Period 7-1
Table 7.1.1-3 Radiological Emissions Generated by the Surface Processing Facility During the Operation Period 7-2
Table 7.1.2-1 Annual Spent Fuel and Waste Volumes During Operation of Surface Facilities 7-2
Table 7.1.2-2. Solid and Liquid Wastes Generated by the Drilling and Emplacing–Borehole Sealing Facilities During the Operation Period 7-3
Table 7.2.1-1 Emissions During the Peak Construction Year 7-4
Table 7.2.2-1 Total Solid and Liquid Wastes Generated During Construction 7-4
Table 8.1.1.32-1 Summary of Design Basis Accident Scenarios and Release Fractions 8-11
Table 8.1.2.5-1 Summary of Beyond Design Basis Accident Scenarios and Release Fractions 8-15
Table 9.2.1-1 Candidate Packages for Transporting Immobilized Ceramic Pellets 9-3
Table 9.2.2-1 Intersite Transportation Data 9-4

PREFACE

The Department of Energy (DOE) is examining options for disposing of excess weapons-usable nuclear materials (principally plutonium and highly enriched uranium) in a form or condition that is substantially and inherently more difficult to recover and reuse in weapons production. The potential environmental impacts of facilities designed to implement disposition alternatives will be described in the *Storage and Disposition of Weapons-Usable Fissile Material Programmatic Environmental Impact Statement* (PEIS).

The PEIS will examine the environmental, safety, and health impacts of implementing each disposition alternative on land use, facility operations, and site infrastructure; air quality and noise; water, geology, and soils; biotic, cultural, and paleontological resources; socioeconomics; human health; normal operations and facility accidents; waste management; and transportation. This data report is prepared to assist in estimating the environmental effects associated with the construction and operation of a Deep Borehole Disposal Facility, an alternative under consideration for inclusion in the PEIS.

The facility projects under consideration are, for the most part, not site specific. This report therefore concentrates on environmental, safety, and health impacts at a generic site appropriate for siting a Deep Borehole Disposal Facility.

1. DEEP BOREHOLE DISPOSAL FACILITY—MISSIONS AND ASSUMPTIONS

1.1 Deep Borehole Disposal Facility Missions

Directives and Mission

Following President Clinton's Non-Proliferation Initiative, launched in September, 1993, an Interagency Working Group (IWG) was established to conduct a comprehensive review of the options for the disposition of weapons-usable fissile materials from nuclear weapons dismantlement activities in the United States and the former Soviet Union. The IWG review process will consider technical, nonproliferation, environmental, budgetary, and economic considerations in the disposal of plutonium. The IWG is co-chaired by the White House Office of Science and Technology Policy and the National Security Council. The Department of Energy (DOE) is directly responsible for the management, storage, and disposition of all weapons-usable fissile material.

The Department of Energy has been directed to prepare a comprehensive review of long-term options for Surplus Fissile Material (SFM) disposition, taking into account technical, nonproliferation, environmental, budgetary, and economic considerations. DOE's objectives in this task include the following:

- *Strengthening of national and international arms control efforts by providing an exemplary model for storage of all weapons-usable fissile materials and disposition of surplus weapons-usable fissile materials;*
- *Ensuring that storage and disposition of weapons-usable fissile materials is carried out in compliance with ES&H standards;*
- *Minimizing the prospect that surplus U.S. weapons-usable fissile materials could be reintroduced into arsenals from which they came and therefore increasing the prospect of reciprocal measures by Russia and other nuclear powers;*
- *Minimizing the risk that surplus U.S. weapons-usable fissile materials could be obtained by unauthorized parties; and*
- *Achieving these objectives in a timely and cost-effective manner.*

In response to the directive to the DOE, the Fissile Materials Disposition Program (FMDP) was created by the DOE to investigate the available alternatives. In a DOE-sponsored study by the Committee on International Security and Arms Control of the National Academy of Sciences entitled the "Management and Disposition of Excess Weapons Plutonium" in January 1994, the three most promising alternatives for long-term disposition of excess weapons plutonium satisfying these aims were identified as the following:

1. Fabrication and use of excess plutonium as fuel, without reprocessing, in existing or modified nuclear reactors;
2. Vitrification of excess plutonium in combination with high-level nuclear waste (HLW) and subsequent disposal in a high-level nuclear waste repository; and
3. Geologic disposal of the excess plutonium in deep boreholes.

Accordingly, the DOE has initiated a number of projects within the FMDP to investigate these and other alternatives. In particular, it created the Geologic Disposal Options (GDO) Task, having the charter to investigate all geologic options except emplacement in the Mined Geologic Disposal System, which is currently being developed for high-level waste (MGDS-HLW). It is the purpose of the GDO Task to develop a sufficient information base for these options to allow assessment of each option in a Programmatic Environmental Impact Statement and to permit comparison with the MGDS-HLW, for which a substantial base of data and evaluatory studies already exist.

Deep Borehole Disposition Alternatives

Driven by the recommendation of the NAS study and by a belief that the concept might offer advantages in effectiveness, cost, and speed for the Program mission, the initial focus of the GDO Task is on the Deep Borehole Disposition Option. The Deep Borehole Disposition Task will investigate in detail the feasibility of Direct and Immobilized Disposal of these fissile materials within deep boreholes drilled in appropriate stable geologic formations. The DOE has requested the Lawrence Livermore National Laboratory and the Los Alamos National Laboratory to undertake this effort.

The preparation of a Programmatic Environmental Impact Statement is a requirement of the National Environmental Policy Act (NEPA). This report presents the data and supporting information necessary for the preparation of a PEIS for Immobilized Disposal of Plutonium in a Deep Borehole. The data consists of summaries of the facility design issues and concepts; descriptions of the facility structures, their layout, and the required support services; descriptions and quantities of the environmental emissions, effluents, and wastes generated by the facility; and its resource and employment needs. The data covers the construction, operation, closure, and post-closure performance phases of the facility. In addition to the conceptual design and the PEIS data for the facility, the report also addresses the Research, Development, Testing, and Risk Assessment activities that are required to support the engineering design and site selection for an actual facility.

The design presented in this report is a preliminary conceptual design for a new Deep Borehole Disposal Facility for Immobilized Disposal of Surplus Fissile Materials that, if built, would fully comply with applicable existing environmental, safety, and health laws, regulations, and orders. However, this design is only conceptual and is not intended to serve as a basis for setting up new engineering design and safety standards. These standards can be established only after significant additional work. The Deep Borehole Disposal Facility accepts surplus fissile materials as plutonium-loaded ceramic-coated ceramic pellets for permanent disposal in deep stable geologic formations. The disassembly and conversion of the original feed materials and the immobilization of the plutonium in this disposal form are assumed to be performed at a separate Disassembly, Conversion, and Immobilization Facility at a different site. A *Deep Borehole Disposal Facility PEIS Data Input Report for Direct Disposal* (Wijesinghe et al., 15 January, 1996) similar to this report has been prepared for direct disposal of plutonium in a Deep Borehole Disposal Facility.

1.1.1 Overview of Deep Borehole Disposal Facility Design Concept

In the deep borehole concept for geologic disposal of surplus fissile materials, the material will be emplaced in the lower part of one or more deep boreholes drilled in tectonically, hydrologically, thermally, and geochemically stable rock formations (see Figure 1.1.1-1). Deep, Precambrian crystalline plutonic/metamorphic rock formations appear to have the most favorable characteristic for deep borehole disposal of fissile materials. The depths considered for the "emplacement zone" (2–4 km) in the deep boreholes are several thousands of meters greater than those of mined geologic repositories. The plutonium-loaded ceramic pellets, containing 1% plutonium by weight, are mixed with an equal volume of plutonium-free ceramic pellets and a specially formulated sealing grout, and the mixture is emplaced in the emplacement zone of the borehole without any canisters. The plutonium-free ceramic pellets serve as an inexpensive filler material and reduce the effective plutonium loading of the pellets to 0.5%. The volume fraction of the ceramic pellet aggregate in the pellet–grout mixture is selected to be close to the maximum packing fraction for spherical pellets to prevent further increase or segregation of pellets through settling. The ceramic material is assumed to be a tailored material containing the phases zirconolite ($CaZrTi_2O_7$) and perovskite ($CaTiO_3$) in appropriate proportions and to be approximately 4.0 g/cm^3 in density. A total of 1,250 t of Pu-loaded pellets containing 12.5 t of Pu is emplaced in a single borehole. Thus, the full 50 t of plutonium available for disposal is disposed in four deep boreholes. Once the emplacement zone of the borehole is filled with emplaced material, the "isolation zone," extending from the top of the emplacement zone to the ground surface, is filled and sealed with appropriate materials.

1.1.1.1 Proliferation Resistance

The high resistance to fissile material recovery offered by emplacement in the deep borehole in the present design arises from two sources. First, because of the great depth and the resulting difficulty of gaining access (see National Academy of Sciences, *Management and Disposition of Excess Weapons Plutonium,* 1994), the deep borehole design offers a very high degree of security against recovery by all except the host government in possession of the disposal site. Recovery by even the host government would be a difficult, expensive, hazardous, time-consuming, and easily detectable under taking. Thus, it is essentially a method for permanent disposal of the fissile material without the intent of later retrieval. The immobilized ceramic pellet disposal form used in this design confers a second layer of proliferation resistance because it increases the difficulty of processing any mined-out material into weapons-usable fissile material. Additional layers of defense against proliferation can be embedded in the ceramic pellet disposal form by including optional chemicals that inhibit chemical separation, increase neutron absorption, or increase the difficulty of separation of the fissile isotopes. The degree of physical dilution and the difficulty of chemical separation increase the proliferation resistance provided by the ceramic disposal form.

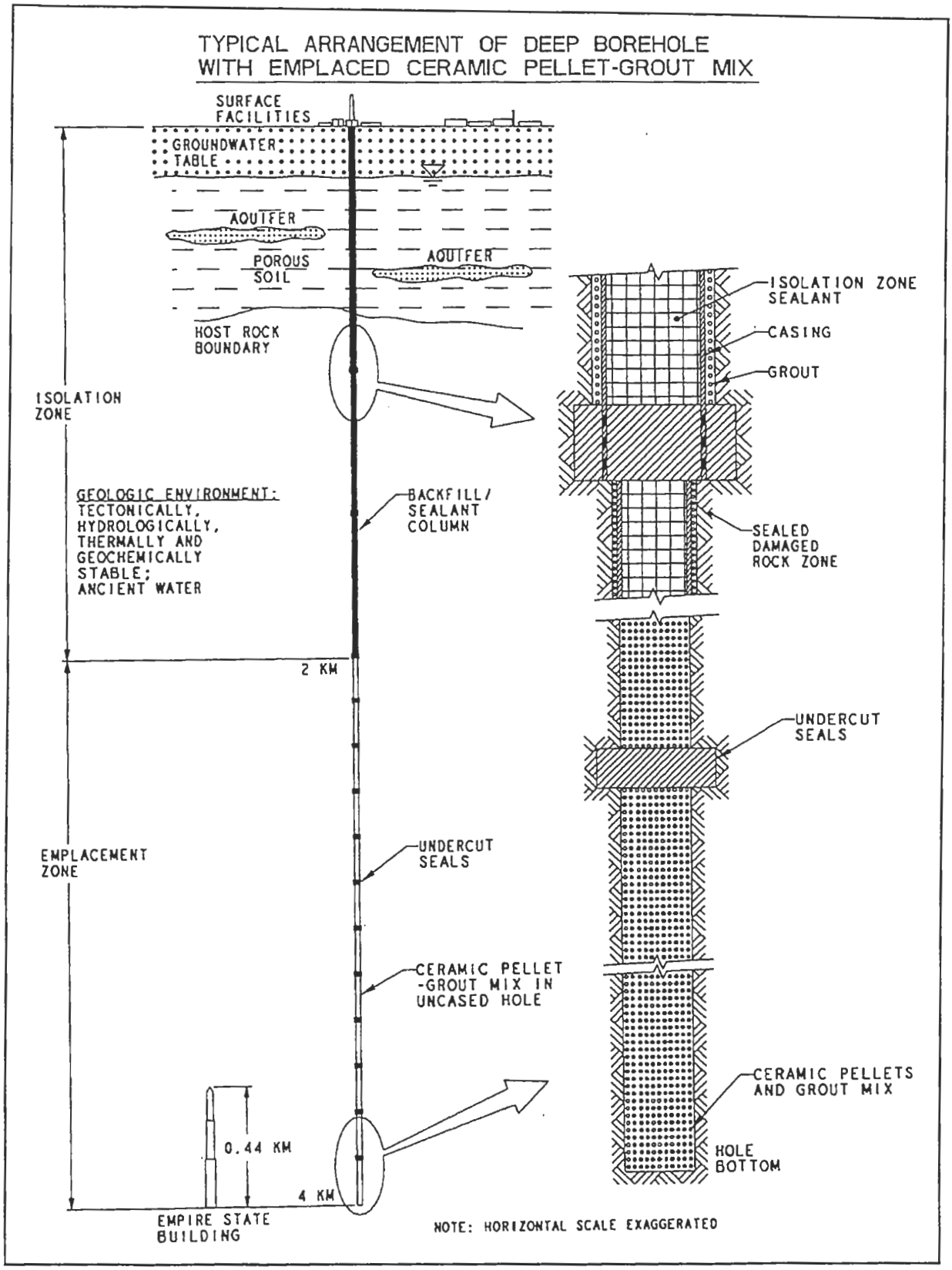

Figure 1.1.1-1. The Deep Borehole Disposal Concept for Immobilized Disposal of Coated Ceramic Pellets in Grout.

1.1.1.2 *Isolation of Radionuclides from the Biosphere*

The deep borehole concept relies on the great distance from the biosphere and on the properties and integrity of the surrounding rock to isolate the emplaced fissile radionuclides from the biosphere over an indefinitely long performance period. Because plutonium has a very long half-life (24,400 yr), and it decays to the even longer-lived (710 million year half-life) fissile ^{235}U, the length of this performance period is required to be much longer than the operational lifetimes of the order of 10,000 yr specified for nuclear waste repositories. The depth of the emplacement zone will be selected on the basis of performance analyses to ensure that the radionuclides emplaced in the borehole either will never reach the biosphere, or will decay to innocuous levels by the time they do reach the biosphere. The expectation that the deep borehole concept will be able to offer such performance is based on (1) the very slow movement of groundwater at great depths, (2) the very slow release of radionuclides to the flowing groundwater by the disposal form, (3) the retardation of the movement of dissolved radionuclides by physico-chemical interactions with the rock, and (4) the capability to perform the drilling, emplacing, and borehole sealing operations without compromising the natural barriers of the geosphere or establishing new pathways for transport of the radionuclides to the biosphere.

Fissile Radionuclide Release Barrier

The fissile radionuclides may be emplaced either in their original physical and chemical forms, or they may be first converted into an "immobilized" form that is more resistant to being dissolved by the brine at depth. Dissolution "releases" the material to the flowing brine that transports it away from the borehole, through the geosphere, possibly towards the biosphere. The rate of release of plutonium to the flowing brine is proportional to the product of the intrinsic dissolution rate of the disposal form per unit exposed surface area and the total surface area exposed to the flowing brine. *Therefore, a primary focus in designing this deep borehole facility has been to select a "disposal form" that is both highly resistant to dissolution and mobilization by the brine and that has the lowest possible exposed surface area.* The ceramic coating on the plutonium loaded ceramic pellets is designed to increase the dissolution resistance even further and to reduce the health hazard from the plutonium bearing ceramic dust during surface processing and emplacement in the borehole. Transport of the plutonium released by dissolution through the geosphere will occur by both advective transport by the flowing brine and molecular diffusion in the brine and rock. The brines, however, are believed to be essentially stagnant at great depths at appropriately selected sites. If the brine flow velocity is negligible as a result of appropriate site selection, the transport will occur at an extremely slow rate by molecular diffusion only. Therefore, another key design objective would be to minimize the flow of brine through the deep borehole, first by selecting a site with as few natural flow pathways and flow-initiating forces as possible, and second by inserting engineered barriers to fluid flow between the disposal form and its surroundings.

Engineered Hydraulic Barriers

Engineered flow barriers can take many forms. First, canisters can be used to contain and confine the disposal form; second, hydraulic seals can be installed within the borehole surrounding the canistered disposal form to prevent the passage of brine. However, given the corrosive nature of the brines and the high temperatures and stresses at depth, it is unlikely that any canister would survive more than a few hundred years. Therefore, canisters increase the safety of the surface processing and emplacement operations but do not significantly contribute to long-term post-closure performance of the deep borehole disposal method. Accordingly, a canisterless concept was selected for this design. Second, specially formulated sealing plugs, made from durable nearly-natural sealing materials, will be installed across the entire borehole cross section at strategic locations within the borehole. In addition, natural fractures and the drilling-induced near-field damage zone will also be sealed to reduce the influx of brine.

Engineered Transport Barriers

Engineered hydraulic barriers at depth are unlikely to be perfect seals and may degrade with time. Since preventing the escape of contaminants from the borehole, rather than preventing the transit of water through the borehole, is the ultimate objective of barrier design, imperfections in the design of hydraulic barriers can be offset by exploiting the capability of certain materials to sorb dissolved contaminants in the same way that contaminants are sorbed by the host rock. This presents an opportunity to embed a supplementary "chemo-sorptive transport barrier" functionality in engineered hydraulic seals. Finally, through the proper choice of geochemically compatible borehole sealants and by introducing appropriate chemical additives, it may be possible to alter the aqueous chemistry of the brine within the borehole to reduce the dissolution rate of the disposal form.

Unlike radioactive fission products in high-level waste and in spent fuel, plutonium does not generate a significant amount of heat (less than 3 W/kg for plutonium due

to radioactive decay). As a result, heat generation by the disposal form is not large enough to disturb the stagnant fluid regime at depth. However, sealing material degradation, enhanced dissolution of the disposal form by oxidants produced by water radiolysis, and gas generation due to degradation of materials must be considered. For example, plutonium emits alpha radiation, which is known to cause transformation of bentonitic sealing materials to amorphous silicious masses. These factors are particularly important to the durability of engineered barriers.

The Natural Transport Barriers

Irrespective of whether the contaminant is transported by advection with the flowing brine and/or by molecular diffusion, the contaminant will interact physico-chemically with the surrounding rock with the result that a portion of it will be sorbed on to the rock surface. Sorption of the contaminant by the rock reduces the effective speed with which the contaminant moves through and disperses within the rock by both advection and molecular diffusion. The greater the sorption by the rock the slower is the movement of the contaminant away from the source. Consequently, the geosphere itself serves as a "natural transport barrier" that helps to retard the escape of the contaminants from the borehole and their subsequent movement towards the biosphere. Plutonium, in particular, is highly sorbed, and its movement retarded, by most rock types; the unretarded transport time is increased by a factor of 50–10,000. For example, neglecting the dissolution rate limitation on plutonium mobilization, if the brine at an average depth of 3 km flows towards the surface at a uniform velocity of 1 cm/yr, and the retardation factor is uniform and is equal to 1000, the travel time to the surface for plutonium dissolved in brine at that depth would increase from 300,000 yr to 300 million yr.

At great depths in tectonically, thermally, hydraulically, and geochemically stable rock formations, the brine flow velocities are expected to be very small. This is advantageous because it reduces the corrosion and degradation of emplacement canisters and borehole seals, the rate of release of fissile materials to ground water through dissolution, and the rate of convective transport of dissolved contaminants through the surrounding geosphere towards the biosphere. Usually, candidate host rock types are expected to have few fractures at depth, and the apertures and hydraulic conductivities of the fractures that do exist are expected to be much smaller than at shallow depths. However, this is an area of controversy, because although the porosity and permeability of intact plutonic/metamorphic rocks are expected to be very small at great depths because of flow and healing under large compressive in situ stresses, there is also evidence that great depth does not guarantee that the fractures and faults will be closed.

More importantly, in normally pressurized host rock media at large depths, there is likely to be negligible net driving pressure to cause fluid flow, as indicated by the presence of ancient connate waters in granitic rocks at great depths. One force that potentially could initiate fluid circulation at depth is the buoyancy pressure force caused by the increase of temperature with depth. However, effective fluid density is a function not only of temperature but also of the concentration of salt in solution. In normally pressurized areas with normal geothermal gradients (15–25°C/km), it can be shown that the presence of moderate salinity gradients (e.g., 2% per km) would prevent hydrothermohaline instabilities from developing into fluid circulation loops for even relatively large fracture permeabilities. The stability of this stagnant fluid regime, however, can be disturbed in a number of ways. These include, for example, the introduction of large heat sources (e.g., heat of radioactive decay from HLW or criticality-induced heating and steam generation), formation of pressurized fluid zones by earthquake-generated rock mass displacements, and the linking-up of highly permeable existing fault zones by further faulting. Therefore, to exploit the absence of fluid flow and convective transport, criteria for the selection of a site for a deep borehole disposal facility must include the following: (1) seismic stability, (2) low geothermal gradient, (3) high salinity gradient, (4) low density of fracturing, (5) the absence of nearby active fault zones, and (6) the presence of very old, undisturbed connate water.

1.1.1.3 Pre-Closure Safety

The environmental, safety, and health impacts of the transporting, processing, emplacing, borehole sealing, decontaminating, and decommissioning activities that precede the closure of the deep borehole facility are important issues that affect the decision to choose a disposition alternative. However, compared with the difficulties and uncertainties involved in ensuring post-closure safety over an indefinitely long performance period, the risks of pre-closure safety are controllable aspects of the deep borehole facility design whose risks can be reduced to acceptable levels by adopting appropriate facility design safety margins and administrative procedures. Accordingly, Pre-Closure Safety is an important but secondary issue in deep borehole facility design.

The design of the Deep Borehole Facility will include the basic controls for assuring nuclear criticality safety in the Surface Processing Facility and the Emplacing–

Borehole Sealing Facility, during on-site transportation of disposal form between the site perimeter and the Surface Processing Facility, and during transportation of processed disposal form from the Surface Processing Facility to the Emplacing–Borehole Sealing Facility. The process designs will satisfy the double contingency principle, that is, "process designs shall incorporate sufficient safety factors so that at least two unlikely, independent, and concurrent changes in process conditions must occur before a criticality accident is possible" (DOE Order 5480.24). Basic control methods for the prevention of nuclear criticality include the following:

1. Provision of safe geometry (preferred).
2. Engineered density and/or mass limitation.
3. Provision of fixed neutron absorbers.
4. Provision of soluble neutron absorbers.
5. Use of administrative controls.

Although geometric controls are used extensively wherever practical, there are cases where geometric control alone cannot practically provide assurance of criticality safety. In these cases, engineered controls can be used to control neutron moderation, neutron absorbing poisons, and the mass and concentration/density of the materials.

Criticality Safety of Initial Emplacement Configuration and Emplacement Accidents

In canistered design concepts, the initial criticality of the plutonium in the emplacement configuration at emplacement time can be controlled by appropriate choice of the plutonium concentration in the disposal form, the design dimensions, spacing, and arrangement of the disposal form within the emplacement canister, the spacing between the emplacement canisters, and the composition dependent nuclear properties of the materials used in the design. In the present uncanistered design concept, downhole criticality is controlled by adjusting the plutonium loading and concentrations of neutron-absorbing additives in the disposal form for criticality safety in different pellet packing configurations, with emphasis on the close-packed arrangement of the pellets. The criticality analyses used for designing the emplacement configuration must account for not only the presence of the fissile material, but also the moderation, reflection, and absorption nuclear properties of the different materials. The materials that must be considered in the analyses include the sealant materials within the emplacement canister, the canister material, the sealants/concretes between the canister and the borehole wall, and the properties of some portion of the host rock itself. In particular, it is necessary to consider the moderating effects of hydrogen in the bound water in the concrete/grouts and in the brine invading the interstitial pore space of all materials external to the emplacement canister.

A considerable effort has been devoted in the present design to ensuring criticality safety of the initial emplacement configuration. Some effort has been expended on analyzing the criticality safety of accidents during the emplacement process. These results, which are briefly outlined in Section 2.2.6.3, indicate that the design has a large margin of criticality safety in the initial emplacement configuration.

1.1.1.4 Post-Closure Criticality Safety

Depending upon the circumstances, criticality of the plutonium disposed in the subsurface may become an issue after a long period of time. In contrast to nuclear waste disposal, criticality rather than the heat generation rate, will be the primary determinant of the plutonium loading in the emplaced disposal form. Among the issues that need to be addressed are: (1) the impact on criticality safety of moderation by the hydrogen in brine that will permeate the borehole and the disposal form, (2) criticality due to dissolution, transport, and precipitation/sorption scenarios, (3) criticality under earthquake disrupted emplacement geometries, (4) the consequences of post-closure criticality on borehole sealing, (5) fluid circulation in the geosphere due to criticality induced heat generation, (6) production and possible transport of fission product contaminants to the biosphere, and (7) the venting of the borehole due to complete failure of containment during a criticality event. Also, (8) the addition of neutron absorbers poisons (e.g., gadolinium, hafnium, europium, samarium, boron) as insurance against criticality and as a means of increasing plutonium loading in the disposal form without inducing criticality must be investigated. If neutron poisons are added to the disposal form for these purposes, then another issue that needs to be assessed is (9) the effect of separation of the neutron poison from the plutonium it is designed to control during disposal form dissolution, neutron poison release, and sorptive transport.

Long-Term Criticality Safety of Undisrupted Configurations

In addition to the considerations addressed in Section 1.1.1.3 regarding criticality safety at the time of initial emplacement, additional short-term, intermediate-term, and long-term scenarios will have to be considered to evaluate criticality safety under normal operating and natural event–induced accident conditions. Long-term criticality evaluations are necessary because both ^{239}Pu and its alpha-decay product ^{235}U are fissile and very long lived

(half-lives 24,400 and 7.1×10^8 yr, respectively). In particular, short-term scenarios in which the emplacement configuration remains unaltered, but the flow barriers to brine influx from the surrounding geosphere have failed, must be considered. In canistered disposal designs, due to any one of a number of possible mechanisms such as corrosion, stress-corrosion cracking, earthquake etc. even the most corrosion resistant canisters are likely to fail after a relatively short period of, say, 200 yr. This is particularly true because of the high temperature (120–150°C) and high salinity (as much as 30%) of the brines within a deep borehole. Consequently, the entire borehole, including the canister, the interstitial pore space of the concrete, the sealants, and the Pu disposal form will become saturated with brine from the external environment. The Pu disposal form and the spacing and geometric configuration of emplacement must be designed to be safe under such a scenario. The present ceramic pellet disposal concept does not employ canisters and is thus immune to these types of criticality safety problems. Furthermore, because the effective plutonium loading of the emplaced disposal form is very low, calculations indicate that no combination of physically disruptive events, short of geochemical dissolution and reconcentration, can induce criticality in any initial or disrupted configuration of the borehole.

Some effort has been devoted in the present design to ensuring long-term criticality safety of undisrupted emplacement configurations. These analyses, which are briefly outlined in Section 2.2.6.3, indicate that the design has a large margin of criticality safety in the undisrupted emplacement configuration.

Long-Term Criticality Safety of Disrupted Configurations

Furthermore, it is necessary to consider additional long-term scenarios in which the geometric configuration at emplacement is completely disrupted, the plutonium in the disposal form is redistributed either by physical rearrangement or by leaching out by brine, and additional dissolved plutonium from another location in the borehole invades and displaces the non-Pu-bearing brine within the pore space.

A moderate amount of effort has been devoted in the present design to ensuring criticality safety of disrupted emplacement configurations. These analyses, which are briefly outlined in Section 2.2.6.3, indicate that the design has a significantly large margin of safety even in disrupted configurations. However, the analyses will be extended to additional scenarios as part of the research and development program.

Long-Term Criticality Safety of Geochemical Reconcentration Scenarios

In addition to the foregoing scenarios, it is necessary to evaluate the long-term risk of criticality within the borehole or within an undetected closely spaced set of fractures in the surrounding host rock, due to *slow but continuous* leaching of plutonium from the disposal form by recirculating brine, transport into other regions, and reconcentration at one location through *slow but continuous* precipitation or sorption under different conditions of temperature and brine chemistry. The existence of sufficiently large brine flow velocities, originating from thermohaline convective instability of brine in fractures or other mechanism, would be necessary for such *geochemical reconcentration* scenarios to be of concern. However, preliminary estimates show that even moderate salinity gradients have a strongly stabilizing effect and prevent the initiation of brine circulation.

No quantitative analyses of criticality safety of the long-term geochemical reconcentration scenarios have been performed because of resource and time limitations. Because of the complexity of the coupled phenomena and the significant effort that would be required, these analyses will be deferred to the research and development program which will be undertaken in the first 5 years of the deep borehole disposition program.

1.1.1.5 Timeliness of Implementation

The primary impediment to speedy implementation of the deep borehole disposal method is the length of time required for the research, development, testing, site characterization activities (an estimated 5–10 yr), and the subsequent licensing and permitting. Once these activities are completed, preliminary cost estimates show that the deep borehole disposal facility can be rapidly built at a relatively low cost compared to other final disposition options.

1.1.1.6 Cost of Implementation

The cost of the research, development, site characterization and licensing activities can be a significant component of the overall cost. If an immobilized disposal form is adopted for enhanced proliferation resistance and dissolution resistance, then (depending on the level of plutonium loading used for criticality control) the disposal form cost may also be significant. However, the cost of an "unspiked" disposal form can be a factor approximately ten less than the cost of a disposal form that is "spiked" with radioactive waste. Furthermore, additional cost reductions can be realized by adopting canisterless deep borehole design concepts that eliminate the cost of

emplacement canisters, simplify the sealing operations, increase the volumetric efficiency of emplacement, and thereby greatly reduce the number of boreholes.

1.1.2 Long-Term Performance Strategy of the Design Concept

The long-term performance strategy of the present Coated Ceramic Pellets in Grout Immobilized Deep Borehole Disposal Facility design is as follows.

The site will be carefully selected to provide a tectonically, hydrologically, thermally, and geochemically stable host rock formation without fluid circulation at depth and having strong evidence that the fluid has remained stagnant at depth for a geologically long time. A site satisfying this criterion is likely to have the following characteristics: (1) seismic stability, (2) low geothermal gradient, (3) high salinity gradient, (4) low density of fracturing, (5) the absence of nearby active fault zones, and (6) the presence of very old undisturbed connate water.

The coated ceramic pellet disposal form is chosen to yield superior long term performance with respect to radionuclide migration to the biosphere, proliferation resistance, and criticality safety. From a radionuclide migration perspective, the ceramic pellet disposal form has very high dissolution resistance, has a dissolution surface area comparable to those expected from cracked monolithic disposal forms, it is strong and fracture resistant, and is capable of easy emplacement and sealing in place. At 1.0% Pu loading, it is dilute in plutonium concentration and thus provides a barrier against easy chemical separation into weapons-usable material. It contains neutron-absorbing chemicals in its intrinsic ceramic material and in the optional neutron poison additives that will be incorporated during immobilization. Thus it is both proliferation resistant and criticality safe.

Since metallic canisters and casings will not survive longer than a few hundred years, and the impact of corrosion products on the borehole sealants is largely unknown, neither canisters nor emplacement zone borehole casings are used in this design.

In summary, for superior long term performance, the design relies on the following:

1. The (1) natural system barrier, (2) the intrinsic dissolution resistance of a high-performance immobilized disposal form, and (3) the durability of the long seal in the isolation zone and the emplacement zone seals to ensure isolation of the emplaced radionuclides over an indefinitely long performance period.

2. Spatial dilution to subcritical plutonium loadings as the first line of defense against criticality, and with neutron absorbers incorporated as a supplementary optional second line of defense against criticality.

3. The great depth of disposal as the first barrier to proliferation, dilution within a large volume of disposal form as the second barrier, and the incorporation of neutron absorbers as the third barrier to proliferation.

4. A canisterless option to enhance borehole sealing in the emplacement zone and to eliminate the cost of canisters and the uncertainty regarding the impact of canister corrosion products on the borehole seals and the on permeability of corroded canister materials.

1.2 Deep Borehole Disposal Facility Assumptions

1.2.1 Deep Borehole Disposal Facility Capacity/Capability

The Deep Borehole Disposal Facility is assumed to be generic in design and geographic location. The disposal form is directly emplaced in the uncased bottom half of a 4 km deep borehole as ceramic coated plutonium-loaded ceramic pellets mixed with an appropriately formulated grout. The design depends upon the physical inaccessibility of the material at depth for security. The design assumes that 50 t of plutonium will be disposed of at the facility over a 10-yr period at a rate of 5 t/yr. The surge capacity (maximum possible processing rate of the facility) will be equal to double this rate. Although this is the currently assumed disposal campaign for sizing the Deep Borehole Disposal Facility, different feed rates and disposal periods can be easily accommodated by appropriately resizing the facility within the scope of the existing design concept. Such operational scenarios are presented in the *Alternative Technical Summary Report for Immobilized Disposal of Plutonium in Coated Ceramic Pellets in Grout Without Canisters* (Wijesinghe et al., 15 January, 1996).

1.2.2 Deep Borehole Disposal Facility Operating Basis

The Surface Processing and Emplacing–Borehole Sealing Process Facilities of the Deep Borehole Disposal Facility will operate 5 days/week, 8 hr/day, 250 days/yr. The Drilling Facility will operate 7 days/week, 24 hr/day in two 12-hr shifts with three drilling crews. The surge rate will be handled by introducing a second 8-hr shift in the Surface Processing and Emplacing–Borehole Sealing Facilities and adding a second drilling rig and additional crew, if needed, in the Drilling Facility.

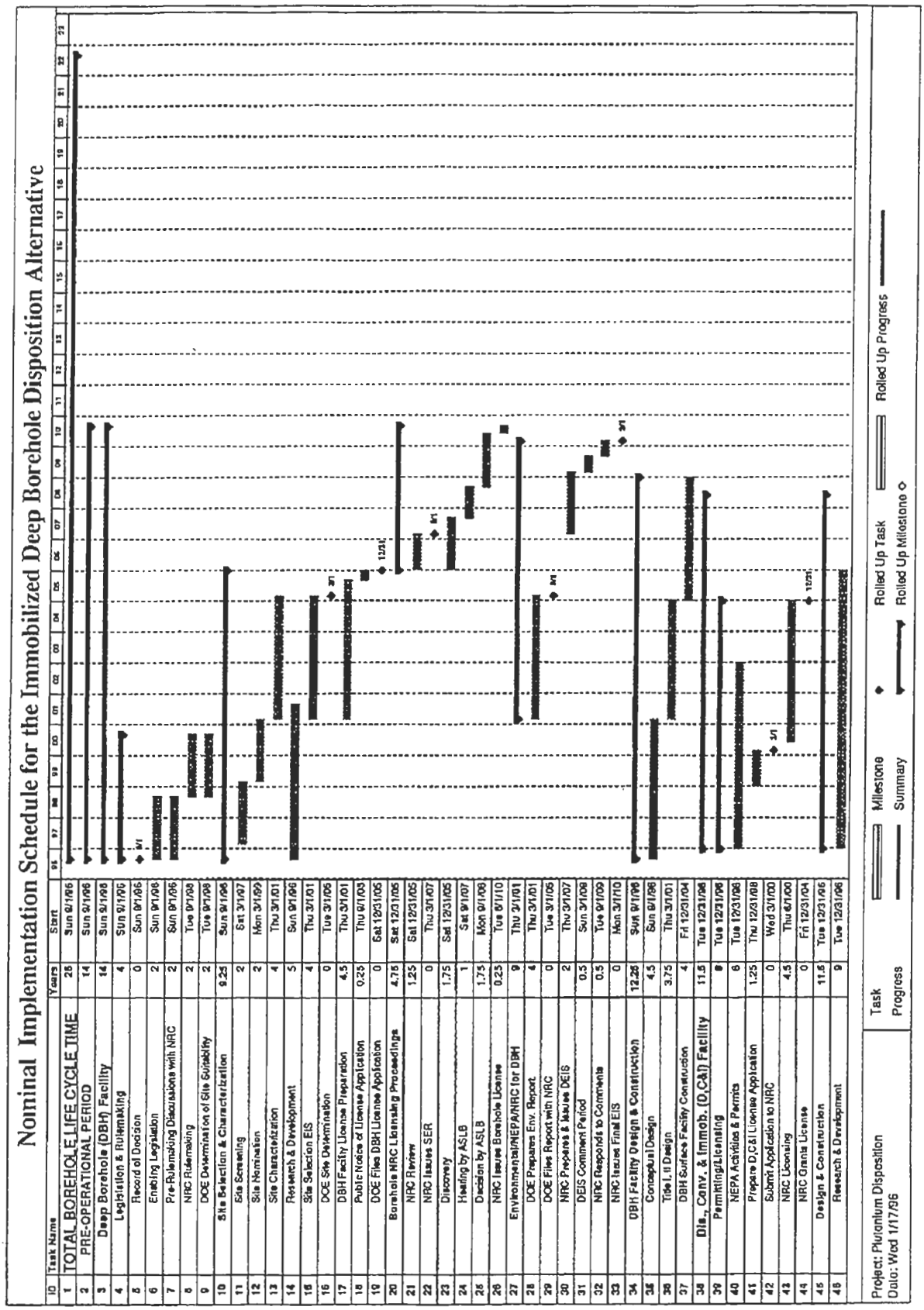

Figure 1.2.2-1. Deep Borehole Disposal Facility Overall Project Schedule.

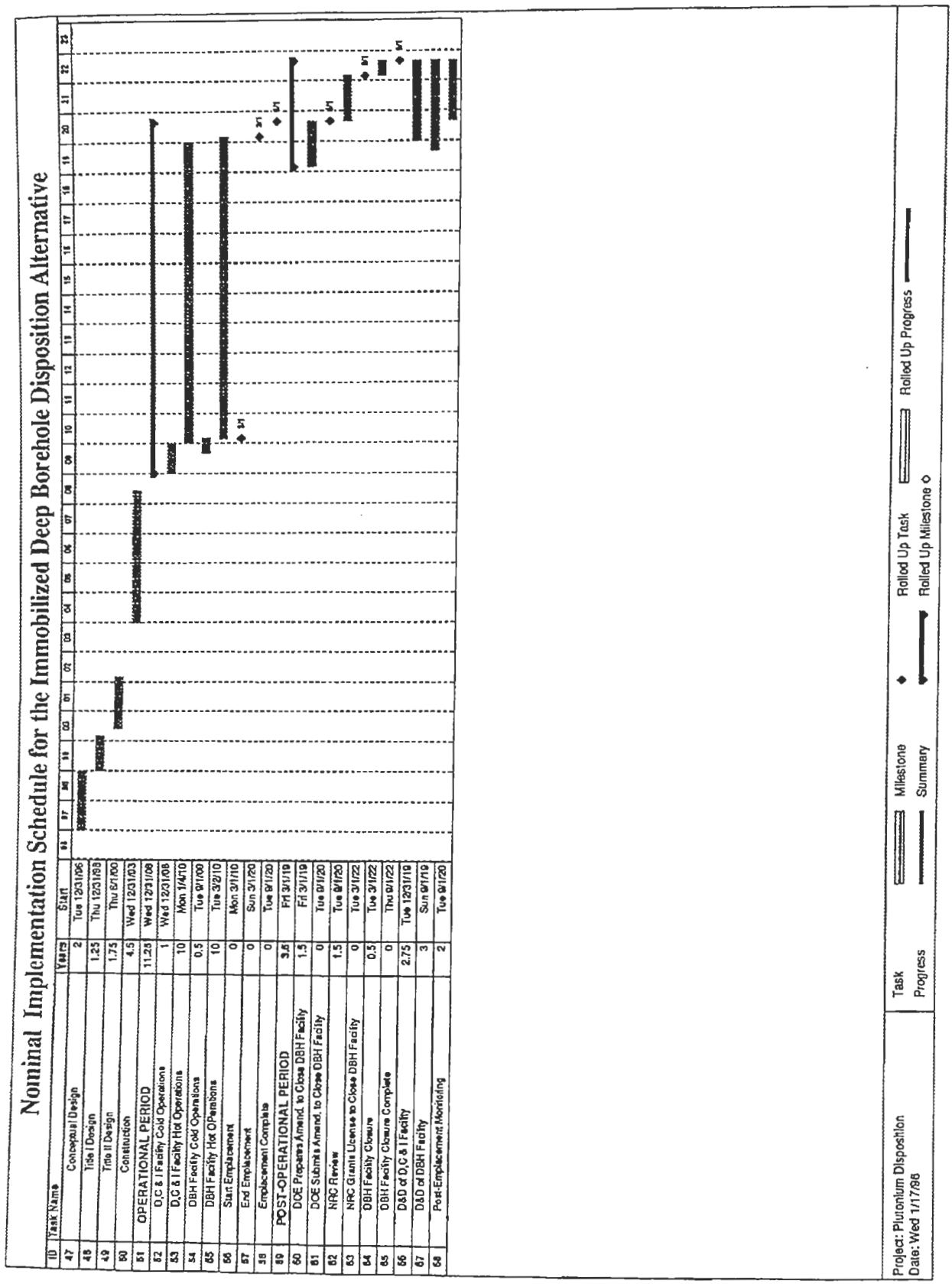

Figure 1.2.2-1. Deep Borehole Disposal Facility Overall Project Schedule (Continued).

The Implementation Schedule for the Immobilized Deep Borehole Disposition Alternative shown in Figure 1.2.2-1 shows the schedules for the Licensing & Permitting, Research & Development, Design & Construction, Operation, Closure (D&D), and Post-Closure Monitoring activities. The estimated start date is September 1, 1996. Further discussion of individual activities are presented in the following subsections.

1.2.2.1 R&D Effort

A comprehensive five-year R&D effort has been planned to support the facility design, site characterization and site selection, licensing, emplacement, and closure phases of the Deep Borehole Disposal option for the disposition of the immobilized plutonium. The areas requiring research and development are as follows:

1. Site characterization, including vertical and horizontal flow rates of brine; geochemical composition, pH, and Eh of brines at depth; temperature and salinity gradients; compositional, chemical, hydrological, thermal, and mechanical properties of host rock at depth; characterization of fracture distribution and properties; borehole logging, surface seismic and cross-borehole acoustic/electrical tomographic imaging for definition of geologic structure and rock properties; cross-borehole pressure and tracer tests for hydrologic characterization; tectonic and seismic stability of the geologic formation.

2. Field technologies, including drilling methods; borehole accuracy, deformation, and stability; sealing technologies for undercut emplacement zone seals, isolation zone sealing and sealing fractures; mixing of the Pu disposal form with grout; emplacement methodology for the pellet–grout mixture; surface and subsurface handling of Pu-loaded ceramic pellets; quality assurance for subsurface operations.

3. Downhole materials performance, including disposal form dissolution and leaching at deep borehole conditions; solubility of Pu in brine at depth; transport properties of Pu in host rock and the pathway to biosphere; durability, selection, and performance of grouting/sealing materials; effects of radiolysis on downhole materials; criticality related properties of disposal forms, grouts, brines, and host rock.

4. Post-closure phase performance assessments, including mechanisms for initiation of fluid flow; transport of Pu and daughter products in the borehole and host rock and along pathways towards the biosphere; Pu release rate from the disposal form; Pu reconcentration mechanisms and evaluation of long-term criticality risk; borehole integrity; grout durability and performance; ES&H, criticality, and proliferation risk assessments; natural analog studies of naturally occurring geologic reactors to support long-term performance predictions; integrated systems level performance; cost analyses for design optimization.

These research and development needs would be addressed in a five-year plan, geared to the following:

1. *Acquiring the required field data* on the conditions at large subsurface depths through an experimental site characterization program at a typical site.

2. *Extending and specializing existing performance analysis models or developing new models* for coupled fluid flow, reactive fissile material transport, disposal form dissolution and fissile material release, downhole short- and long-term criticality assessments, geomechanical analyses, ES&H and proliferation risk assessments, and cost analysis to the deep borehole application.

3. *Acquiring unavailable data* required by the above predictive models through laboratory and field experiments that simulate downhole conditions.

4. *Developing the required engineering and operations technologies* required to safely and efficiently implement the site characterization, drilling, emplacing, borehole sealing, and remote monitoring activities associated with construction, operation, and post-closure performance of a Deep Borehole Disposal Facility.

5. *Performing the long term performance, risk, and cost assessments* required to support the facility design and licensing activities.

6. *Demonstrating the developed drilling, emplacement, and sealing technologies* through a pilot large diameter deep borehole field demonstration.

This R&D Program would begin at the start of the deep borehole disposition program in September 1996 and would continue for five years until September 2001, as shown in the Implementation Schedule in Figure 1.2.2-1.

1.2.2.2 Permitting and Licensing Schedule

The establishment of a regulatory basis for the disposal of excess special nuclear material is necessary prior to obtaining permits and licenses for the deep borehole project. The regulatory basis may requires 4 yr to synthesize the regulations, give public notice, and conduct all the public hearings that are part of the process. It is expected to begin at the start of the deep borehole disposition program in September 1996 and to continue until September 2000.

From the time that the regulations are established, the permitting and licensing schedule will require an additional 5 yr to certify the site. This includes the production of a site specific Environmental Impact Statement (EIS), the holding of public hearings and certifying that the site will meet the design and performance criteria necessary to meet the regulations and satisfy the mitigations given in the EIS. The Site Selection and Characterization in support of this activity will begin in September 1996 at the beginning of the deep borehole disposition program and will culminate with DOE's filing of the deep borehole disposal facility license application in December 2005. This will be followed by the license review and approval process that includes review by the Nuclear Regulatory Commission (NRC), public hearings and decision making by the Atomic Safety Licensing Board (ASLB) culminating in the NRC issuing a license to construct and operate the facility in March 2010.

1.2.2.3 Construction, Operation, Closure, and Post-Closure Schedules

The Implementation Schedule to deploy, operate, and decommission the borehole disposal facility is presented in Figure 1.2.2-1. As indicated in this schedule, conceptual design of the deep borehole disposal facility begins at the start of the deep borehole disposition program in September 1996 and continues until April 2001. The conceptual design is required for the preparation of the EIS by the DOE. Title I design begins at the same time as the preparation of the site specific EIS. Title I & II (preliminary and detailed design) is estimated to require approximately 3.75 yr to complete. This will allow construction to start in December 2004. The construction is estimated to require about 4 yr leading to start of operations of the facility in September 2009.

After initial preparation and drilling, emplacement operations are assumed to start in April 2010, continue for 10 yr, and be complete by April 2020. Decontamination and decommissioning of the facility is estimated to require approximately 3 yr resulting in an overall program completion date of September 2022.

The emplacement operations for this option could be accelerated and completed in 3 yr if the Pu final form material could be all shipped to the borehole site within that period. This will accelerate the overall program completion date to June 2016.

1.2.3 Compliance

1.2.3.1 Rules, Regulations, Codes, and Guidelines

The regulations that cover the requirements that must be met for the disposal of Surplus Nuclear Materials in a Deep Borehole Disposal Facility address a wide variety of issues. These issues include transportation, operation of the Surface Processing Facility, emplacement and sealing of the boreholes, closure of the facility, post-closure performance, and possibly post-closure monitoring.

Existing regulations that could apply to the development of regulations for a Deep Borehole Disposal Facility are summarized in Figure 1.2.3.1-1. The off-site transportation of excess nuclear material will be covered by 49 CFR 173.7 for U.S. Government material, with 49 CFR 173, Subpart I, for radioactive materials. The packaging will be certified to be in conformance with 10 CFR 71. The transportation of the material will conform to the IAEA Safety Series No. 6 and to the additional requirements for the shipment of plutonium given in 10 CFR 71. The Safeguards and Security for offsite shipments must conform to 10 CFR 73.26.

The on-site activities must conform to the procedure rules given in 10 CFR 820. The nuclear safety management at the site will conform to the use in the proposed 10 CFR 830 regulation. The occupational radiation protection will conform to 10 CFR 835. The quality assurance program will be similar to 10 CFR 60 Subpart G, which will form the basis for the QA program for the facility.

1.2.3.2 Safeguards and Security

Safeguards and security protection for the disposition of excess special nuclear material are assumed to conform to the applicable sections of DOE 5630 series orders or their appropriate future alternatives.

1.2.3.3 Environmental, Safety, and Health (ES&H)

The various areas of ES&H that are of significant concern for the deep borehole facility include the contamination of water by the processing of the excess plutonium as well as exceeding the allowable concentration of

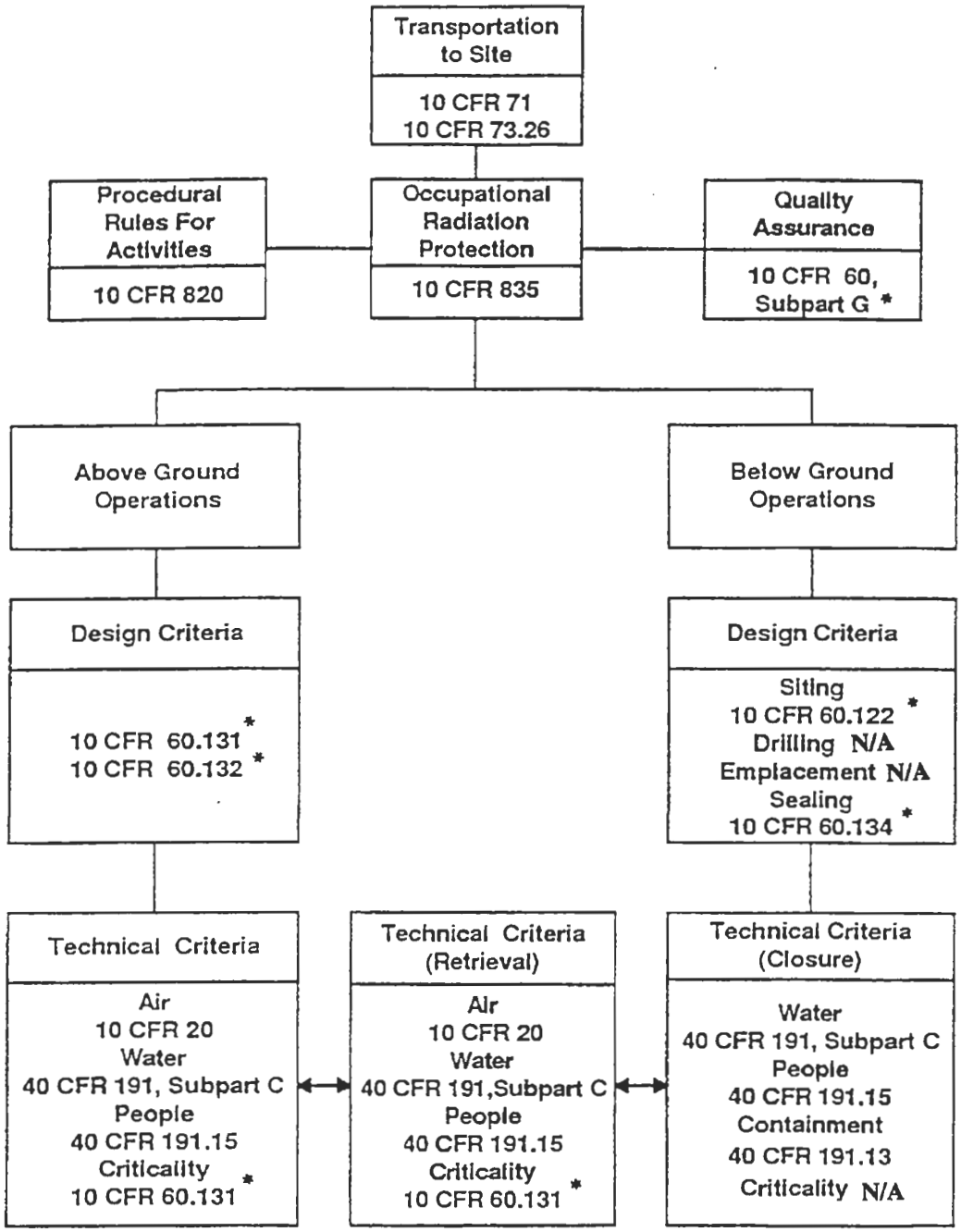

* **Mission-Specific Regulations Need to be Developed in These Areas**

Figure 1.2.3.1-1. Existing Regulations that May Apply to a Deep Borehole Disposal Facility.

plutonium in the air at the site. The national primary drinking water regulations and implementation given in 40 CFR 141 and 40 CFR 142 shall be adhered to. The standards for protection against radiation are given in 10 CFR 20 for the concentration of plutonium in air and water. In addition, the processing of plutonium may produce wastes that will require disposal. The introduction of any hazardous wastes into the waste stream or the feed stream must be minimized. Hazardous wastes are listed in 40 CFR 261.31 through 40 CFR 261.33. Any other waste must be characterized by tests described in 40 CFR 261.20 through 40 CFR 261.24 to determine if the waste is hazardous.

1.2.3.4 Buffer Zones

For the purpose of preparing this document, no site-specific data can be given because no specific site has been selected. Instead, the data provided is for a generic example site (see Section 3). A site map for the Deep Disposal Facility, showing a buffer zone, is presented later in Figure 3.1.7-1. The overall site with a four-hole Borehole Array at 500 m (1,640 ft) hole spacing occupies a land area of 2,041 hectares (5,044 acres) of which 32 hectares (78 acres) is occupied by the Main Facility, 25 hectares (62 acres) by the Borehole Array, and 1,873 hectares (4,628 acres) by the Buffer Zone. The site dimensions are as follows: entire site 4,447 m × 4,590 m (14,590 ft × 15,060 ft), Main Facility 229 m × 1,067 m (750 ft × 3,500 ft), and Borehole Array 500 m × 500 m (1,640 ft × 1,640 ft). This drawing depicts a representative arrangement of facility buildings and site support areas anticipated for the Deep Borehole Disposal Facility for immobilized disposition.

1.2.3.5 Decontamination and Decommissioning

At the time of closure, the facility will contain residuals of plutonium plus other waste produced during the processing of the plutonium at the site. The waste may consist of TRU waste to be disposed of in the WIPP facility. For concentration of plutonium less than 100 nCi per gram, the TRU waste may be eligible for land disposal licensed to 10 CFR 61. Radioactive waste management must conform to DOE Order 5820.2A.

1.2.3.6 Non–Safety/Safety Class

A graded approach may be used to identify components that are important to safety. Components that have a major impact on safety will have different design cri than components having only a minor impact on sa This approach is used in the nuclear power industry w the section of the ASME code used in the design is de dent on the function (and importance to safety) of the c ponent. The design of structures, systems, and compon important to safety shall conform to mission-specific r lations to be established similar to 10 CFR 60.131(b)

1.2.3.7 Toxicological/Radiological Exposu

The toxicological/radiation exposure during const tion will be controlled by the EPA and OSHA. The S Drinking Water Act and the Clean Air Act will regu the quality of water and air at the site during construc and operation.

The technical criteria for the allowable radionuc activity in air and water are given in 10 CFR 20. The en ronmental standards for the ground water are giver 40 CFR 191, Subpart A. The long term individual prot tion requirements are given in 40 CFR 191.15. NESH (40 CFR Part 61, Section 112) dose exposure limits t member of the general public are 10 mrem/yr from fa ity operations. The average dose to the population fr natural background sources is 300 mrem/yr.

The operation area shall be designed so that until p manent closure has been completed, radiation exposu radiation levels, and releases of radioactive materials unrestricted areas will at all times be maintained wit the limits specified in 10 CFR 20.

Surface facility ventilation and radiation control a monitoring should be consistent with 10 CFR 60.132 and (c).

1.2.3.8 Waste Management

Radioactive waste treatment facilities shall be c signed to process any radioactive wastes generated at t facility operations area into a form suitable to permit s disposal at the site or to permit safe transportation a conversion to a form suitable for disposal at an alternati site in accordance with applicable regulations.

2. DEEP BOREHOLE DISPOSAL FACILITY DESCRIPTION

2.1 General Facility Description

2.1.1 Functional Description

The Deep Borehole Direct Disposal Facility Option supports the Fissile Materials Disposition Program by providing a permanent disposal option for excess weapons plutonium through emplacement in deep boreholes. This facility is a stand-alone plant that receives feed material as plutonium immobilized in a ceramic disposal form. The feed ceramic disposal form will be delivered in transportation containers to the receiving and storage building at the Main Facility. The transportation containers will be transported to the facility by truck or by rail with safeguards and security appropriate to the transportation of plutonium in this disposal form.

The functional elements of the envisaged Deep Borehole Facility are shown in Figure 2.1.1-1. The Deep Borehole Disposal Facility consists of a Surface Processing Facility for receiving and storing the disposal form in transportation shipping containers until they are required for emplacement; a drilling facility for drilling the borehole and casing and sealing hydraulically conductive features in the host rock; an Emplacing–Borehole Sealing Facility for preparing the coated ceramic pellet–grout mix and emplacing it within the borehole, and sealing the borehole; and a Waste Management Facility for treating the wastes generated by the borehole disposal operations. In addition, there is a Support Facility consisting of the Administration, Plant Operations, and Balance-of-Plant facilities. The Balance-of-Plant facilities include Security, Safety, and Decontamination Systems, General Shipping and Receiving, Central Warehouse, Maintenance, Electrical Power Plant, ES&H Center, Medical Center, Fire Station, Personnel Services, Water and Fuel Supply Systems, Process Steam and Gas Supply Systems, Training, and Laundries for Contaminated and Uncontaminated clothing.

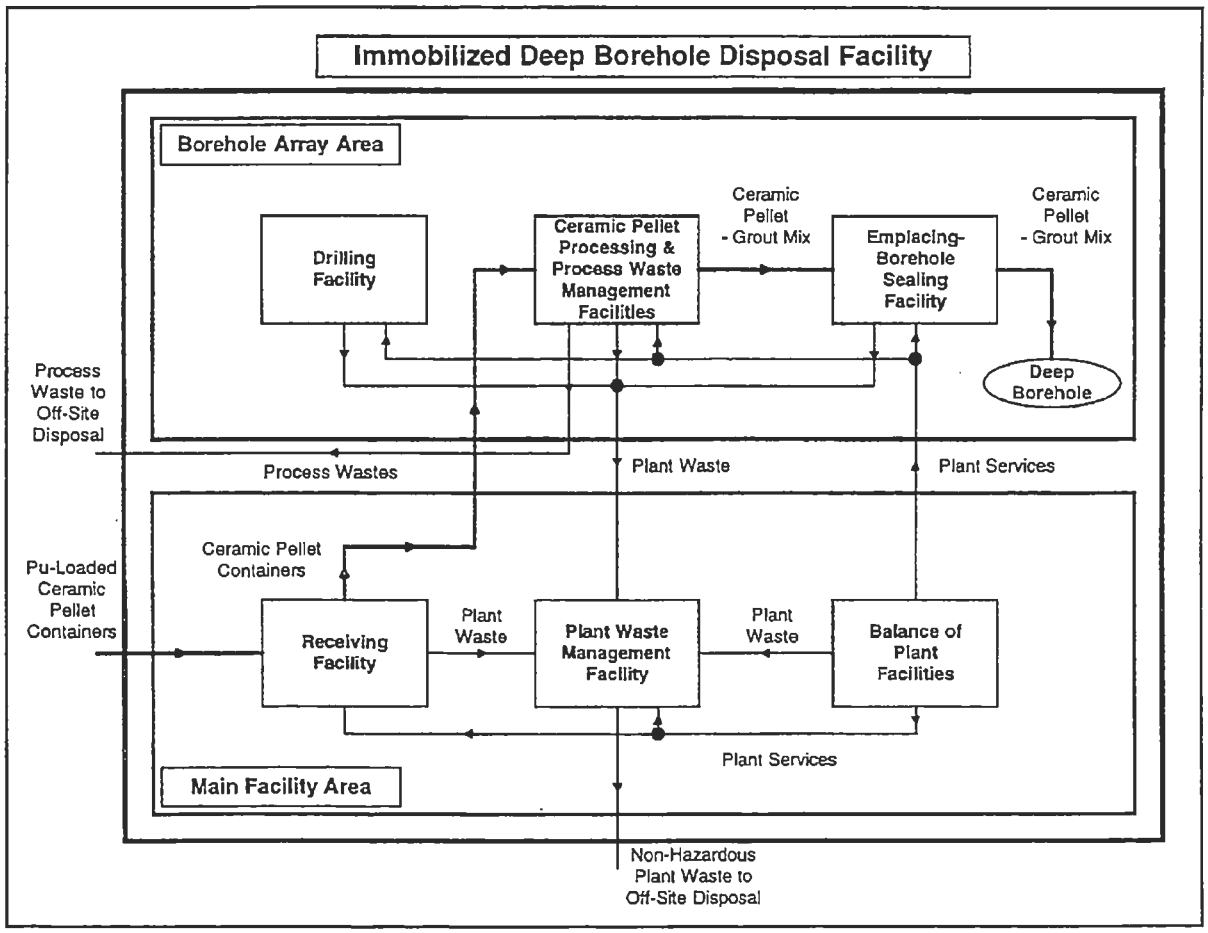

Figure 2.1.1-1. Deep Borehole Disposal Facility Flow Diagram.

The ceramic disposal form transportation containers that are delivered at the Deep Borehole Disposal Facility are inspected and stored in the Surface Processing Facility. Except for inspection, no processing of fissile materials is done at the Main Facility. Instead, all processing operations are located in relocatable buildings at the Emplacing–Borehole Sealing Facility. However, because the pellets are coated with a durable non-Pu-bearing ceramic material, under normal operation conditions, there will only be a small amount of radioactive cont from broken or damaged pellets. The plutoniu level of the ceramic pellets, inspection and sto Main Facility, and the emplacing operations at hole Array are designed to prevent criticality du operations. The deep borehole design sizing p for the disposal of 50 t of plutonium in four d holes are summarized in Table 2.1.1-1.

Table 2.1.1-1. Deep Borehole Disposal Facility Design Sizing Parameters.

Design Parameters	Value	Unit
Geometric Parameters		
Borehole diam (2–3 km)	0.91 (36)	m (in.)
Borehole diam (3–4 km)	0.66 (26)	m (in.)
Emplacement zone height	2	km
Masses & Volumes		
Density of ceramic disposal form	4,000	kg/m^3
Volume fraction of ceramic pellets	0.60	
Empl. zone volume/borehole	1,028	m^3
Volume of grout/borehole	411	m^3
Volume of ceramic/borehole	617	m^3
Mass of ceramic/borehole	2,468	t
Isolat. zone grout vol/borehole	1,538	m^3
Rock volume removed/borehole	3,339	m^3
Borehole drilling criterion	15.00	%
Total Pu mass to be disposed	**50.00**	t
Borehole Emplacement Design		
Pu linear loading	6.1	kg/m
Mass of Pu/borehole	**12.34**	t
# Boreholes (exact)	**4.05**	
# Boreholes (rounded)	**4**	
Actual Pu disposal capacity	**49.36**	
Total ceramic mass (4 holes)	**9,873**	t
Total empl. zone seal grout (4 holes)	**0.0**	m^3
Total isolation zone grout (4 holes)	**6,154**	m^3
Total empl. pellet mix grout (4 holes)	**1,645**	m^3
Total empl.+isolat. grout (4 holes)	**7,798**	m^3
Total rock removed (4 holes)	**13,357**	m^3
Pu loading of ceramic pellets (mass)	1.0	%
Effective Pu loading of pellets	**0.5**	%
Criticality coeff.(1),(2) Gd:Pu = 0.0	**0.69**	
Criticality coeff.(1) Gd:Pu = 0.1	**0.53**	
Criticality coeff.(1) Gd:Pu = 1.0	**0.37**	

(1) For ceramic pellet–grout–brine mixture in borehole, for added Gd moles to Pu moles.

(2) Design condition (no addition/presence of gadolinium).

The Borehole Array Area contains the deep boreholes in which the coated ceramic pellets will be mixed with grout and emplaced without canisters. The deep boreholes are drilled by a relocatable drilling facility that moves from one drill site to another as the boreholes are drilled in sequence. The boreholes are typically 4 km in depth and decrease in diameter with depth in a stepwise fashion. The Drilling Facility drills the boreholes and seals permeable zones, fractures, and near-field drilling-induced damage zones in the rock formations as they are encountered. It also installs several well casings of decreasing diameter with depth and cements the spaces between the casing and the borehole wall with cement grout. The lower 2 km of the boreholes, comprising the emplacement zone, will be located in competent host rock and will not be cased.

A separate relocatable Emplacing–Borehole Sealing Facility will emplace ceramic pellets as a concrete mix in the boreholes in the sequence in which the boreholes are drilled. The duration of emplacement operations will depend on the schedule of delivery of disposal form feed material to deep borehole facility. An accelerated delivery schedule may require additional Drilling and Emplacing–Borehole Sealing Facilities.

2.1.2 Deep Borehole Disposal Facility Plot Plan

Figure 2.1.2-1 shows a general plot plan for the Deep Borehole Disposal Facility. Detailed descriptions of individual buildings are provided in Section 2.1.3. The size, number, and arrangement of facility buildings is conceptual, and the plot plan conveys general layout information only.

The Site Plan of the Deep Borehole Disposal Facility given in Figure 2.1.2-2 shows in detail the layout of the facility in both the Main Facility and Borehole Array Areas. It also shows the access routes for off-site transportation and the two on-site transportation routes for trucks bearing plutonium. Figure 3.1.7-1 shows the Security Boundaries and Buffer Zone Surrounding the Facility. It also shows the 4 boreholes required by this design and the spacing between the boreholes in the array.

For the purpose of preparing this document no site-specific data can be given for an actual site because no specific site has been selected. Instead, the data provided is for a generic example site. The generic site description is given in Section 3, together with a generic site area map (Figure 3.1.1-1), a hydrogeologic cross section of the subsurface at the site (Figure 3.1.5-1), and a generic site plan (Figure 3.1.7-1). The general features of the facility site are a Main Facility comprising a Surface Processing Facility, administration buildings, and other support facilities in the southern part, and a Borehole Array area with the Drilling and Emplacing–Borehole Sealing Facilities located in the northern part of the site. The surface processing and waste treatment areas in the southeast quarter of the facility are located as far as possible from the administration and personnel services areas located in the southwest quarter. The railway and truck road connections are from the southeast with ready access to the plutonium receiving area of the Surface Processing Facility, the warehouses and the drilling materials laydown area; passenger traffic access is from the southwest of the site. The roads have been routed to provide unrestricted access to truck traffic plying between the Surface Processing Facility, the drilling materials laydown area, and the Borehole Array while avoiding the administration and personnel services areas with passenger traffic.

The Site Map in Figure 3.1.7-1 also shows security boundaries: the Protected Areas (PA), the Limited Areas (LA), and the Property Protection Areas (PPA) of the Deep Borehole Disposal Facility. The Surface Processing Facility in which plutonium is received and stored and the Emplacing–Borehole Sealing Facility to which the ceramic pellets are brought from the Surface Processing Facility are within separate Protected Areas (PA). Each PA is secured with a double fence and intruder detection systems. The PA and operations involving classified materials are contained within the Limited Area (LA). The (PPA) bounded by the Site Perimeter Fence surrounds the LA and includes a 1.6-km-wide (1-mile) buffer zone surrounding the facility. The passenger vehicle parking and passenger services (e.g., cafeteria, training) facilities are located outside the LA but within the PPA. Access to the site is controlled at the guardhouses located at both the Site Perimeter Fence and at the Security Fence surrounding the LA and PA areas of the Main Facility. Passenger traffic to the Main Facility is controlled at the east gates while rail and truck traffic are controlled at the west gates. Access to the Borehole Array, which is located entirely within the LA, is only permitted to traffic arriving from the Main Facility area. Access to the Surface Processing Facility and the Emplacing–Borehole Sealing Facility is controlled at guardhouses located at the Protected Area (PA) perimeter fences surrounding these two facilities.

A Ventilation Exhaust Stack discharges ventilation air from the Receiving and Processing Building comprising the Surface Processing Facility and from the Process Waste Treatment System in the Waste Treatment Building. Other sources of airborne emissions at the site are the Boiler Stack at the Support Utilities Building and the HVAC exhaust outlets from the non–process support buildings. All non-process liquid effluents from the site are treated in the Sanitary and Utility Waste Treatment Systems in the Waste Treatment Building.

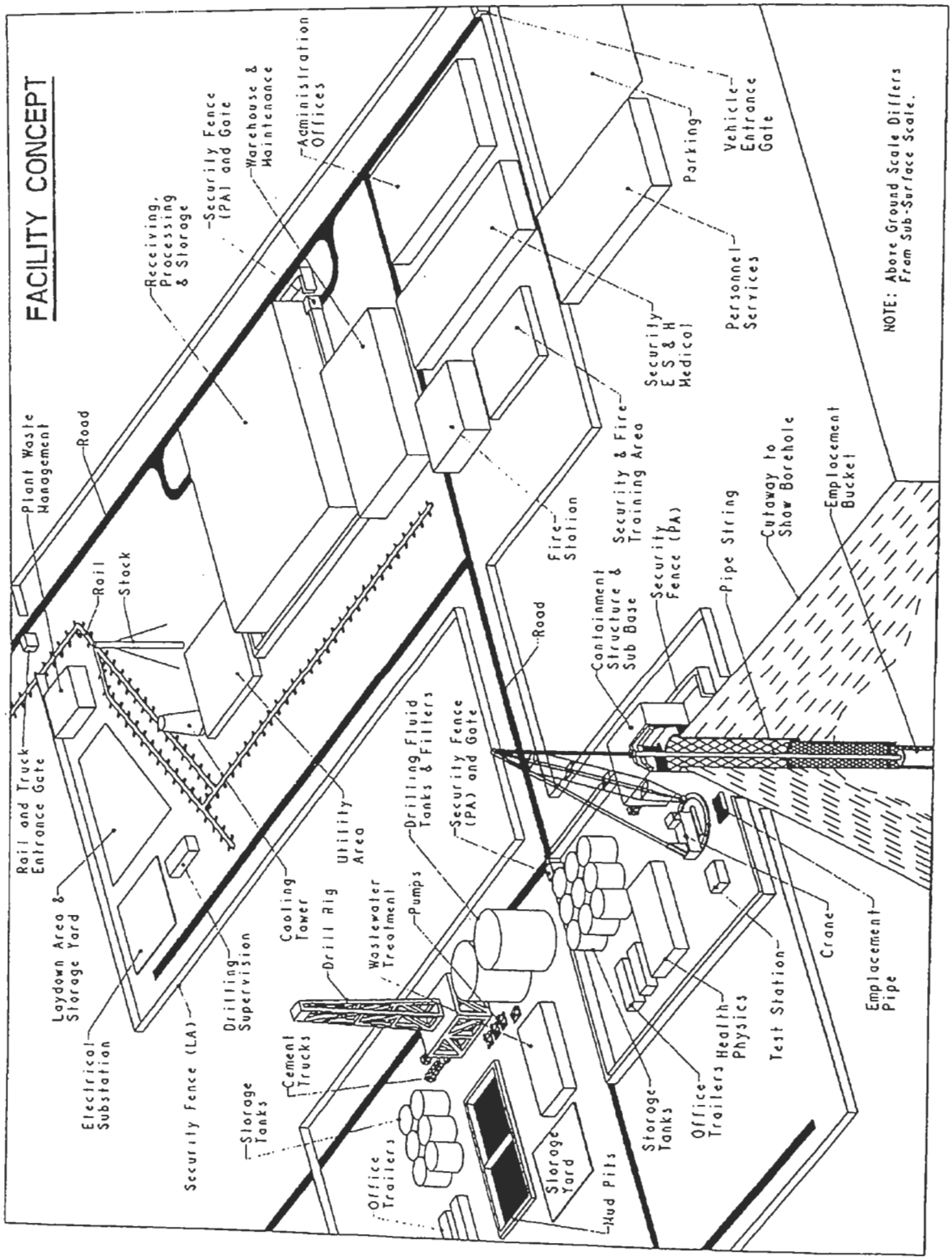

Figure 2.1.2-1. Perspective View of the Deep Borehole Disposal Facility.

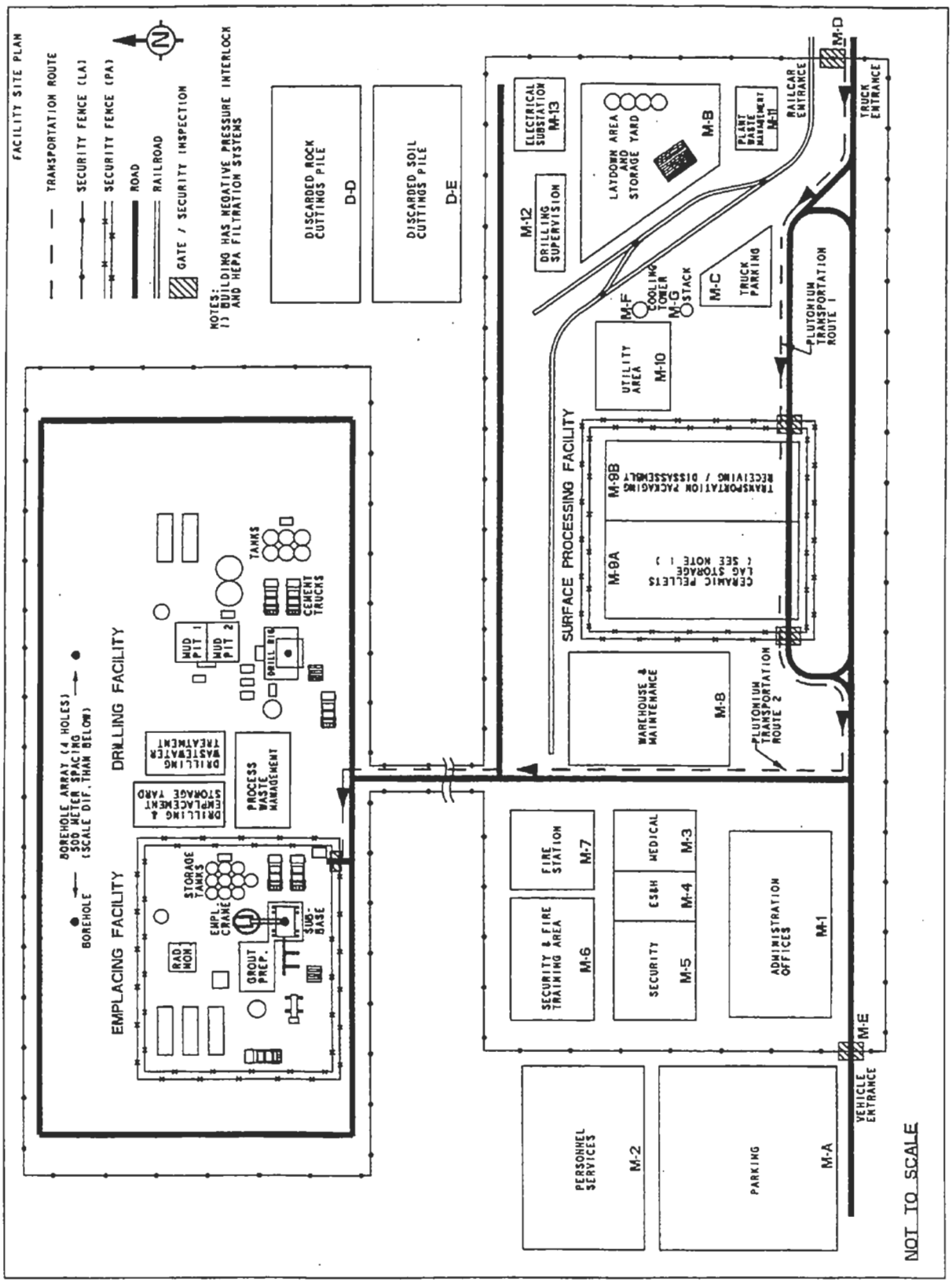

Figure 2.1.2-2. Deep Borehole Disposal Facility Site Plan Detail and Plutonium Transportation Routes.

Under normal operating conditions, there will be no significant atmospheric emissions from the Deep Borehole Disposal Facility. However, for safety, two radiation and air-quality monitoring towers will be installed at the site. In addition, the groundwater will be periodically sampled, in both on-site and distant off-site monitoring wells, and analyzed for radioactivity emanating from the surface facilities and from the disposal form emplaced in the deep boreholes. Certain of these wells may continue to be monitored for a few years beyond closure to verify satisfactory performance in the initial part of the post-closure performance period.

2.1.3 Building Descriptions

The Deep Borehole Disposal Facility will with site-specific design criteria to comply w ders and applicable NRC regulations covering construction, and safety of non-nuclear reacto facilities. The facility will incorporate the s rity, and environmental protection consider quired by DOE orders and applicable NR regulations. Facility data is presented in Table the buildings are described in the following sub

Table 2.1.3-1. Deep Borehole Disposal Facility Data.

Building Name	Building Code	Footprint (m^2)	Number of Levels	Special SNM Materials	Const Ty
Main Area Facilities					
Administration	M-1	1,394	1	None	Light
Personnel Services	M-2	1,394	1	None	Light
Medical Center	M-3	929	1	None	Light
ES&H	M-4	929	1	None	Light
Security Center	M-5	1,858	1	None	Light
Security & Fire Training Area	M-6	929	1	None	Open
Fire Station	M-7	929	1	None	Light
Warehouse and Maintenance	M-8	2,323	1	None	Light Fra
Receiving and Processing	M-9	5,295	2	SNM	Con
Plant Utilities	M-10	929	1	None	Mas
Process Waste Management	M-11	1,742	1	SNM, SNM Wastes	Con
Drilling and Emplacing Operations Center	M-12	929	1	None	Light Fra
Electrical Substation	M-13	650	1	None	Concr
Plant Waste Management	M-14	650	1	None	Light Fra
Employee Parking	M-A	2,323	1	None	Asp
Laydown Area & Storage Yard	M-B	5,574	1	None	Open
Truck Parking	M-C	929		None	Asp
Truck & Rail Security Portals	M-D	28	1	None	Mas
Passenger Vehicle Portal	M-E	47	1	None	Mas
Cooling Tower	M-F	743		None	St
Gas Stack	M-G	37		None	St

Table 2.1.3-1. Deep Borehole Disposal Facility Data (Continued).

Building Name	Building Code	Footprint (m^2)	Number of Levels	Special SNM Materials	Construction Type
Drilling Facilities		46,450			
Drill Rig	D-1	1,858	1	None	Steel Frame
Drilling Shift Office Trailers	D-2	1,858	1	None	Trailer
Cement Trucks	D-3	139	1	None	Vehicles
Cement & Water Storage Tanks	D-4	465	1	None	Steel Tanks
Compressor Station	D-5	47	1	None	Concrete Pad
Potable Water Tank	D-6	47	1	None	Stainless Steel
Drilling Fluid Tanks	D-7	465	1	None	Steel
Treated Water Storage	D-8	3,716	1	None	Steel, concrete
Generator Truck	D-9	70	1	None	Vehicle
Drilling & Emplacing Storage Yard	D-A	929	1	None	Concrete
Drilling Wastewater Treatment	D-B	186	1	None	Steel Frame
Drilling Mud Pits	D-C	7,432	1	None	Earth
Mud & Water Pumps	D-D	47	1	None	Concrete Pads
Pipe Storage	D-E	186	1	None	Packed Earth
Emplacing Facilities		46,450			
Emplacing Crane	E-1	1,858	1	None	Steel Frame
Radiation Monitoring	E-4	93	1	None	Light Steel Frame
Containment Structure	E-5	279	1	SNM Waste	Heavy Steel Enclosure
Emplacing Sub-Base	E-6	186	1	SNM Waste	Steel Frame
Emplacing Shift Office Trailers	E-7	1,858	1	None	Trailer
Storage Tanks	E-8	186	1	SNM Waste	Steel
Compressor Station	E-9	47	1	SNM Waste	Concrete Pad
Generator Truck	E-10	70	1	SNM Waste	Earth
Cement Trucks	E-11	139	1	SNM Waste	Earth
Potable Water Tank	E-12	47	1	SNM Waste	Steel
Pipe Handling Crane	E-13	139	1	SNM Waste	Packed Earth
Process Water Storage	E-14	93	1	SNM Waste	Steel Tank
Waste Monitoring & Testing Station	E-15	47	1	SNM Waste	Light Steel Frame
Entrance Security Portal	E-16	9.3	1	None	Masonry

2.1.3.1 Receiving and Processing

A Surface Processing Facility for receiving the coated ceramic pellet disposal form from an off-site immobilization facility, inspecting and accounting for received material, and storing the received Pu-loaded pellets is provided in the Main Facility Area. The plot plan of this Receiving Sub-Facility is given in Figure 2.1.3.1-1. In addition to this receiving sub-facility, a processing facility is required to mix the ceramic pellets with the grout in the Emplacing–Borehole Sealing Facility Area. The plot plan of this Ceramic Pellet–Grout Mix Preparation Emplacing Sub-Facility that is located in the Borehole Array Area is given in Figure 2.1.3.1-2.

2.1.3.2 Waste Management

A Process Waste Management Facility is provided for treating the Process Radwastes and Process Wastewater in the Borehole Array Area. These wastes are generated by the borehole disposal operations. In addition, a Plant Waste Management Facility is provided in the Main Facility Area to handle Utility and Sanitary Wastes. A plot plan of the Process Waste Management Facility is giv in Figure 2.1.3.2-1.

2.1.3.3 Administration

The Administration building houses administrati and engineering offices, a central records storage are meeting and conference rooms, and Human Resourc offices. It also houses accounting and computer faciliti used for administrative/payroll operations and records sto age, a control mail facility, a public information displa and miscellaneous storage and service areas.

2.1.3.4 Personnel Services

The personnel services building is a single-story struc ture that houses a cafeteria and a multipurpose trainin facility.

The major functional areas of the cafeteria are the din ing room, scramble-type serving area, dish washing area food receiving, storage, staging, preparation area, and a waste handling area. The cafeteria is operated by a privat commercial vendor and is capable of 24-hr operation.

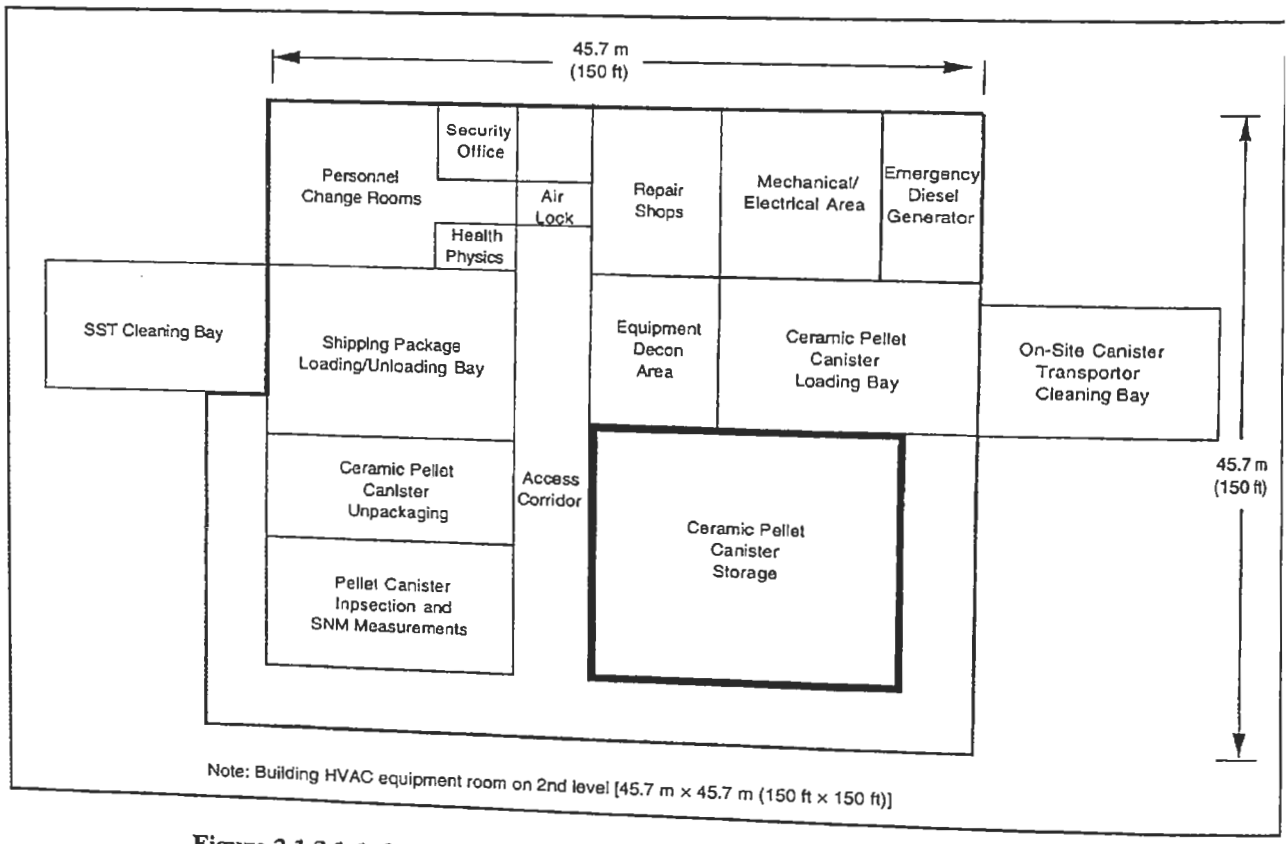

Figure 2.1.3.1-1. Surface Processing Facility Receiving Sub-Facility Plot Plan.

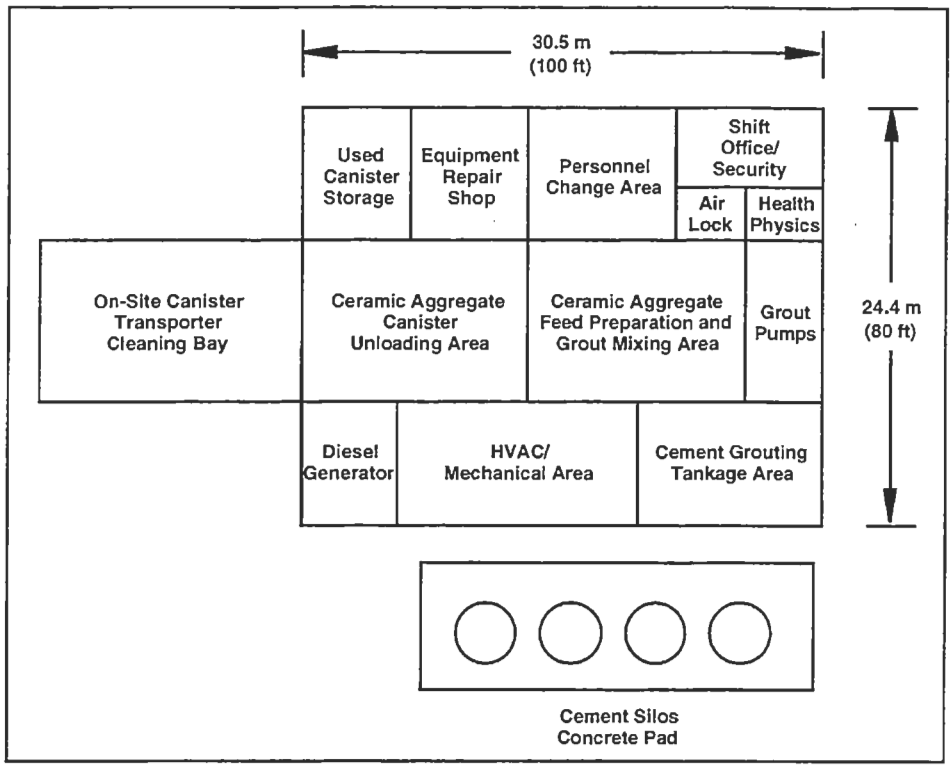

Figure 2.1.3.1-2. Emplacing–Borehole Sealing Facility—Pellet Grout Mixing Sub-Facility Plot Plan.

The major functional area of the training facility includes several multi-use training rooms and equipment storage rooms. Additional training areas are available in the dining areas of the cafeteria during off hours.

2.1.3.5 Central Warehouse

The Central Warehouse is a metal building attached to Central Shipping and Receiving. The Central Warehouse is provided for storage of equipment, parts, and other plant supplies required for routine use.

A HEPA filter testing area will be included to provide for storage and testing of HEPA filters and storage of respirator cartridges.

The Deep Borehole Disposal Facility will be designed with site-specific design criteria to comply with DOE orders and applicable NRC regulations covering the design, construction, and safety of non-nuclear reactor plutonium facilities. The facility will incorporate the safety, security, and environmental protection considerations as required by DOE orders and applicable NRC and EPA regulations. Facility data is presented in Table 2.1.3-1, and the buildings are described in the following subsections.

2.1.3.6 Drilling and Emplacing–Borehole Sealing Operations Center

The Drilling and Emplacing–Borehole Sealing Operations Center located in the northeast corner of the main facility area provides a consolidated area for control of the Drilling and Emplacing–Borehole Sealing activities of the facility. This center contains electronic data systems that support monitoring and control of the Drilling and Emplacing–Borehole Sealing systems and support facilities that are considered vital to the safety and security of these facilities. The center is manned by the Drilling Shift Superintendent and the Emplacing–Borehole Sealing Shift Superintendent. Their responsibilities include management of all emergency situations and overall management and coordination of activities in their respective facility areas of the borehole array.

2.1.3.7 Plant Utilities

Electrical Power

The electrical load for the total facility is approximately 5 MVA and is supplied from an electrical utility via a high-voltage transmission line. This line terminates

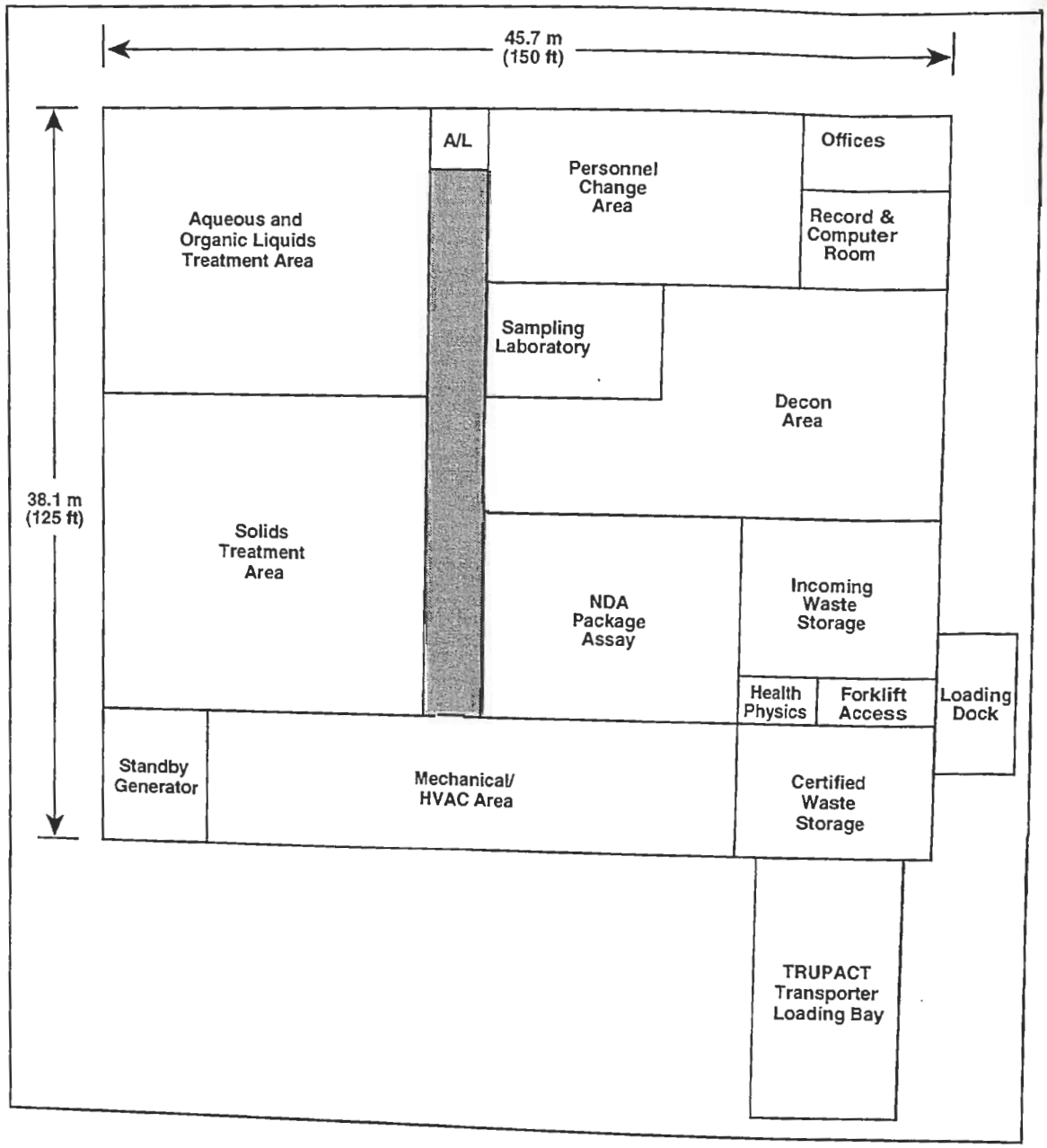

Figure 2.1.3.2-1. Process Waste Management Facility Plot Plan.

in an electrical power switchyard, located in the northeast corner of the main facility area, where the voltage is transformed to facility distribution levels. Power is provided to the borehole array area by low voltage overhead lines.

High-voltage buses within the Electrical Substation are installed overhead on steel or concrete structures. Surge voltage protection equipment, potential transformers, current transformers, and equipment for relaying and metering are installed on the high-voltage bus, the circuit breakers, and the transformers. The switchyard breakers are selected with appropriate interruption rating compatible with the fault current available from the transmission system. Power is distributed to the Main and Borehole Array Area by underground cables.

Emergency Power

Emergency power is provided by diesel generators located in the facility utility area. Emergency power will be provided for the safety class loads.

2.1.3.8 Security Center

The Security Center serves as the security administrative headquarters and contains a pistol firing range, armory, lockers, change rooms, training and meeting rooms, offices, and a storage room for supplies.

2.1.3.9 Environmental, Safety, and Health

Environmental, Safety, and Health is a fully equipped laboratory that is provided to perform analyses for utilities monitoring and control, environmental emissions and effluents monitoring, waste characterization, and health physics and industrial hygiene monitoring. Tests performed include radiochemistry (alpha, beta, and gamma radiation) and chemical analyses as needed. External dosimetry laboratories, radiation instrument laboratories, and a source calibration area are included. The building also includes offices and office support areas and common-use spaces such as lunch/break room and change/restrooms.

2.1.3.10 Medical Center

The Medical Center provides limited medical and wellness care services, and is particularly needed because of the likelihood of the Deep Borehole Disposal Facility being located in a remote area. Seriously injured or contaminated employees are externally decontaminated and are evacuated to a local emergency facility. This facility provides space for various medical services, such as first aid, dispensary, physical examinations, x ray and EKG, and laboratory space for various testing services and physical/industrial therapy. Office space for medical staff and records is included. Additional toilet facilities are provided for the employee drug testing program.

2.1.3.11 Fire Station

The Fire Station is provided to house the fire department fire engines, ambulances, and other emergency vehicles and emergency personnel.

2.1.3.12 Emplacing Shift Office Trailers

Offices and other facilities will be available for management and employees at the emplacing location.

2.1.3.13 Emplacing Waste Management Facility

Wastes produced during the emplacement process will be processed at the emplacement facility waste management building or transported to the main waste management building.

2.1.3.14 Radiation Decontamination and Monitoring

Separate Radiation Monitoring systems will be provided in the Emplacing–Borehole Sealing Facility and Main Facility Areas.

2.1.3.15 Drilling Shift Office Trailers

Office and rest areas will be provided at the Drilling and Emplacing–Borehole Sealing Facilities for employee convenience.

2.2 Design Safety

2.2.1 Earthquake

All plant structures, systems, and components (SSCs) will be designed for earthquake generated ground accelerations in accordance with *Design and Evaluation Guidelines for DOE Facilities Subjected to Natural Phenomena Hazards,* UCRL-15910 (DOE-STD-1020-92).

Under this guidance, the applicable seismic hazard exceedance probability of 2×10^{-3} for General Use (Performance Category 1), 1×10^{-3} for Low and Moderate Hazard (Performance Category 2 & 3), and 2×10^{-4} for High Hazard (Performance Category 4) SSCs will be used.

Seismic design considerations for Performance Category 3 and 4 SSCs will include provisions for such SSCs to function as hazardous materials confinement barriers, and also for adequate anchorage of building contents to prevent their loss of critical function during an earthquake. In essence, design considerations avoid premature unexpected loss of function and attempt to maintain ductile behavior in structures during earthquakes.

Characteristics of the lateral force design are as important as the magnitude of the earthquake load used for design. These characteristics include redundancy, ductility, the combining of elements to behave as a single unit, adequate equipment anchorage, allowance for the impact of nonuniformity and asymmetry in structures and equipment, detailing of connections and reinforced concrete elements, and the use of specified materials in their construction.

In addition to structural safety, proper operation of emergency systems during and after an earthquake is essential. The fire protection system, emergency power, water supplies, and the controls for the safety class equipment are examples of plant systems that must be available following an earthquake. As stated in Chapter 4 of

UCRL-15910 (DOE-STD-1020-92) under Survival of Emergency Systems, "earthquake-resistant design considerations extend beyond the dynamic response of structures and equipment to include survival of systems that prevent facility damage or destruction due to fires or explosions."

2.2.2 Wind

All new plant structures, systems, and components (SSCs) will be designed for wind or tornado load criteria in accordance with UCRL-15910 and the corresponding facility usage and performance goals. Wind loads will be based on the annual probability of exceedance of 2×10^{-2} for General and Low Hazard (Performance Category 1 & 2), 1×10^{-3} for the Moderate Hazard (Performance Category 3), and 1×10^{-4} for the High Hazard (Performance Category 4) SSCs. The sites for which tornadoes are the viable wind hazards will be designed for the annual probability of exceedance of 2×10^{-5} as defined in Table 5-3 of *Design and Evaluation Guidelines for DOE Facilities Subjected to Natural Phenomena Hazards*, UCRL-15910 (DOE-STD-1020-92).

Wind design criteria will be based on annual probability of exceedance, importance factor, missile criteria, and atmospheric pressure change as applicable to each performance (usage) category as specified in Table 5-2 of UCRL-15910.

As stated in UCRL-15910, characteristic safety considerations will be reflected in the design of the system in that, "the main wind-force resisting system must be able to resist the wind loads without collapse or excessive deformation. The system must have sufficient ductility to permit relatively large deformations without sudden or catastrophic collapse. Ductility implies an ability of the system to redistribute loads to other components of the system when some part is overloaded."

2.2.3 Floods

All facilities and buildings should preferably be located above the critical flood elevation (CFE) from the potential flood source (river, dam, levee, precipitation, etc.) or the site/facility will be hardened to mitigate the effects of the flood source such that performance goals are satisfied. Emergency operation plans will be developed to safely evacuate employees and secure areas with hazardous, mission-dependent, or valuable materials. The extent of the flood hazard will be determined using the appropriate usage (performance) category for determining the "Annual Hazard Probability of Exceedance," which is 2×10^{-3} for General Use (Performance Category (1), 5×10^{-4} for Important or Low Hazard (Performance Category 2), 1×10^{-4} for Moderate Hazard (Performance Category 3), and 1×10^{-5} for High Hazard (Performance Category 4) fa ity as defined in Chapter 6 of UCRL-15910. For mo ate- and high-hazard facilities located below the de basis flood (DBFL) elevation, the design must be de oped so that continued facility operation is provided

The CFE will be determined by obtaining the ap priate DBFL. The DBFL is the peak hazard level (f rate, depth of water, etc.) corresponding to the mean nual Hazard Probability of Exceedance" or combina of flood hazards (river flooding, wind–wave action, and corresponding loads associated with peak hazard and applicable load combinations (hydrostatic and/or drodynamic forces, debris loads, etc.).

Site drainage must comply with the regulations governing local agency. The minimum design leve the Storm Water Management System is the 25-yr, storm, but potential effects of larger storms up to the yr, 6-hr storm will also be considered. However, S Water Management Systems must prevent the CFE being exceeded. Accordingly, for some facilities, S Water Management Systems may have to be designe more extreme storms.

Whenever possible, all facilities in performan egories above the General Use Category (Performance egory (1) will be constructed with the lowest floor structure, including subsurface floors, above the lev the 500-yr flood. This requirement can be met by and/or flood protection. Whenever possible, all fac including their basements in all performance catego will be sited above the 100-yr flood plain (DOE 6450 Section 0111-2.5).

2.2.4 Fire Protection

The fire protection systems of the plant and its ciated support buildings will be in accordance with orders and National Fire Protection Association Code Standards.

Redundant firewater supplies and pumping ca ties (electric motor drivers with diesel backup) will b stalled to supply the automatic and manual fire prot systems located throughout the site. One supply tank one set of pumps will be designated to meet Design Earthquake requirements. Appropriate types of fi tection systems will be installed to provide life safety vent large-loss fires, prevent production delay, ensu fire does not cause an unacceptable on-site or off-s lease of hazardous material that will threaten the health and safety or the environment and to minimi potential for the occurrence of a fire and related pe

Specific production areas and/or equipment will be provided with the appropriate fire detection and suppression features as required with respect to the unique hazard characteristics of the product or process. A fire hazards analysis will be performed to assess the risk from fire within individual fire areas of the facility.

All sprinkler water that has been discharged in the Surface Processing Facility and the Emplacing–Borehole Sealing Facility will be contained, monitored, sampled, and (if required) retained until it can be disposed of safely.

2.2.5 Safety Class Instrumentation and Control

The safety classification of instrumentation and controls will be derived from the safety functions performed. This safety classification is based on DOE 6430.1A and DOE 5481.1B.

Safety class instrumentation will be designed to monitor identified safety related variables in safety class systems and equipment over expected ranges for normal operation, accident conditions, and safe shutdown. Safety class controls will be provided, when required, to control these variables.

Suitable redundancy and diversity will be used when designing safety class instrumentation to ensure that safety functions can be completed, when required, and that a single-point failure will not cause loss of protective functions. Redundant safety class signals must also be physically protected or separated to prevent a common event from causing a complete failure of the redundant signals. IEEE 379 and IEEE 384 provide the design bases for redundancy and separation criteria. Safety class instrumentation will be designed to fail in a safe mode following a component or channel failure. Safety class UPS power will be provided when appropriate.

2.2.6 Nuclear Criticality

2.2.6.1 Criticality Safety of Surface Operations

The design of the Deep Borehole Facility will include the basic controls for assuring nuclear criticality safety in the Surface Processing Facility and the Emplacing–Borehole Sealing Facility, during on-site transportation of plutonium feed materials between the site perimeter and the Surface Processing Facility, and during transportation of processed disposal form from the Surface Processing Facility to the Emplacing–Borehole Sealing Facility. The process designs will satisfy the double contingency principle, that is, "process designs shall incorporate sufficient safety factors so that at least two unlikely, independent, and concurrent changes in process conditions must occur before a criticality accident is possible" from DOE 6430.1A. Basic control methods for the prevention of nuclear criticality include the following:

1. Provision of safe geometry (preferred).
2. Engineered density and/or mass limitation.
3. Provision of fixed neutron absorbers.
4. Provision of soluble neutron absorbers.
5. Use of administrative controls.

Although geometric controls are used extensively wherever practical, there are cases where geometric control alone cannot practically provide assurance of criticality safety. In these cases, engineered controls can be used to control neutron moderation, neutron absorbing poisons, as well as the mass, concentration/density of the materials.

2.2.6.2 Criticality Regulations for Surface Processing

Technical criteria for criticality safety in Surface Processing Facility Operations will be mission-specific but may be based on HLW requirements given in 10 CFR 60.131 (b)(7): "All systems for processing, transporting, handling, storage, retrieval, emplacement, and isolation of radioactive waste shall be designed to ensure that a nuclear criticality accident is not possible unless two unlikely, independent, and concurrent or sequential changes have occurred in the conditions essential to nuclear criticality safety. Each system shall be designed for criticality safety under normal and accident conditions. The calculated effective multiplication factor (K_{eff}) must be sufficiently below unity to show at least a 5% margin, after allowance for the bias in the method of calculation and the uncertainty in the experiments used to validate the method of calculation." That is, the criticality safety requirement specified in this document is that the effective criticality coefficient be maintained at a value less than 0.95.

2.2.6.3 Post-Emplacement Downhole Criticality Safety

In the context of the present deep borehole disposal facility design, downhole criticality safety events that are of concern can be classified into three broad categories as follows:

Category 1. Criticality in Undisrupted Emplacement Configuration

Category 1.1. Criticality in undisturbed initial emplacement configuration

Category 1.2. Criticality in emplacement configuration disturbed only by material property alterations

Category 2. Criticality in Disrupted Emplacement Configurations

Category 2.1. Criticality in emplacement accident configurations

Category 2.2. Criticality in disrupted configurations due to natural phenomena

Category 3. Criticality due to Geochemical Reconcentration

Category 3.1. Criticality due to geochemical reconcentration in borehole

Category 3.2. Criticality due to geochemical reconcentration in geosphere

In this uncanistered design concept, downhole criticality is controlled and prevented by adjusting the plutonium loading and the concentrations of neutron absorbing additives in the disposal form for criticality safety under the design assumption that the pellets are close-packed at the maximum volume fraction that can be achieved. The criticality analyses used for designing the emplacement configuration must account for not only the presence of the fissile material, but also the moderation, reflection, and absorption nuclear properties of the different materials, and the properties of some portion of the host rock itself. In particular, it is necessary to consider the moderating effects of hydrogen in the bound water in the grouts and the brine invading the interstitial pore space of all materials within the borehole.

In addition to the above analyses, which are required to establish criticality safety at the time of initial emplacement, additional short-term, intermediate-term, and long-term scenarios will have to be considered to evaluate criticality safety under normal operating and natural event–induced accident conditions. Long-term criticality evaluations are necessary because both ^{239}Pu and its alpha-decay product ^{235}U are fissile and very long lived (half-lives 24,400 yr and 7.1×10^8 yr, respectively). In particular, short-term scenarios in which the emplacement configuration remains unaltered, but the flow barriers to brine influx from the surrounding geosphe[illegible] be considered. Furthermore, it is n[illegible] scenarios in which the geometric confi[illegible] ment is completely disrupted, the pl[illegible] posal form is redistributed either by ph[illegible] or by leaching out by brine, and brine[illegible] dissolved at another location in the b[illegible] displaces plutonium without brine fro[illegible]

However, the long-term risk of cr[illegible] tonium accumulation, either within the[illegible] an undetected closely spaced set of f[illegible] rounding host rock, must be evaluated[illegible] may occur due to *slow but continuous* [illegible] nium from the disposal form by recirc[illegible] port into other regions, and reconcentra[illegible] through continuous precipitation or so[illegible] ent conditions of temperature and bri[illegible] existence of sufficiently large brine flo[illegible] nating from thermohaline convective i[illegible] in fractures or other mechanisms, woul[illegible] such reconcentration scenarios to be of [illegible] preliminary estimates show that even [illegible] gradients have a strongly stabilizing effe[illegible] initiation of brine circulation.

Analyses of Category 1 Criticali[illegible]

The preliminary criticality analyse[illegible] performed show that the immobilized ceramic pell[illegible] grout emplacement design presented in this report i[illegible] robust and safe under Category 1 criticality event scen[illegible]

Computational Procedure

The criticality calculations were performed using V[illegible] sion 4a of the *Monte Carlo Neutron and Photon Tr[illegible] port (MCNP)* code developed by the Los Alamos Nati[illegible] Laboratory (LANL). The high-density, pointwise co[illegible] ous-energy cross sections from the LANL ENDEF-V[illegible] tron cross section library were used for the nu[illegible] properties of the materials. This cross section libr[illegible] the most recent and appropriate for calculating the c[illegible] cality coefficient K_{eff} for "slow" near-critical confi[illegible] tions. The calculations were performed for a unifo[illegible] emplaced 1 m section of a 0.91-m-diam (36-in.) bore[illegible] assuming that the borehole extends to infinity in bo[illegible] rections parallel to its axis. Perfect reflection bou[illegible] conditions were used at the top and bottom boundari[illegible] mimic the infinitely long borehole. Neutron transport [illegible] the granite host rock was modeled to a depth of 1 m i[illegible] radial direction with a perfectly absorbing boundary c[illegible] dition imposed at the outer surface. Although neu[illegible] arriving at this boundary leave the computational do[illegible]

and do not return to it, the calculations show that the neutron flux moving past this boundary is reduced to negligible levels because of moderation and thermalization of the neutrons by the 1 m of granite.

The elemental compositions of the ceramic, granite, grout, and brine used in the criticality calculations are given in Table 2.2.6.3-1. Natural abundance isotopic ratios are used for each element except the fissile materials. The emplaced plutonium was assumed to be ^{239}Pu without admixtures of ^{238}Pu and ^{240}Pu, although an isotopic composition of 93% ^{239}Pu, 6% ^{240}Pu, and 1% trace isotopes was assumed for the ceramic pellet feed to the Deep Borehole Disposal Facility. The presence of the ^{240}Pu at this level could somewhat alter the results. Also, the criticality analyses presented here do not consider the effects of production of fissile daughters of ^{239}Pu, and in particular do not include the ^{235}U produced by alpha decay.

Brine salinities as high as 500 grams of total dissolved solids per liter, and averaging 300 g/L, have been reported at depths of 3-4 km in crystalline rock formations with undisturbed connate water. Because the chlorine in the brine absorbs neutrons significantly, the salinity of the brine was assumed to be a conservative 50 g/L. This assumption was made to avoid taking excessive credit for neutron absorption by chlorine, which has a large neutron capture cross section, and other constituents because the continued existence of high salinity levels should not be depended on to ensure criticality safety. The composition of the brine used here was obtained from measurements made at a depth of 1,200 m in the deep borehole drilled at the Kola Peninsula in Russia.

The ceramic pellets are ceramic-coated 2.54-cm-diam (1-in.) spheres. The maximum packing volume fraction for spherical pellets is 64%. The 60% volume fraction assumed here is lower than the maximum packing volume fraction by 4% to allow for packing inefficiencies during emplacement. To reduce the cost of immobilization of plutonium in ceramic pellets, only half of the 60% volume fraction of ceramic pellets is Pu loaded, while the remainder is inexpensive uncoated commercial-grade ceramic of the same composition. Therefore, the effective Pu-loading mass fraction of the total 60% ceramic volume fraction is equal to half that of the Pu-loaded ceramic pellets. The modeling methodology assumes uniform mixture of the Pu-loaded and non-Pu-loaded pellets within a continuum approximation scale much larger than the individual pellets and does not account for pellet-to-pellet variations.

The ceramic coating material is assumed to have the same composition as the ceramic in the interior of the pellet. The ceramic is assumed to be a titanate-based Synroc ceramic with 95% zirconolite ($CaZrTi_2O_7$), 2.5% Al_2O_3,

Table 2.2.6.3-1. Chemical Compositions of Materials Used in Criticality Analyses.

Chemical Element(1)	Ceramic	Granite	Grout	Bentonite	Brine
Density g/cm^3	4.00	2.80	2.08	1.70	1.05
Porosity %	0.0	0.0	20.0	37.0	
Si		0.32805	0.28471	0.32000	
O	0.33180	0.48604	0.53732	0.49000	0.84590
Ti	0.28225	0.00234			
Al	0.00413	0.07658	0.04338		
Fe		0.02482	0.01085		
Mn		0.00093			
Mg		0.00531		0.02000	
Ca	0.11655	0.01422	0.07616	0.00200	0.01124
Na		0.02582	0.01598	0.03000	0.00603
K		0.03412	0.01717	0.00400	
H		0.00094	0.01618		0.10658
P		0.00083		0.00100	
Cl			0.00305		0.03025
Zr	0.26527				

(1) Weight fraction of component chemical elements.

Category 1. Criticality in Undisrupted Emplacement Configuration

Category 1.1. Criticality in undisturbed initial emplacement configuration

Category 1.2. Criticality in emplacement configuration disturbed only by material property alterations

Category 2. Criticality in Disrupted Emplacement Configurations

Category 2.1. Criticality in emplacement accident configurations

Category 2.2. Criticality in disrupted configurations due to natural phenomena

Category 3. Criticality due to Geochemical Reconcentration

Category 3.1. Criticality due to geochemical reconcentration in borehole

Category 3.2. Criticality due to geochemical reconcentration in geosphere

In this uncanistered design concept, downhole criticality is controlled and prevented by adjusting the plutonium loading and the concentrations of neutron absorbing additives in the disposal form for criticality safety under the design assumption that the pellets are close-packed at the maximum volume fraction that can be achieved. The criticality analyses used for designing the emplacement configuration must account for not only the presence of the fissile material, but also the moderation, reflection, and absorption nuclear properties of the different materials, and the properties of some portion of the host rock itself. In particular, it is necessary to consider the moderating effects of hydrogen in the bound water in the grouts and the brine invading the interstitial pore space of all materials within the borehole.

In addition to the above analyses, which are required to establish criticality safety at the time of initial emplacement, additional short-term, intermediate-term, and long-term scenarios will have to be considered to evaluate criticality safety under normal operating and natural event–induced accident conditions. Long-term criticality evaluations are necessary because both ^{239}Pu and its alpha-decay product ^{235}U are fissile and very long lived (half-lives 24,400 yr and 7.1×10^8 yr, respectively). In particular, short-term scenarios in which the emplacement configuration remains unaltered, but the flow barriers to brine influx from the surrounding geosphere have failed, must be considered. Furthermore, it is necessary to consider scenarios in which the geometric configuration at emplacement is completely disrupted, the plutonium in the disposal form is redistributed either by physical rearrangement or by leaching out by brine, and brine bearing plutonium dissolved at another location in the borehole invades and displaces plutonium without brine from the pore space.

However, the long-term risk of criticality due to plutonium accumulation, either within the borehole or within an undetected closely spaced set of fractures in the surrounding host rock, must be evaluated. Such a criticality may occur due to *slow but continuous* leaching of plutonium from the disposal form by recirculating brine, transport into other regions, and reconcentration at one location through continuous precipitation or sorption under different conditions of temperature and brine chemistry. The existence of sufficiently large brine flow velocities, originating from thermohaline convective instability of brine in fractures or other mechanisms, would be necessary for such reconcentration scenarios to be of concern. However, preliminary estimates show that even moderate salinity gradients have a strongly stabilizing effect and prevent the initiation of brine circulation.

Analyses of Category 1 Criticality Events

The preliminary criticality analyses that have been performed show that the immobilized ceramic pellets-in-grout emplacement design presented in this report is very robust and safe under Category 1 criticality event scenarios.

Computational Procedure

The criticality calculations were performed using Version 4a of the *Monte Carlo Neutron and Photon Transport (MCNP)* code developed by the Los Alamos National Laboratory (LANL). The high-density, pointwise continuous-energy cross sections from the LANL ENDEF-V neutron cross section library were used for the nuclear properties of the materials. This cross section library is the most recent and appropriate for calculating the criticality coefficient K_{eff} for "slow" near-critical configurations. The calculations were performed for a uniformly emplaced 1 m section of a 0.91-m-diam (36-in.) borehole, assuming that the borehole extends to infinity in both directions parallel to its axis. Perfect reflection boundary conditions were used at the top and bottom boundaries to mimic the infinitely long borehole. Neutron transport into the granite host rock was modeled to a depth of 1 m in the radial direction with a perfectly absorbing boundary condition imposed at the outer surface. Although neutrons arriving at this boundary leave the computational domain

and do not return to it, the calculations show that the neutron flux moving past this boundary is reduced to negligible levels because of moderation and thermalization of the neutrons by the 1 m of granite.

The elemental compositions of the ceramic, granite, grout, and brine used in the criticality calculations are given in Table 2.2.6.3-1. Natural abundance isotopic ratios are used for each element except the fissile materials. The emplaced plutonium was assumed to be ^{239}Pu without admixtures of ^{238}Pu and ^{240}Pu, although an isotopic composition of 93% ^{239}Pu, 6% ^{240}Pu, and 1% trace isotopes was assumed for the ceramic pellet feed to the Deep Borehole Disposal Facility. The presence of the ^{240}Pu at this level could somewhat alter the results. Also, the criticality analyses presented here do not consider the effects of production of fissile daughters of ^{239}Pu, and in particular do not include the ^{235}U produced by alpha decay.

Brine salinities as high as 500 grams of total dissolved solids per liter, and averaging 300 g/L, have been reported at depths of 3-4 km in crystalline rock formations with undisturbed connate water. Because the chlorine in the brine absorbs neutrons significantly, the salinity of the brine was assumed to be a conservative 50 g/L. This assumption was made to avoid taking excessive credit for neutron absorption by chlorine, which has a large neutron capture cross section, and other constituents because the continued existence of high salinity levels should not be depended on to ensure criticality safety. The composition of the brine used here was obtained from measurements made at a depth of 1,200 m in the deep borehole drilled at the Kola Peninsula in Russia.

The ceramic pellets are ceramic-coated 2.54-cm-diam (1-in.) spheres. The maximum packing volume fraction for spherical pellets is 64%. The 60% volume fraction assumed here is lower than the maximum packing volume fraction by 4% to allow for packing inefficiencies during emplacement. To reduce the cost of immobilization of plutonium in ceramic pellets, only half of the 60% volume fraction of ceramic pellets is Pu loaded, while the remainder is inexpensive uncoated commercial-grade ceramic of the same composition. Therefore, the effective Pu-loading mass fraction of the total 60% ceramic volume fraction is equal to half that of the Pu-loaded ceramic pellets. The modeling methodology assumes uniform mixture of the Pu-loaded and non-Pu-loaded pellets within a continuum approximation scale much larger than the individual pellets and does not account for pellet-to-pellet variations.

The ceramic coating material is assumed to have the same composition as the ceramic in the interior of the pellet. The ceramic is assumed to be a titanate-based Synroc ceramic with 95% zirconolite ($CaZrTi_2O_7$), 2.5% Al_2O_3,

Table 2.2.6.3-1. Chemical Compositions of Materials Used in Criticality Analyses.

Chemical Element(1)	Ceramic	Granite	Grout	Bentonite	Brine
Density g/cm^3	4.00	2.80	2.08	1.70	1.05
Porosity %	0.0	0.0	20.0	37.0	
Si		0.32805	0.28471	0.32000	
O	0.33180	0.48604	0.53732	0.49000	0.84590
Ti	0.28225	0.00234			
Al	0.00413	0.07658	0.04338		
Fe		0.02482	0.01085		
Mn		0.00093			
Mg		0.00531		0.02000	
Ca	0.11655	0.01422	0.07616	0.00200	0.01124
Na		0.02582	0.01598	0.03000	0.00603
K		0.03412	0.01717	0.00400	
H		0.00094	0.01618		0.10658
P		0.00083		0.00100	
Cl			0.00305		0.03025
Zr	0.26527				

(1) Weight fraction of component chemical elements.

and 2.5% TiO_2 by mass and to be 4.0 g/cm^3 in density. Because of the relatively large neutron capture cross section of Ti and the large mass fraction of Ti in the ceramic, the ceramic pellet material itself serves as an effective neutron poison. The grout in the ceramic pellet–grout mix is assumed to consist 80% by volume of NBS ordinary cement and 20% by volume of brine of the same composition as that in the host rock (given above). The composition of the NBS Ordinary Cement was obtained from *Criticality Calculation with MCNP, A Primer.* The grout composition given in Table 2.2.6.3-1 includes the 20% by volume of brine.

Category 1.1 Criticality Analyses

Criticality events belonging to Category 1.1 relate to conditions at initial emplacement without any alteration of the emplaced materials. Criticality calculations were performed for this case for an emplaced ceramic pellet–grout mix consisting of 30% by volume Pu-loaded ceramic pellets, 30% by volume non-Pu-loaded ceramic p and 40% by volume grout. The Pu loading of the Pu-l ceramic pellets was varied over the range of 0.5, 1.0 2.0, 10.0, and 20.0% by mass corresponding to Pu ings of 0.25, 0.5, 0.75, 1.0, 5.0, and 10.0% by mass f combined mass of Pu-loaded and in non-Pu-loaded ce pellets. For each of these Pu loadings, gadolinium ne absorber concentrations of 0.0, 0.1, and 1.0 gadoli moles per plutonium mole were considered. The cri ity coefficient for pellet–grout–brine and pellet- mixes are shown in Figures 2.2.6.3-1 and 2.2.6.3-2 spectively, for these three cases of Pu loading. The Pu ing per unit length along the borehole is also show provide a basis for comparing the Pu loading betw Immobilized and Direct Disposal deep borehole alte tive designs. These results show that:

1. The average Pu loading of 0.5% average Pu loa by mass in present design is heavily subcritical (K_e 0.69) even without addition of any gadolinium

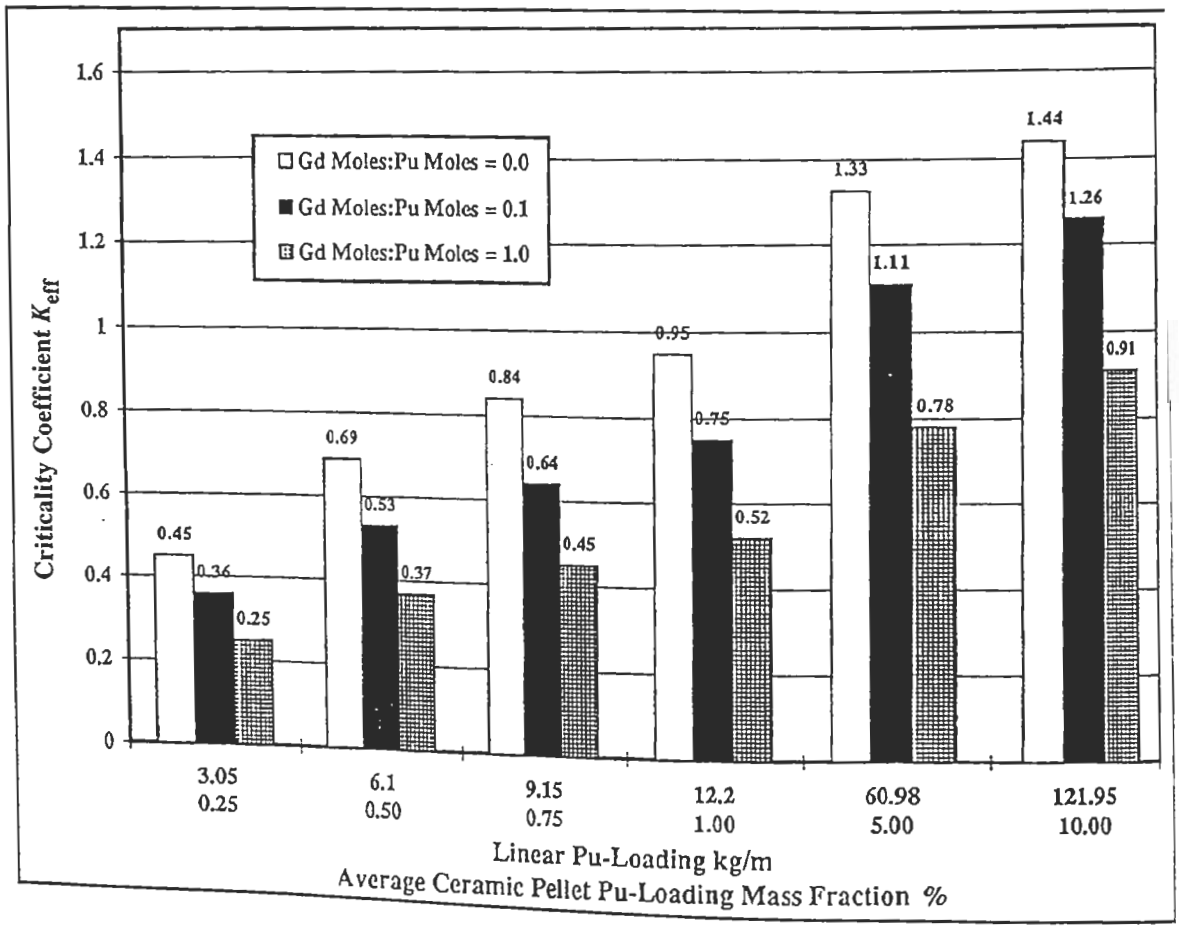

Figure 2.2.6.3-1. Criticality Analysis for Ceramic Pellet–Grout–Brine Mixture in the Borehole.

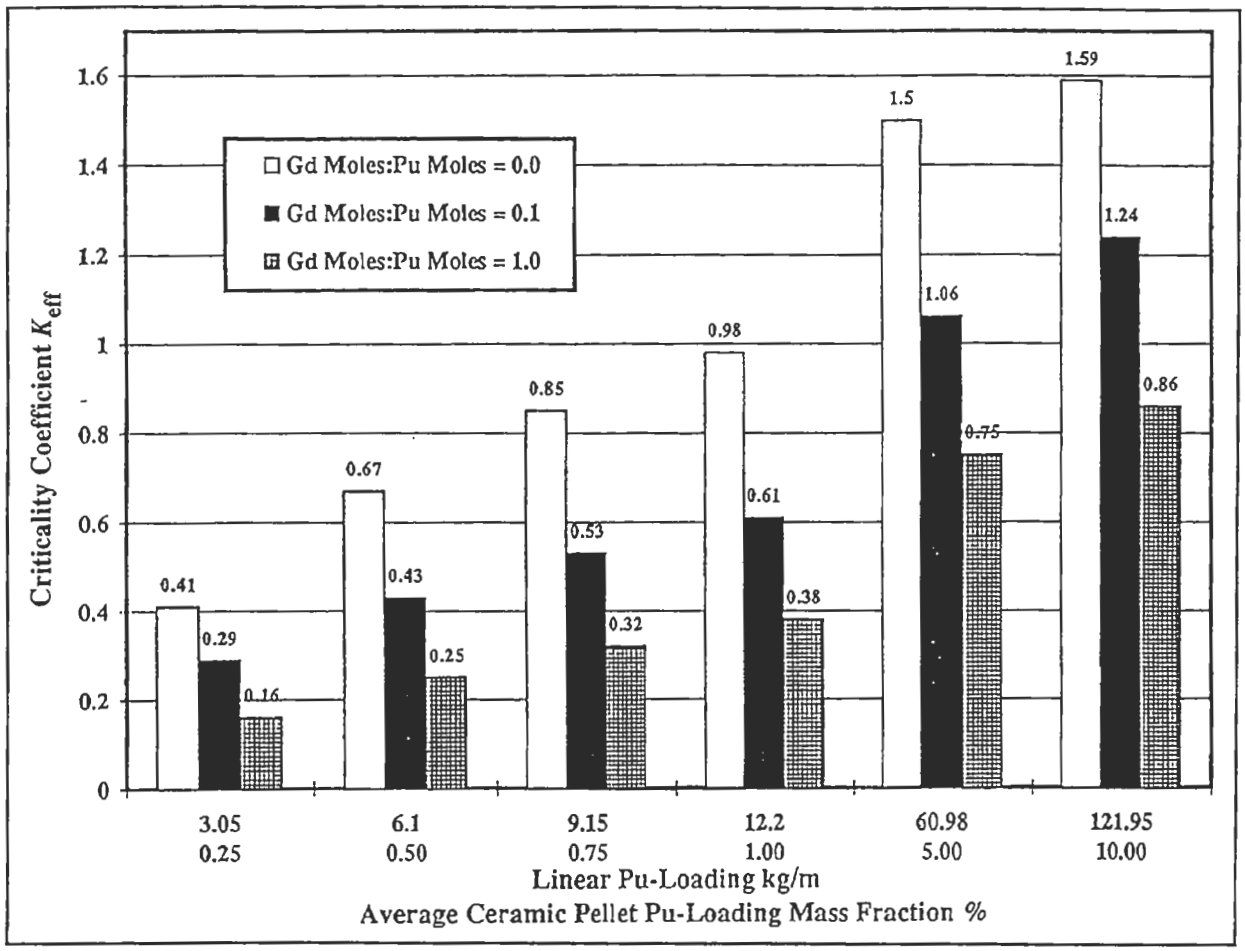

Figure 2.2.6.3-2. Criticality Analysis for Ceramic Pellet–Brine Mixture in the Borehole.

neutron poison. The addition of 0.1 and 1.0 moles Gd to a mole Pu increases the safety margin by further lowering K_{eff} to 0.53 and 0.37, respectively. Thus the design does not have to rely on the presence of gadolinium for criticality safety.

2. Average ceramic pellet Pu loadings in excess of 1% are too near criticality to provide an adequate margin of safety without reliance on the neutron poison gadolinium.

3. Average ceramic pellet Pu loading at 5% is supercritical at 0.1 mole of gadolinium to 1 mole of Pu; at 10% average ceramic pellet Pu loading, even 1 mole of gadolinium to 1 mole of Pu does not provide a substantial margin of safety.

Detailed analysis of the computational results show that the titanium in the ceramic pellet matrix significantly contributes to neutron absorption and criticality safety. Because the ceramic itself is very insoluble in brine, this protection is very long lasting.

Category 1.2 Criticality Analyses

Criticality events in Category 1.2 include primarily those in which the nuclear properties of the brine, the grout or the ceramic disposal form are sufficiently altered to induce criticality. For example, brine containing dissolved plutonium, may invade the pore spaces in the borehole thus increasing the effective plutonium loading. Also, dissolution and removal of the grout sealant by brine can leave the ceramic pellets surrounded by more brine thus increasing the neutron moderation by the hydrogen in water. On the other hand, chlorine and other dissolved constituents in the brine may also counteract the undesirable impact of hydrogen by absorbing neutrons. If the ceramic pellets also lose structural strength and compact into the voids created by the dissolution and removal of grout, a local increase in plutonium loading can occur.

The criticality coefficient for a mixture of 30% by volume Pu-loaded ceramic pellets, 30% by volume non-Pu-loaded ceramic pellets, and 40% by volume brine is given in Figure 2.2.6.3-2 for the same values of average Pu loading of ceramic pellets as in Figure 2.2.6.3-1. This case represents a bounding case when all of the grout has dissolved away and is replaced by brine. These results show that:

1. At the average ceramic pellet Pu loading of 0.5% of the present design, the criticality coefficient without gadolinium ($K_{eff} = 0.67$) is even smaller than that in the case with grout present. This, perhaps, surprising result is obtained because at this Pu loading the increased moderation of neutrons due to the greater amount of hydrogen in the water is more than offset by neutron absorption by the chlorine and other constituents in the brine. However, at average ceramic pellet Pu loadings of 5 and 10%, the criticality coefficient is greater than when grout was present with the crossover occurring somewhere between 0.75 and 1% Pu loading. In summary, even without gadolinium, at 0.5% Pu loading the present design is heavily subcritical in this bounding case.

2. Furthermore, it is seen that the criticality coefficient when gadolinium is present is much smaller in this case than when the grout was present at both gadolinium concentrations and at all average Pu loadings. This is because the additional hydrogen in the brine reduces the speed of the neutrons to the thermal range where the gadolinium is more effective in absorbing neutrons. In summary, in the present design gadolinium automatically counteracts the increased moderating effect of additional brine in the pore spaces.

3. Estimates of the increase in average Pu loading due to plutonium in solution at the solubility limit in the brine show that, even when the increased temperature, pH, and other geochemical conditions are taken into account, the increase in Pu loading is too small by orders of magnitude to have a significant impact on average Pu loading on the criticality coefficient. Thus, as long as plutonium is not continuously precipitated or sorbed from solution to increase the Pu loading in the solid phase, plutonium in the brine will not directly induce a criticality event.

4. The criticality coefficient for the bounding case of a local increase in plutonium concentration to 1% Pu loading due to nonuniform mixing of the Pu-loaded and non-Pu-loaded pellets corresponds to the 1% average Pu-loading case in Figures 2.2.6.3-1 and 2.2.6.3-2. It is seen that, in this case also, the design is subcritical.

Analyses of Category 2 Criticality Events

The preliminary criticality analyses that have performed show that the immobilized ceramic pellet grout emplacement design presented in this report is robust and safe under Category 2 criticality events.

Category 2.1 Criticality Analyses

Criticality events belonging to Category 2.1 are disrupted configurations arising from accident conditions during emplacement of the ceramic pellets. In these cases, the cases in which the ceramic pellets are unruptured and when they rupture must be considered separately.

1. In accidents in which the ceramic pellets do not rupture, they will fall into the borehole and collect at a maximum packing fraction of about 64% by volume. This however, is essentially the same as the emplacement configuration at which the design is critically safe both in grout and in brine. Thus, even if the grout separates from the ceramic pellets during the fall, the system will remain subcritical and safe as shown in Figure 2.2.6.3-2.

2. A bounding case for an accident in which the ceramic pellets break is one in which the pellets become powder that collects with or without interstitial pores occupied by water or brine. The maximum Pu loading that can be reached in this case is 0.3% by mass with 100% ceramic volume fraction if the Pu-loaded and non-Pu-loaded ceramic powders do not segregate and 0.6% by mass with 100% ceramic volume fraction if the Pu-loaded powder segregates. Criticality calculations for monolithic ceramic logs show these cases also to be heavily subcritical.

Thus, the intrinsic character of the ceramic pellet concept combined with the low Pu loading utilized makes the design criticality safe under emplacement accident conditions also.

Category 2.2 Criticality Analyses

Criticality events belonging to Category 2.1 include disrupted emplacement configurations arising from natural phenomena such as earthquakes. One criticality analysis was considered for disruption of the emplacement configuration due to an earthquake. In this case, it was assumed that a very wide fracture, that intersects the borehole normal to its axis, would be created by an earthquake. It was assumed that the emplaced ceramic pellet-grout would slump into the fracture and would extend

cylindrical disk 10 m in diameter. The ceramic pellets were assumed to remain close-packed at 60% volume fraction and the grout to be brine saturated. The boundary conditions were those described previously for the 0.91-m-diam (36-in.) borehole. This computation was a part of an attempt to determine whether there was a critical Pu loading below which a volume of ceramic pellet–grout mix of unlimited size would become critical. The criticality coefficient that was computed was equal to 0.88, indicating a high margin of criticality safety. This computation also can be used to assess the safety of an accident at the surface where a large volume of ceramic pellet–grout mix is accidentally released onto the ground and spreads out into a cylindrical pile.

Analysis of Category 3 Criticality Events

Category 3 criticality events are criticality events induced by slow geochemical reconcentration of plutonium due to the *slow but continuous* dissolution of the emplaced plutonium disposal form by flowing subsurface brines, mobilization and transport of the plutonium as a solute to another location in the borehole or the host rock mass, and reconcentration at this location due to precipitation out of solution and/or absorption from solution on the rock surfaces.

Because of the very small release rates, the process of reconcentration will require the persistence over a long time of continuous or episodic dissolution–reconcentration activity, and the overcoming of many dissolution/reprecipitation are the limiting factors for a critical mass to form. The continuous dissolution and reconcentration process will depend on the presence of an adequate flow velocity of brine, the existence of different temperature, pressure, and geochemical conditions favorable to dissolution at the source location, and reprecipitation at the criticality location as a mineral containing either plutonium or its fissile decay products in dilute concentrations. It will also require the existence of a sufficiently large volume of appropriately configured void space in the host rock, within intergranular pores, fracture sets or vugular cavities, for the mineral to be deposited with fissile material concentration sufficient to form a critical mass.

If a critical mass forms in the subsurface, then depending on the kinetics of the criticality event, a substantial amount of energy may be released in the subsurface. This energy, primarily in the form of heat, would increase the temperature, generate steam, redissolve and expel the fissile material containing minerals from the critical mass along fractures, and deplete the fissile material content as a result of the fissioning process. The expulsion of water in the brine may also increase the solids concentration beyond the solubility limits and cause rapid precipitation of plutonium bearing minerals in the fractures. Also, expulsion of water would reduce its moderating effect on neutrons while the expulsion or precipitation of other chemical constituents of brine (such as chlorine, which is a good neutron absorber) would alter the rate of fissioning. Most, but not all, of these events are likely to lead to shutting down of the nuclear reaction quickly until the critical mass reforms slowly through geochemical reconcentration over geologic time and a criticality event recurs as one of a series of such events.

Thus, Category 3 criticality events are the result of a complex series of coupled phenomena. These events have not been analyzed in the current phase of the program. Although the occurrence of such criticality events is considered to be "beyond extremely unlikely," they will be studied as a part of the research and development program in the future.

2.2.6.4 Regulations for Post-Emplacement Downhole Criticality

Technical criteria for criticality safety for subsurface downhole conditions have not been defined in the existing regulations. To the extent that plutonium is buried in an ancient stable rock formation, it has been speculated that the need for long-term criticality control may be minimal if the consequences of criticality to the biosphere is negligible. However, no systematic studies of downhole criticality at deep borehole conditions have been made to verify these speculative opinions. Therefore, these analyses have to be performed to permit the establishment design criteria for criticality safety in the subsurface during the pre-closure emplacement operations and post-closure performance periods.

2.2.7 Ventilation

The HVAC system design for the Surface Processing and the Emplacing–Borehole Sealing facilities will meet all general design requirements in accordance with DOE 6430.1A, Section 1550, and ASHRAE guides.

The HVAC system provides environmental conditions for the health and comfort of personnel and for equipment protection. Typically, the ventilation system will be designed to maintain confinement to preclude the spread of airborne radioactive particulates or hazardous chemicals within the facilities and to the outside environment.

The design includes engineered safety features to prevent or mitigate the potential consequences of postulated design basis accident events.

2.3 Safeguards and Security System Facilities

The essence of Safeguards and Security (S&S) as it relates to the deep borehole site is to help guarantee that sensitive fissile material is not diverted from the intended disposition process, that the amount of fissile material delivered to the site—within acceptable physical measurement parameters—will be accountably disposed, and that the process satisfies international (IAEA) controls and standards of verifiability. S&S activities involve setting requirements for site construction/layout, site operation, and site closure. In the following sections, we describe bounding conditions for

1. Site construction/layout requirements.
2. Physical site and material protection requirements.
3. International verification needs.

Physical Security, Materials Control and Accountability, IAEA Safeguards, and Physical Security System Facilities are described in Sections 2.3.1 through 2.3.4. These are generally consistent with protecting DOE-defined Category I and II type special nuclear materials. More quantitative, more detailed, and, perhaps, less stringent aspects of S&S needs/requirements will be determined by a site-specific vulnerability threat assessment (VA) and against standards that remain to be defined for the variety of material forms that can be accommodated within the boundary conditions for each borehole disposal variant. In Section 2.3.5 we provide comments about the disposal of Pu immobilized in ceramic pellets and discuss selected issues relating to material protection and proliferation resistance prior to disposal of this form.

2.3.1 Physical Security Requirements

Programmatic activities shall be conducted within security areas designated as (1) Property Protection Areas (PPA), (2) Limited Areas (LA), and (3) Protected Areas (PA). A site plan noting these areas is shown in Figure 3.1.7-1.

Entry portals, manned by protective service personnel, provide access to the site. Metal and explosives detectors, badge readers, and other personnel identification devices shall be utilized at appropriate access points to prevent intrusion of unauthorized personnel or the introduction of prohibited articles. The emergency exits may contain physical barriers with access controls utilizing nuclear material detectors and metal detectors to indicate the removal of sensitive material. However, plutonium alarm thresholds will be set at levels consistent w attractiveness of the material and within other phys rameters that are realistic for each emergency egre tal. In no case should an emergency exit be inhib prevented by a positive alarm condition.

Special provisions shall be made within both the age and special processing areas to protect against nal and external threats. The design/operation of p security systems and procedures is expected to mitig prevent radiological and toxicological sabotage even to provide a credible basis on which material accou ity operations can be carried out.

2.3.1.1 Property Protection Areas (PPA)

The perimeter of the property protected area con of a physical barrier consistent with site specific requ ments (i.e., topography, natural physical barriers, graphic isolation, etc.). The buffer zone preceding the must be provided with sufficient illumination for rea able observation during hours of normal darkness and der reasonable but otherwise adverse weather condi Intrusion detection and assessment should be perfo at the protected area perimeter. Entry of private motor hicles into protected areas should be minimized and ited to authorized parking areas. Access control's w likely be accomplished by a staffed vehicle portal, ho ever, this might be optional because access control m be accomplished at individual buildings within the PA

2.3.1.2 Limited Areas (LA)

Limited Areas (LA) are secured with physical b ers consistent with site specific requirements. Cate III and IV materials can be stored or handled in LAs (DOE Order 5633.3A). Access to these areas and material stored or handled therein should be limited persons whose trustworthiness has been predetermined to persons in their escort. General access to these should be kept to the minimum necessary to accomp the tasks appropriate for such areas. All persons and pa ages entering/leaving LA areas are subject to search seizure at the discretion of the observing protective sec rity officer. These measures inhibit the introduction of ticles of sabotage or the unauthorized removal of nu material. Appropriate portable instrumentation should provided to assist with routine monitoring of persons entering/exiting LA areas. Private motor vehicles sh be prohibited from access to LA areas. The LA are arranged with minimal exit/entry points consistent w efficient and safe operations in this area. Exits fitted w alarms are provided about the PA parameter to allow safe and rapid egress in the event of an emergency.

2.3.1.3 Protected Areas (PA)

Protected Areas (PA) are secured with physical barriers consistent with site specific requirements. Category I and II materials can be stored or handled only in PA areas (DOE Order 5633.3A). Access to these areas and to the material stored or handled therein should be limited to persons whose trustworthiness has been predetermined and to persons in their escort. General access to these areas should be kept to the minimum necessary to accomplish the tasks appropriate for such areas. All persons and packages entering leaving PA areas should be subject to routine search to prevent the introduction of articles of sabotage or the unauthorized removal of nuclear material. Appropriate fixed instrumentation should be provided to assist with routine monitoring of personnel entering/exiting PA areas. Private motor vehicles should be prohibited from access to PA areas. Whenever persons are present in a PA area, those areas should be under constant surveillance. The surveillance can be affected by mutual observation of two or more coworkers (e.g., the "two-man rule"). The PA area is arranged with a single exit/entry point with auxiliary emergency exits fitted with alarms.

2.3.1.4 Storage Areas

Storage areas located in the receiving and processing areas (see Figure 2.1.3.1-1) should be of a "strong room" design and construction and should minimally meet DOE Order 5634.1B. They should be provided with alarms and adequate locks. The issue of keys or key cards should be closely controlled. Access to storage should be strictly limited to assigned persons or to persons under appropriate escort. Where nuclear material is stored overnight in work areas or in sub-storage structures, specially authorized procedures should be used to protect the area. Alarms, patrols, TV surveillance monitors, can be used to help satisfy this requirement. Nearby areas shall provide space, shielding, and access for weighing, gamma fingerprinting (measurement), verification of bar codes for the primary containers, and verification of empty storage locations.

2.3.1.5 Access Control

All persons entering a PA should be issued with special passes or with appropriate registered badges. Badging of persons entering LA or PA areas should follow graded procedures noted below.

Type I: An employee whose duty permits or requires continual access to the area.

Type II: Other employees who are otherwise permitted access to the area.

Type III: Temporary personnel with appropriate business in the area and escorted by employees with Type I or Type II badges as appropriate.

Type IV: Visitors and other guests escorted by employees with Type I or Type II badges as appropriate.

Passes and badges should be designed to obviate counterfeiting.

2.3.1.6 Key Control

Records must be kept of all persons having access to or possession of keys or key cards that access the containment or storage of nuclear material. Arrangements should be made to minimize the possibility of key duplication and the combinations, where appropriate, should be changed at suitable intervals.

2.3.1.7 Communications

Independent duplicate transmission systems for two-way voice communication should be provided for activities involving intrusion detection, assessment, and response. This should include links between guards, their headquarters, and the respective response forces. Independent, duplicate transmission systems, including independent power supplies, should be provided between sensors and alarm display (audible and/or visual) areas.

2.3.1.8 Protective Forces

A 24-hr armed guarding service must be provided to perform routine internal and external patrols. The guards should report at scheduled intervals to local or other security forces during non-working hours. The overall objective of this force is to prevent the unauthorized removal of nuclear materials. Appropriate backup forces should be identified to assist the active on-site force with this task as required.

2.3.1.9 Employee Training

All employees should be annually informed of the importance of effective physical protection measures and be trained in their implementation. Notices on the subject should be conspicuously posted throughout the facility.

2.3.1.10 Material Security Transfer

Every nuclear material handler should be required to conform to procedures transferring custody of the nuclear

material to a succeeding handler. Handlers are additionally expected to be aware of inventories under their direct control and to be able to quickly identify any discrepancies and potential diversions of nuclear material. Movements of nuclear materials within PA and LA areas should be the responsibility of an appropriately identified supervisor or control authority. All prudent and necessary physical protection measures must be applied to such transfers. Nuclear material movement between two protected areas should be treated in full compliance with the requirements for nuclear material in transit after taking account of appropriate site conditions.

2.3.1.11 Emergency Planning

Emergency plans of action should be prepared to counter effectively any possible threat, including attempted unauthorized removal of nuclear material or facility sabotage. Plans should provide training to facility personnel to act appropriately in case of alarm or emergency. Personnel trained at the facility should be prepared to meet all necessary demands of physical protection and recovery of nuclear material and should act in full coordination with appropriately trained response forces and safety response teams. Arrangements must be made to ensure that nuclear material is not removed in an unauthorized manner during emergency evacuation conditions or drills.

2.3.1.12 Annual Surveys

A security survey should be made annually (or whenever a significant change in the function of the facility is recorded) by an appropriately designated physical protection authority to evaluate the effectiveness of the site's physical protection measures and to identify necessary changes in measures that would optimize the Safeguard and Security Plan of the site.

2.3.2 Physical Security System Facilities

2.3.2.1 Site Fencing

The Site Map given in Figure 3.1.7-1 shows security boundaries: the Protected Areas (PAs), Limited Areas (LAs), and the Property Protection Areas (PPA) of the Deep Borehole Disposal Facility. Operations involving the plutonium disposal form in the Surface Processing Facility must be performed in a Material Access Area (MAA) that is hardened for security purposes. The MAA and facilities supporting MAA operations are located in a PA. The Emplacement and Borehole Sealing Facility to which the ceramic pellets are brought is also within a PA. Each PA is secured with a double fence and intruder detection systems. The PA and operations involving classified materials are contained within the LA. The PPA sur the LA and includes the buffer zone around the fa The passenger vehicle parking and personnel servic cafeteria, training center) facilities are located outsi LA but within the PPA.

2.3.2.2 Security Processing—Employees/ Visitors Center

Security Processing—Employees/Visitors Cente serve as the initial point of entry for plant visitors. fi tions performed in this area include badge and pass a rity office, file room, visitor control room, and w orientation rooms. Space is provided for badging an simeter distribution for plant employees. This facility be located in the Personnel Services building in the P zone.

2.3.2.3 Security Center

The Security Center serves as the security admi trative headquarters and contains a pistol firing range mory, lockers, change rooms, training and meeting ro offices, and a storage room for supplies.

2.3.2.4 Personnel and Vehicle Access Cen

Regular access to the PPA of the facility by pedes ans and vehicles will be through the west gate, whe guardhouse and access control facility is located. Visi will be routed to the Security Processing—Employee Visitors Center for clearance, badging, and/or escort. cess to the LA of the facility will be through the west ga at the LA perimeter. Additional manned access con booths are provided for pedestrian and vehicular traffic the PA areas.

Rail and truck access to the facility will be throu the east gate at the combined perimeter of the PPA and LA at that location. A guardhouse and an access con facility are provided at this entrance. As shown in the Si Plan, the entire borehole array area is located within LA, while the Emplacing–Borehole Sealing Facility provided the additional security of a PA fence, a gua house, and an appropriate access control facility for p destrians and vehicular traffic.

2.3.2.5 Security Monitoring and Intrusion Alarm Systems

The Security Center will contain the Access Con and Monitoring Center for safeguarding the main facil area and the borehole array area. This facility will b manned 24 hours a day. The features provided b

physical protection of the site include site fencing, intruder detection devices, site lighting and closed circuit remote viewing systems, communications systems, personal access/egress control systems, guardhouses, and vehicle control stations (rail, truck, and passenger vehicles). The PA and LA area fences of the site will be lighted at night and will be protected by intruder alarm systems and remote surveillance capabilities 24 hours a day.

2.3.2.6 Computer Security

The facility will develop an overall computer security plan so that hardware, software, and database integrity are protected against site-specific threats. This plan will include protection of computer related activities for physical protection as well as for material control and accountability.

2.3.3 Material Control and Accountability

It is expected that the amount of nuclear material transported to the site, minus any amount held captive in waste-stream residues from processing activities, will equal the amount of material deposited in the site's borehole. An integrated site material balance system must be set in place to ensure that this balance is accomplished and available for verification. Measurement systems for the determination of nuclear materials received, diverted through waste streams, or otherwise disposed must be provided as an integral component of the material accounting activity. These systems will be periodically evaluated for precision and accuracy and for the estimation of measurement uncertainty. Material Balance and Accounting combines elements of Waste Monitoring, Material Control and Accountability Measurements, Nuclear Material Control, and Material Accountability as outlined below.

2.3.3.1 Material Accountability

The accountability portion of the Safeguards system provides timely information for the location and amount of all nuclear materials in the facility and is designed to detect abrupt or protracted (multiple) thefts/diversions. The Accountability System provides a means of physically accounting for the disposition of nuclear material and is supported by established measurement control methods and procedures. New technologies and automated techniques will be implemented where practical to reduce requirements for employee access to accountable nuclear materials and to reduce employee exposure to hazardous environments.

The Borehole Disposal Facility will be subdivided into Material Balance Areas (MBAs) for fissile material control and accounting. This covers both the Surface Processing and Emplacing–Borehole Sealing Facilities.

The Receiving, Processing, and Process Waste Management Buildings together form a Material Balance Area (MBA). The plutonium receiving area will satisfy all physical security requirements as described in DOE Order 5632.1C and DOE M5632.1C-1. When the fissile material is classified because of configuration/content, etc., it shall receive the physical protection required by the highest level of classification appropriate for its potential military application.

The amount of nuclear material entering this MBA complex is determined by shipping records and may be validated by direct measurement. Chemical, hazardous, and radioactive waste residues, which are the result of processing activities, are removed from Receiving and Processing Building and may be placed in limited storage for less than 90 days from the time of their generation. During this period, waste containers must be assayed for nuclear material and monitored for surface contamination before they leave the Waste Handling Area. The fissile material will be prevented from leaving the MBA until either satisfactory material balance is ensured or unless other factors can reasonably guarantee that the waste contains no accountable nuclear material.

2.3.3.2 Nuclear Material Control

The material control portion of the Safeguards System governs internal transfer (or movement), location, access, and use of nuclear material; it also monitors the status of process flows and inventories. The Material Control System is closely associated with, and uses data (as needed) from, the Site Process Control, Surface Criticality Safety, ES&H, and Access Control Systems to detect abnormal situations involving nuclear material and/or MC&A system components.

2.3.3.3 MC&A System Integration

This system monitors the storage, processing, and transfer of nuclear materials to detect non-normal events so that no nuclear materials are inadvertently lost, no unauthorized removals occur, and nuclear materials are accounted for and adequately measured. Exact performance of the MC&A system is driven by required loss detection sensitivities that are capable of detecting losses and localizing inventory balances for anomaly resolution. The nuclear MC&A system ties closely with the physical security system of the facility to provide credible assurance that no theft or diversion of nuclear material has occurred.

2.3.4 IAEA Safeguards Requirements

The objective of IAEA safeguards is the timely detection of the diversion of significant quantities of nuclear materials to activities that have military applications. Material accountancy is used together with containment and surveillance as complementary safeguards techniques. A system of accounting for the control of all nuclear materials will be based on a structure of material balance areas (MBA).

2.3.4.1 General Accountability

To satisfy IAEA verification requirements, the site must establish acceptable procedures for identifying, reviewing, and evaluating differences in shipper–receiver measurements, for taking acceptable physical inventories, and for the evaluation of accumulations of unmeasured inventory and unmeasured losses. Additionally, an acceptable system of records showing, for each MBA, receipts for changes involving transfers into and out of such areas. Provisions must also be made to ensure that accounting procedures and other arrangements are being operated correctly. All of these feature should be accommodated by the general Materials Balance and Accounting activities described in Section 2.3.2.

2.3.4.2 Records Systems

Borehole site records shall be retained for at least 5 yr, but facility post-closure security and safeguarding requirements may dictate retention of these records for a much longer period. This applies to operating records, accounting records, calibration records, etc.

2.3.4.3 International Inspection Provisions

An International Inspection Area (IIA) is likely to be a required component of the site. An IIA is used by international inspectors for inspection and verification of the plutonium. Prior to facility attachment negotiations with IAEA, this inspection is expected to be limited to PCV identification, gross weight, and gross radiation count. The IIA houses equipment provided by the international agency and contains files necessary to carry out authorized surveillance without allowing access to classified information. Inspection activities also include site visits for the purpose of reviewing records and information recorded by installed instrumentation and CCTV cameras that belong to the inspecting organization. Equipment located inside the inspection area may be operated by the inspectors remotely through a control room with direct viewing into the inspection area. Special uninterruptable power supply (UPS) and other systems would be provided by international agreements.

2.3.5 Safeguards and Security Requirements Related to Proliferation Resistance of the Ceramic Pellet Plutonium Disposal Option

The facility is projected to sustain a disposal rate year of 5 t of Pu immobilized in 500 t of inert cera material. Surge rates are anticipated to increase this by a factor of 2 to 10 t of Pu per year in 1,000 t of cera material. Thus, the facility must handle a minimum of 2 of Pu per operating day and twice this amount during operation. In addition, the Facility requires a 1-month ventory (417 kg) of Pu-loaded ceramic material in sto for processing operations. At the Receiving Facility material will be received in 208-L (55-gal) drums taining 14,860 pellets and 5.1 kg of plutonium, which be opened, inspected, and resealed. Furthermore, operations associated with the bucket delivery and delivery modes of emplacement of the pellet-grou ture within the borehole involve processing of batche pellets containing 834 kg and 200 kg of plutonium, resp tively. These figures represent the plutonium flow rate the areas where handling, interim storage, and disp operations are being carried out.

DOE Orders set rigid guidelines for determin Category I, II, III, and IV materials when Pu is the atta tive element. Each sample category is defined by an tractiveness level," which grades the material against of criteria associated with its material form and/or elem tal purity, and a "kilogram quantity level," which is ply a measure of the mass of Pu present in the sample. Category assigned to a collection of Pu-laden mate directly determines their security protection level. Hi grade Pu materials, without regard to form, are ide as Category I or II materials and require the highest le of protection if they exceed an aggregate Pu mass of 2 From the discussion in preceding paragraph, although pellet contains only 0.3432 g of Pu, the expected colle tions of pellets in any one place at the facility exceed the 2 kg limit to allow for projected disposal eration rates.

A fundamental uncertainty regarding material attra tiveness for immobilized forms is whether, for exampl high-grade plutonium, immobilized and diluted in an ert matrix, can be identified with a lower level of attra tiveness (i.e., classified as "other materials" with attractiveness level E and a corresponding Category assignment). In principle, this would significantly low the fissile material category and would thereby lower necessary level of protection. Pelletized forms are sma [2.54-cm-diam (1-in.)] spheres that have the potential be easily removed from a site if handled in small batche

and in the absence of strict monitoring protocols. Thus, in the proposed Facility design, even though it would require the diversion of a great many pellets to provide a critical level of concern, the pellets will be handled in large batches under strict monitoring protocols to significantly reduce the diversion potential of individual pellets.

The issue of protection levels for Pu pelletized forms can be considered from another perspective as well. The term "Spent Fuel Standard" was coined by the National Academy of Sciences (1994) in their study *Management and Disposition of Excess Weapons Plutonium.* In brief, the NAS study suggested that Pu disposal forms should be "...rendered at least as proliferation resistant as the Pu existing in commercial spent fuel..." and stated that "...deep boreholes represent a class of options that go a long way towards eliminating the proliferation risks posed by excess weapons plutonium..." A recent interpretation by Rhoads (1995) of this standard succinctly states that the "...form of a material alone does not provide sufficient proliferation resistance." While the NAS study clearly focused on the attributes of the disposal form in the definition of the "Spent Fuel Standard," it failed to clearly state that the increased proliferation resistance conferred on a disposition method by physical inaccessibility and the prohibitive cost of retrieval of the disposed material should be included in the "Spent Fuel Standard." Clearly, the principal means by which the Deep Borehole Disposal concept satisfies the need for proliferation resistance is by making the material physically inaccessible Therefore, in applying the "Spent Fuel Standard," to this Deep Borehole Immobilized Disposal Alternative, the Standard should be more broadly interpreted to include not only the proliferation resistance conferred by the dilute form of the plutonium immobilized in ceramic pellets, but also the physical inaccessibility to all except the host country in possession of the site and the high cost of physically retrieving the disposed material.

In summary, when viewed from the perspectives of both the DOE regulations and the protection standards derived from the NAS study, at this time the Safeguards and Security requirements for the Pu-loaded ceramic pellet disposal option cannot be significantly moderated or relaxed below those stated above.

3. GENERIC SITE DESCRIPTION, SITE MAP, AND LAND USE REQUIREMENTS

3.1 Generic Site Description

The Deep Borehole Disposal Facility site described here is a generic site at a *hypothetical* geographical location in the United States called Deep Rock, USA. In developing this generic site description, the characteristics of an ideal site have been used for guidance to arrive at a realistic description of a site that can be found in a number of areas in the continental United States. Site information is provided at a level of detail sufficient to make an approximate assessment of the environmental impact at the site. The data provided includes the geographical and topographical features of the area, the subsurface geology and hydrology, the climate, the levels of seismic activity and wind speeds, the population densities and population centers, rail, road and air traffic access ways, and a site map.

3.1.1 Geographic Setting

The Deep Rock site, shown in Figure 3.1.1-1, is located in a rural area surrounded by farmland and characterized by low, rolling terrain. The average elevation above sea level is 200 m. The topography of the area is rather flat with a maximum topographic relief of 25 m over the 20 km × 20 km area shown in Figure 3.1.1-1. The Deep Rock River is a small river (8 m average depth × 100 m average width) that originates in a drainage basin (1,600 km^2 area) located on a low plateau (20 m high) to the north of the site. Approximately 815 million m^3 of water flows down the river each year with a threefold increase in flow rate during spring over that during summer. The river flows down off the plateau onto a flat plain and then flows to the southeast parallel to the northwest–southeast trending bluff at the plateau boundary. About 5 km

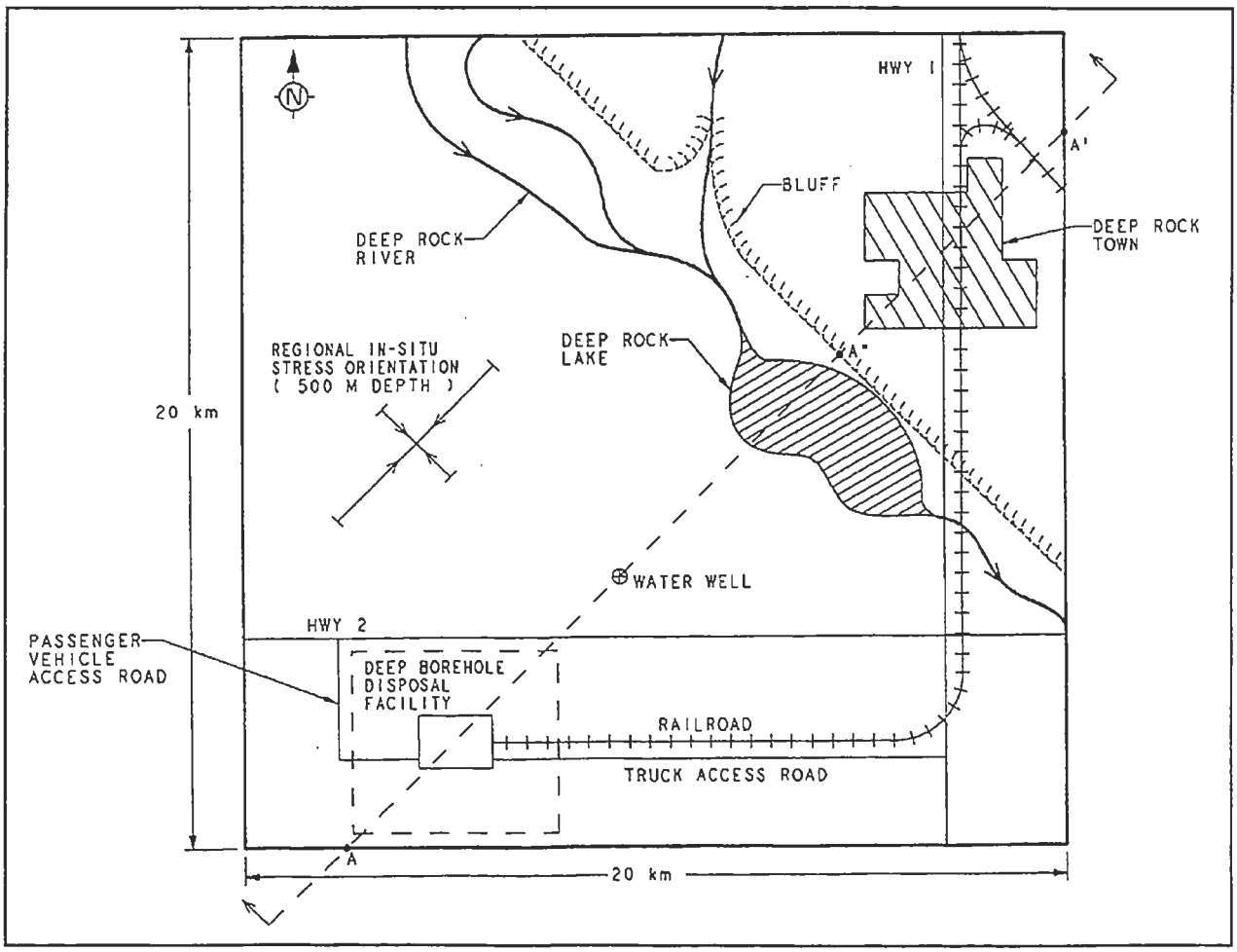

Figure 3.1.1-1. Geographic Generic Site Area Map of Deep Borehole Disposal Facility.

further downstream, the river flows into the shallow Deep Rock Lake (10 m avg. depth × 1 km wide × 4 km long) and then continues beyond the lake to flow southeast parallel to the bluff.

3.1.2 Climate

The Deep Borehole Disposal Facility site is located in the southwest corner of the area shown in Figure 3.1.1-1. The site is above the 100-yr flood plain of the Deep Rock River whose water level increases during spring by at most 1 m. The climate in the area can be characterized as semi-arid sub-humid. The average winter high temperature is –8.3°C and the average summer high temperature is 26.7°C. It is, however, a windy location, with winter blizzards and spring and summer tornadoes and a minimum basic wind speed level of 113–129 km/hr (70–80 mph) as defined in the Uniform Building Code.

3.1.3 Demographics

The nearest town, Deep Rock, is located 18 km from the site and has a declining population, now numbering about 4,000. The nearest city with a population greater than 50,000 is 60 km to the northeast from the site. The rural population density is less than 4 persons/km^2. There are no major commercial air traffic routes within 100 km, and the local instrument lanes for air traffic are 30 km away. Minor oil and gas pipelines are located 50 km from the site.

3.1.4 Natural Resources and Land Use

There are no known mineral resources, ongoing mining/resource extraction activities, or protected lands (parks, Indian lands, national forests) within 50 km of the site. The principal economic activity in the area is alfalfa, wheat, and sorghum farming concentrated in a narrow 1-km-wide strip along the southwestern bank of the Deep Rock River and the Deep Rock Lake, and with cattle and sheep ranching extending over a wider area. Water for use by the residents of the town of Deep Rock is obtained from the Deep Rock Lake. Although the farmers and ranchers rely primarily on surface water pumped from the River and the Lake, there is occasional reliance by the ranchers on well water for their livestock. The well water is pumped to the surface from an aquifer in the fractured siltstone and sandstone formation that underlies this area (see Section 3.1.5 below). The nearest water well, located at a distance of about 5 km from the Deep Rock Site, is a 150 m deep livestock watering well that is pumped 24 hr/day at a maximum rate of about 38 L/min (10 gal/min).

3.1.5 Subsurface Geology and Hydrology

The geology of the area consists of Precambrian crystalline rocks (Zones 3 and 4 in Figure 3.1.5-1) overlain by 250 m of well-cemented, interbedded Cambrian siltstone and sandstone (Zone 2). The Precambrian rock outcrops about 38 km from the site, in a wilderness area. The siltstone and sandstone is overlain by a thin clayey-silt soil cover (Zone 1) of 10 m average thickness and 20 m maximum thickness. The siltstones and sandstones in Zone 2 have a well developed fracture pattern with horizontal and vertical joint orientations and anisotropic permeability. Zone 3 is a moderately fractured granite with subvertical joints extending downwards from the Zone 2-Zone 3 boundary to a depth of 250 m. The deep crystalline rock in Zone 4, extending below 1,000 m, is a sparsely fractured granite of very low permeability.

The primary pathways for deep groundwater flow in the area are the Fault Zone Sets 1, 2, and 3 located in the crystalline rock Zones 3 and 4. The slightly dipping (1 in 5 slope) sub-horizontal thrust Fault Zones in Sets 2 and 3 terminate against the steeply-dipping (10 in 1 slope) subvertical normal Fault Zones in Set 1. The fault zones belonging to the subvertical Fault Zone Set 1 are 20 m thick and persist to a depth of about 5,000 m with decreasing permeability. Fault Zones in Set 2 are 20 m thick while those in Set 3 are 5 m thick. The sub-horizontal fault zones and to a lesser extent the subvertical fault zones, are connected to the joints in Zone 2 and the subvertical joints in Zone 3. The hydraulic and transport properties of these hydrogeologic zones are given in Table 3.1.5-1.

The water table is rather shallow in the area ranging from 1 m depth in low lying areas to 5 m depth in topographically high areas. Consequently, the water table closely follows the surface topography of the area. Infiltration and percolation of rain and snowmelt recharges the groundwater flow systems in the soil from the topographic highs. The water table reaches the annual maximum levels when the spring snowmelts are supplemented by rainfall. Water levels recede during the summer due to moisture loss by evapotranspiration. Typically, water table fluctuations are small (less than 1 m), and, after normal water table levels are reached, most of the rainfall runs off to surface streams that in turn flow into the Deep Rock River and the Deep Rock Lake. It is estimated that only 2% of the total snowmelt [18 cm (7 in.)] plus rainfall [33 cm (13 in.)] equivalent of 51 cm (20 in.) precipitation a year reaches the water table. The small amount of water that does reach the water table by direct infiltration through the soil, flows along the soil cover in Zone 1 and, to a lesser extent, through the fractured siltstones and sandstones in Zone 2 to the Deep Rock River.

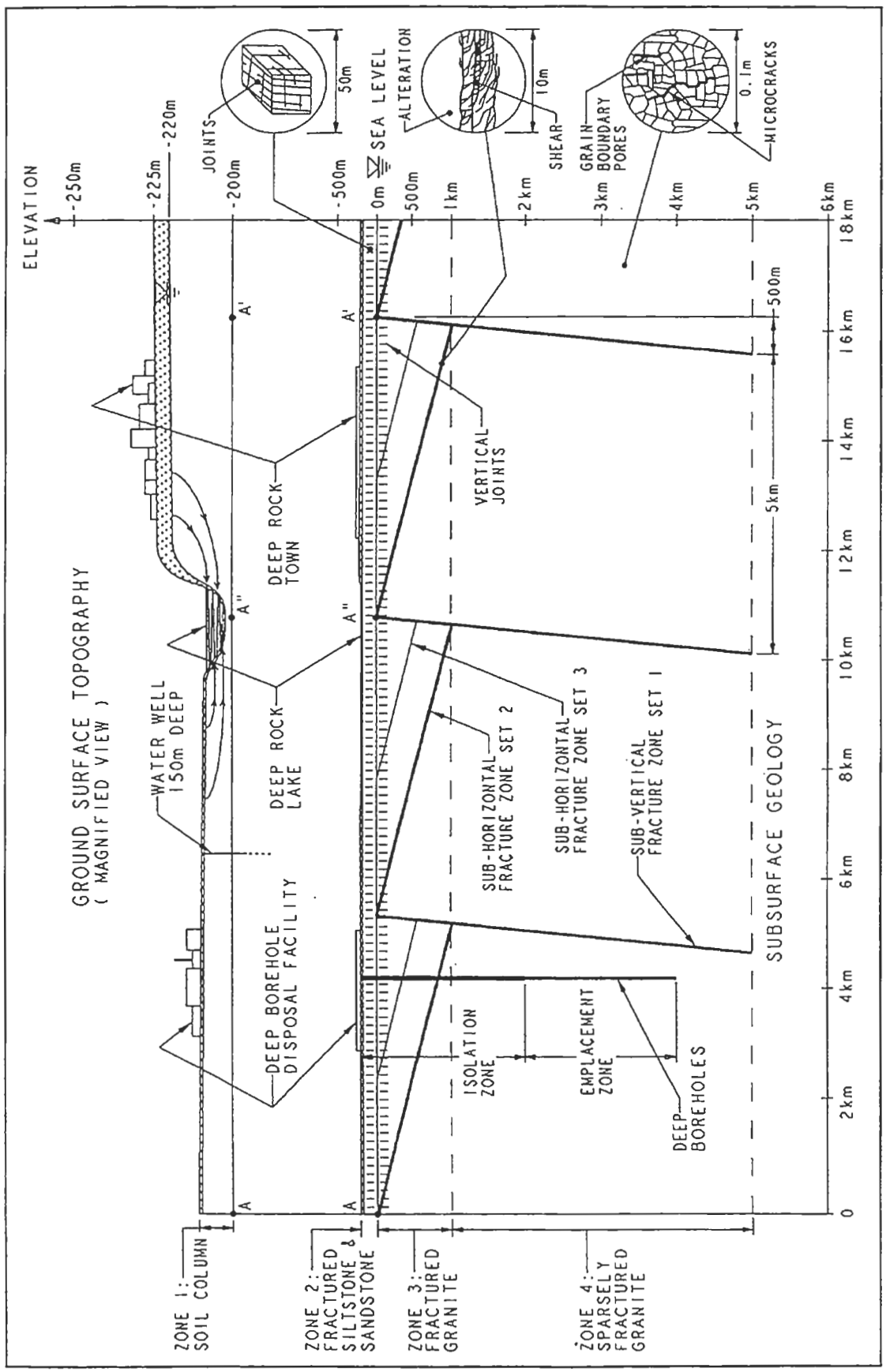

Figure 3.1.5-1. Geologic Cross Section on A-A′ (Figure 3.1.1-1) of Hydrogeologic Features at the Deep Borehole Disposal Facility Site.

Table 3.1.5-1. Hydraulic and Transport Properties of the Hydrogeologic Zones.

Hydrogeologic zone	Depth range (m)	Thickness (m)	Porosity (fraction)	Horizontal/ longitudinal permeability (m^2)	Vertical/ lateral permeability (m^2)	Partition coefficient K_d (mL/g)	Retardation factor R for Pu[1]	Salinity (g/L)
Zone 1: Soil cover	–275 to –250	25	3.0×10^{-1}	1.0×10^{-13}	5.0×10^{-13}	301	1,200	0.1
Zone 2: Fractured siltstone, sandstone	–250 to 0	250	5.0×10^{-2}	1.0×10^{-15}	5.0×10^{-15}	146	31,900	0.5
Zone 3: Moderately fractured granite	0 to 250	250	1.0×10^{-2}	1.0×10^{-17}	5.0×10^{-15}	10.5	2,900	10
Zone 3: Moderately fractured granite	250 to 1,000	750	5.0×10^{-3}	1.0×10^{-17}	1.0×10^{-16}	10.5	5,840	10
Zone 4: Sparsely fractured granite	1,000 to 2,000	1,000	3.0×10^{-3}	1.0×10^{-21}	1.0×10^{-21}	3.02	2,810	50
Zone 4: Sparsely fractured granite	2,000 to 3,000	1,000	2.0×10^{-3}	1.0×10^{-22}	1.0×10^{-22}	1.78	2,490	100
Zone 4: Sparsely fractured granite	3,000 to 5,000	2,000	1.0×10^{-3}	1.0×10^{-23}	1.0×10^{-23}	1.31	3,660	150
Zone 4: Sparsely fractured granite	5,000 to 8,000	3,000	1.0×10^{-4}	1.0×10^{-24}	1.0×10^{-24}	0.78	21,700	300
Fault Zone Set 1	0 to 1,000	20	5.0×10^{-2}	1.0×10^{-13}	5.0×10^{-14}	21.5	900	10
Fault Zone Set 1	1,000 to 2,000	20	4.0×10^{-2}	5.0×10^{-14}	2.5×10^{-14}	8.17	432	50
Fault Zone Set 1	2,000 to 3,000	20	3.0×10^{-2}	1.0×10^{-14}	5.0×10^{-15}	5.83	415	100
Fault Zone Set 1	3,000 to 5,000	20	2.0×10^{-2}	5.0×10^{-15}	2.5×10^{-15}	4.90	529	150
Fault Zone Set 2	0 to 1,000	20	5.0×10^{-2}	1.0×10^{-13}	5.0×10^{-14}	21.5	900	10
Fault Zone Set 3	0 to 500	5	5.0×10^{-2}	1.0×10^{-13}	5.0×10^{-14}	21.5	900	10

[1] Retardation factor (dimensionless) is defined by $R = 1 + [(1 - \phi)/\phi]\rho K_d$, where ϕ is the porosity, ρ is the solid density (g/mL), and K_d is the partition coeffient (mL/g).

The deep groundwater system is hydraulically connected to the fractured Zone 2 primarily through the subvertical joints in Zone 3. Therefore, any surface recharge into the deep groundwater flow system must occur through water infiltrating downwards from the Deep Rock River through the joints in Zones 2 and 3 to the faults in Fault Zone Sets 2 and 3 and to a lesser extent in Fault Zone Set 1. However, because the low topographic relief at the surface provides minimal hydraulic potential difference for driving fluid flows, and, because the permeabilities of the rock in Zone 4 and the fractures in Fault Zone Set 1 below 2 km depth are very low, it is unlikely that the deep groundwater flow is significantly affected by surface recharge.

3.1.6 Seismicity and Geologic Stability

It is known that the region in which Deep Rock Site is located is extremely stable tectonically with no recorded earthquakes with a Mercalli intensity above V. It falls in the 0–1 seismic zone category range, as defined in the Uniform Building Code, corresponding to seismic accelerations of less than 0.075 g. The region does not have any recorded volcanic or geothermal activity, and exploratory drilling for resource delineation and scientific purposes have established that the underlying crystalline rock has remained undisturbed for hundreds of millions of years. The geothermal gradient in this rock is moderate and relatively uniform at 15°C/km. The salinity gradient, however, exhibits significant variation on shorter spatial scales superimposed on an increasing average trend with increasing depth. For example, as indicated in Table 3.1.5-1, the average salinity gradient at the site increases from 1% per km between 0–1 km depth, to 4% per km between 1–2 km depth, to 6% per km between 2–3 km depth; the salinity appears to reach a maximum of about 350 g/L beyond 8 km depth. Dating studies performed on the brines below 1.5 km depth indicate that they are likely to be the original connate waters trapped in the rock at the time the crystalline rock masses were first formed.

3.1.7 Site Map

The Site Map of the Deep Borehole Disposal Facility is given in Figure 3.1.7-1. The map shows the Security Boundaries and Buffer Zone surrounding the facility. It also shows the 4 boreholes required by this immobilized deep borehole disposal facility design and the spacing between the boreholes in the array. Detailed descriptions of the facilities are given in Section 2.1.3. Figure 2.1.2-2 shows in more detail the layout of the facility in both the Main Facility and Borehole Array areas. It also shows the access routes for off-site transportation, and the two on-site transportation routes for trucks bearing the disposal form.

3.2 Land Area Requirements During Operation

The number of acres required to accommodate the footprints of the Deep Borehole facilities is listed in Table 2.1.3-1, Facilities Data. The Deep Borehole Disposal Facility requires approximately 2,041 hectares (5,044 acres) of land for the entire facility and its 1.6-km-wide (1-mile) Buffer Zone. Of this area, 32 hectares (78 acres) is occupied by the Main Facility, 25 hectares (62 acres) by the Borehole Array, and 1,873 hectares (4,628 acres) by the Buffer Zone. The total land area disturbed during the operation period is approximately 56 hectares (139 acres).

During the Closure period, the main facility area of the Deep Borehole Disposal Facility will be restored and returned to natural conditions. During closure activities the Deep Borehole Disposal Facility requires the same land area as during its operation phase, and the total disturbed land area will be the same at approximately 56 hectares (139 acres).

During the Post-Closure period the Borehole Array area of 25 hectares (62 acres) will be declared a limited access area indefinitely, and a 1.6-km (1-mile) Buffer Zone of 1,358 hectares (3,355 acres) may also be declared off limits. Thus, the Borehole Array area will require approximately 1,383 hectares (3,417 acres) to be declared off limits. The total disturbed land area during the Post-Closure period will be the approximately 0.1 hectare (0.25 acre) occupied by the 15 m × 15 m (50 ft × 50 ft) concrete security and anti-water infiltration caps installed above the four boreholes.

3.3 Land Area Requirements During Construction

3.3.1 Land Use

The Deep Borehole Disposal Facility requires approximately 4 hectares (10 acres) of land for construction laydown and warehousing and 2 hectares (5 acres) for construction parking.

3.3.2 Off-Site Transportation

A minimum of 1.6-km (1-mile) two-lane paved road and railroad spur track will have to be constructed to the Deep Borehole Disposal Facility site for workers transportation and material and equipment delivery. The length of the road connections depends on the specific site.

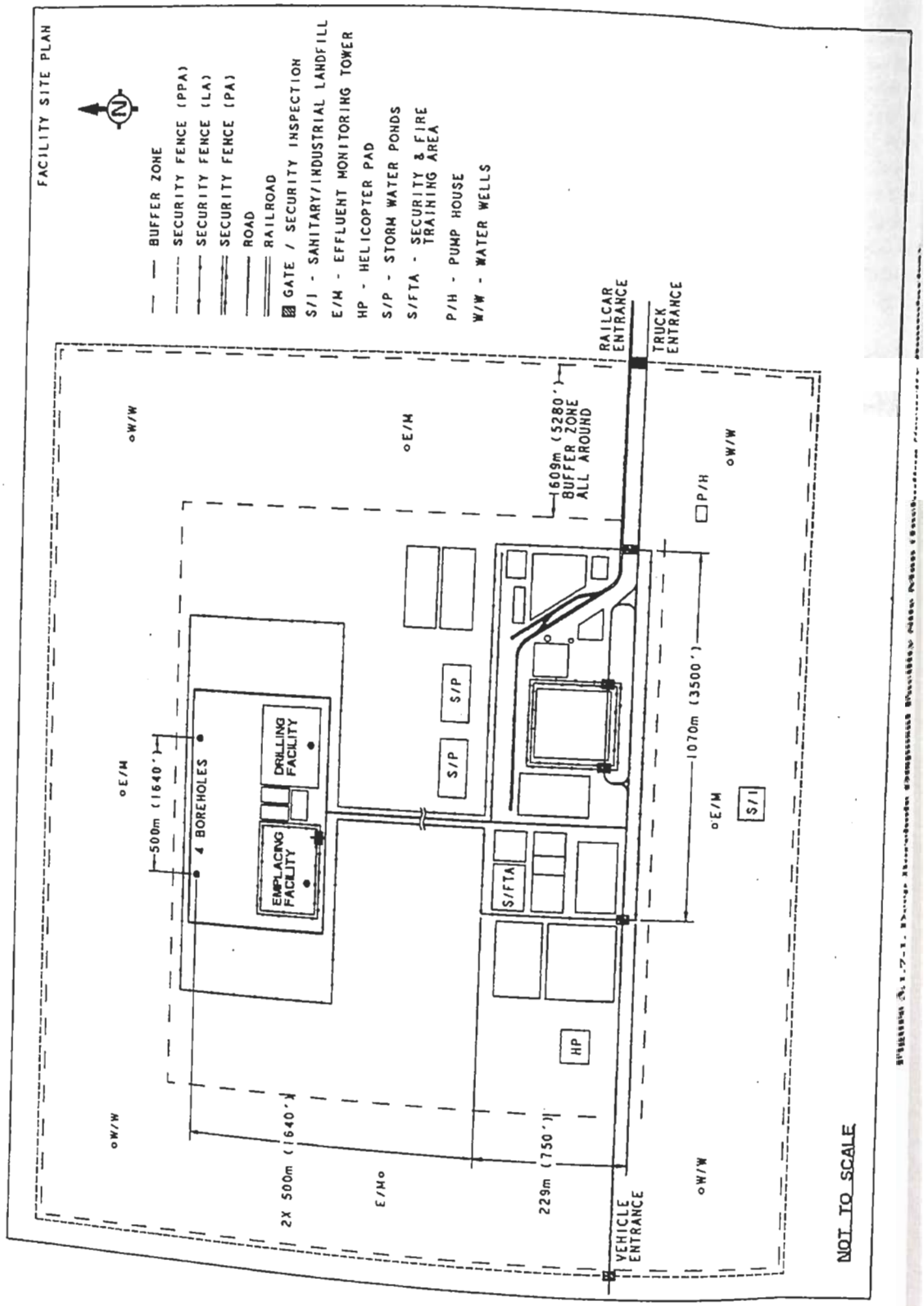
FACILITY SITE PLAN
N
BUFFER ZONE
SECURITY FENCE (PPA)
SECURITY FENCE (LA)
SECURITY FENCE (PA)
ROAD
RAILROAD
GATE / SECURITY INSPECTION
S/I - SANITARY/INDUSTRIAL LANDFILL
E/M - EFFLUENT MONITORING TOWER
HP - HELICOPTER PAD
S/P - STORM WATER PONDS
S/FTA - SECURITY & FIRE TRAINING AREA
P/H - PUMP HOUSE
W/W - WATER WELLS
RAILCAR ENTRANCE
TRUCK ENTRANCE
609m (5280') BUFFER ZONE ALL AROUND
W/W
E/M
P/H
S/P
S/P
S/FTA
S/I
HP
DRILLING FACILITY
EMPLACING FACILITY
4 BOREHOLES
500m (1640')
2X 500m (1640')
229m (750')
1070m (3500')
VEHICLE ENTRANCE
NOT TO SCALE

4. PROCESS DESCRIPTIONS

The Deep Borehole Disposal Facility accepts plutonium immobilized in ceramic-coated ceramic pellet disposal form. Other options exist, such as plutonium immobilized in glass or directly as metal, chopped pits, or plutonium dioxide. The disposal form is emplaced in deep competent rock with ancient, nearly dormant brine. It is sealed in place to minimize brine intrusion and to prevent criticality. The disposal form is received and stored at the surface processing facility pending transportation on-site to the emplacement facility where it will be mixed with grout. Deep boreholes are drilled to a depth of about 4 km and partially cased. The emplacement and sealing facility is located near the boreholes to prepare the ceramic pellet–grout mix and emplace it at depth in the boreholes.

4.1 Surface Processing Facility

4.1.1 Function

The process flow diagram for the Surface Processing Facility is shown in Figure 4.1.1-1 together with its waste treatment process flow diagram. The overall facility flow diagram was previously presented in Figure 2.1.1-1. The immobilized Pu-loaded coated ceramic pellet disposal form is delivered in transportation containers to the Surface Processing Facility from an immobilization facility. In the Surface Processing Facility, the transportation containers are opened and inspected, and if more than a specified number of ceramic pellets are damaged the container is closed and returned to the immobilization facility. The containers meeting the acceptance criteria are stored in the Facility until required by the Emplacing–Borehole Sealing Facility as feed material.

At the emplacement facility, the coated Pu-loaded ceramic pellets in these containers are mixed with an equal volume of uncoated non-Pu-loaded filler ceramic pellets. The ceramic pellet mixture is then mixed with grout to produce a ceramic pellet–grout feed material with 30% by volume Pu-loaded ceramic pellets, 30% by volume non-Pu-loaded ceramic pellets, and 40% by volume grout for emplacement in the borehole. The filler ceramic pellets are inexpensive uncoated commercial grade pellets of the same ceramic chemical composition as the Pu-loaded ceramic pellets produced by the immobilization facility. The purpose of the filler ceramic pellets is to reduce the effective plutonium loading of the mixture of 1% Pu-loaded pellets and the non-Pu-loaded pellets to 0.5% by mass. In this way, an additional measure of criticality safety is achieved while cutting the volume and cost of the Pu-loaded ceramic pellets in half.

The pellet–grout mix is emplaced by one of two methods: delivery by a bucket lowered into the borehole or by pumping down a delivery pipe inserted into the borehole. With the latter method, this pellet–grout mix is pumped into a 152-m-long (500-ft) pipe bucket and the bucket is lowered into the borehole. Under gas pressure, the mix is slowly released from the bucket. During this process, a vibratory compactor attached to the bucket is used to compact the most recently released part of the pellet–grout mix. The emplacement and sealing procedures are described in Section 4.3.1.

4.1.2 Feeds

The plutonium disposal form is a ceramic-coated plutonium-loaded ceramic pellet produced at a separate immobilization facility. The ceramic pellets are assumed to be delivered in drums in DOT approved transportation containers via transportation trucks meeting security requirements appropriate to this disposal form. Confirmatory and accountability measurements are made after unpacking the pellet-containing drums. The ceramic pellets, prior to being mixed with grout, are stored in a shielded storage vault in the drums in which they are delivered. The uncoated non-Pu-loaded ceramic pellets are purchased from a commercial vendor and are delivered to the site in 208-L (55-gal) drums by commercial trucks.

The feed rate of the ceramic coated plutonium loaded ceramic pellet disposal form to the Surface Processing Facility is the equivalent of 5 t/yr of plutonium. At a plutonium loading of 1.0% by weight (without neutron absorber poisons) this amounts to 500 t/yr of ceramic disposal form. The feed rate of the uncoated non-Pu-loaded ceramic pellets is also equal to 500 t/yr.

4.1.3 Products

Ceramic pellets are transferred to the Emplacing–Borehole Sealing Facility for mixing with grout via an intrasite transporter. The ceramic pellets are dumped to a feed bin in the grouting facility. They are metered in a feed hopper and are mixed with a batch of premixed cement grout in a grouting vessel. At present, the grout is assumed to be cement based, but the grout composition may be changed in the future (e.g., a bentonite clay based product) when planned R&D results become available to guide the selection of an appropriate grout. The ceramic pellet–grout mixture is transferred to the emplacing facility and is emplaced in the borehole. The used ceramic shipping container is recycled after decontamination.

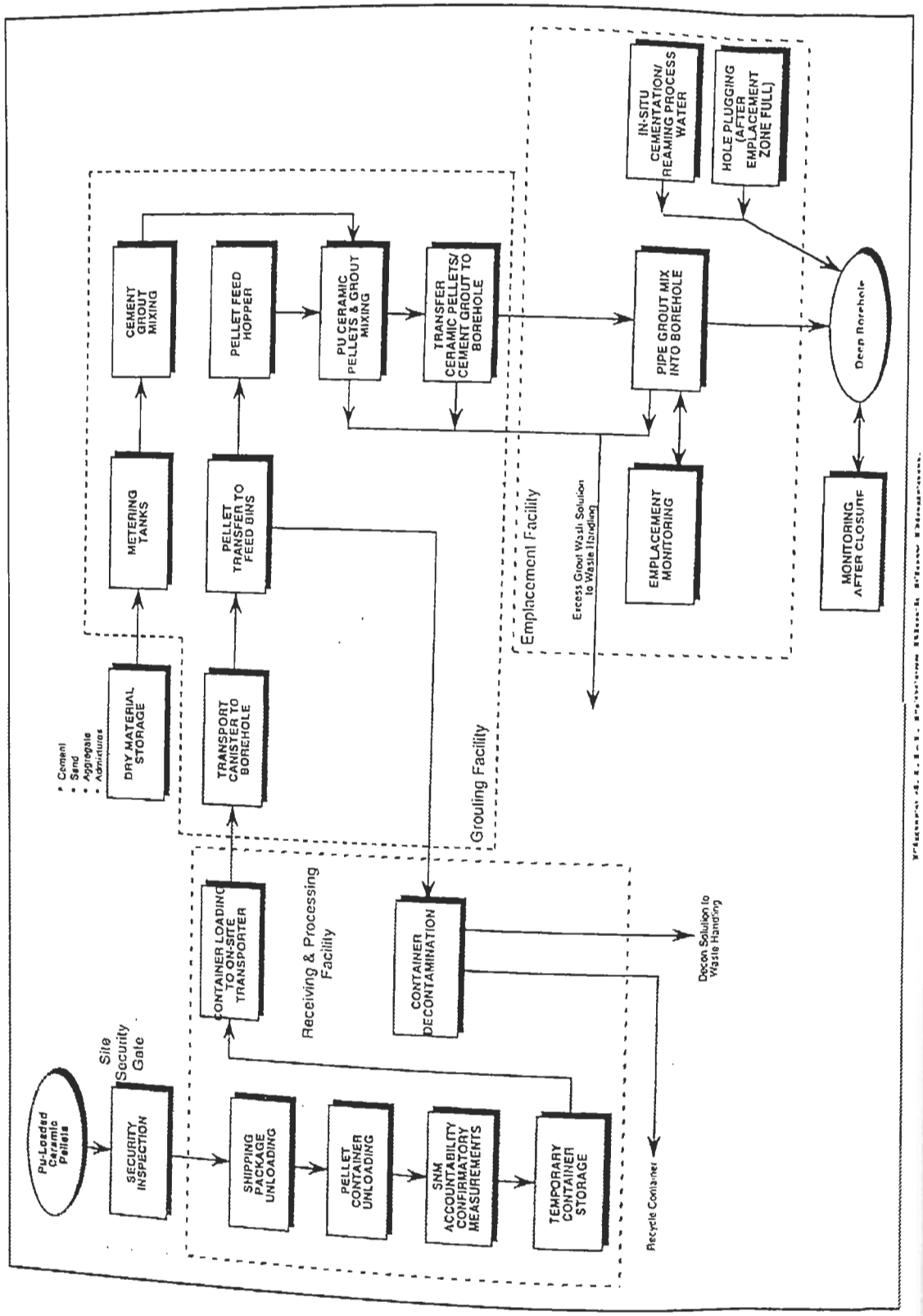
Pu-Loaded Ceramic Pellets
Site Security Gate
SECURITY INSPECTION
SHIPPING PACKAGE UNLOADING
PELLET CONTAINER UNLOADING
SNM ACCOUNTABILITY CONFIRMATORY MEASUREMENTS
TEMPORARY CONTAINER STORAGE
Recycle Container
CONTAINER LOADING TO ON-SITE TRANSPORTER
Receiving & Processing Facility
CONTAINER DECONTAMINATION
Decon Solution to Waste Handling
TRANSPORT CANISTER TO BOREHOLE
DRY MATERIAL STORAGE
Cement
Sand
Aggregate
Admixtures
METERING TANKS
CEMENT GROUT MIXING
PELLET TRANSFER TO FEED BINS
PELLET FEED HOPPER
PU CERAMIC PELLETS & GROUT MIXING
TRANSFER CERAMIC PELLETS/ CEMENT GROUT TO BOREHOLE
Grouting Facility
Excess Grout Wash Solution to Waste Handling
PIPE GROUT MIX INTO BOREHOLE
EMPLACEMENT MONITORING
Emplacement Facility
IN-SITU CEMENTATION/ REAMING PROCESS WATER
HOLE PLUGGING (AFTER EMPLACEMENT ZONE FULL)
Deep Borehole
MONITORING AFTER CLOSURE

The Surface Processing Facility receives, stores, and ships approximately 500 t/yr of Pu-loaded ceramic to the Emplacement Facility. During surge operation at 10 t/yr of plutonium, this rate will double to 1,000 t/yr.

4.1.4 Utilities Required

The processing at surface facilities requires electrical power, compressed air cylinders, and water for utility functions.

4.1.5 Chemicals Required

Cement grout and grout additives are used to mix with the ceramic pellets.

4.1.6 Special Requirements—Support Systems

The process systems required to support the disposition process include the cold chemical makeup systems, process gas supply systems, feed and product storage systems, and material control and accountability system:

- *Storage Vaults:* For ceramic aggregate shipping container storage, 3 months storage capacity.
- *Cold Chemical Storage and Makeup System:* For cement, cement additives, etc. storage. Storage capacity of 3 months for storage tanks or silos and one day for makeup tanks.
- *Gas Supply System:* For glovebox gas in the Process Waste Management Facility, 3 months storage capacity.
- *Material Control and Accountability System:* A material control and accountability system with nondestructive assay and computer systems is required for plutonium material control and accountability (MC&A). The system includes bar code readers, scales, nondestructive assay devices, tamper-indicating item inventory devices, and computers. MC&A is applied to every process transfer point that involves plutonium material. Also, a SNM physical inventory is performed every 6 months in accordance with DOE Order 5630.2.

4.1.7 Waste Generated

4.1.7.1 Emissions and Effluents

Under normal operating conditions, no radioactivity will be released to the atmosphere during inspection of the transportation containers. If any ceramic pellets that are delivered are damaged, small amounts of plutonium-containing ceramic dust could escape during the inspection process. In that event, the escaped dust will be collected by the process area ventilation system. Air exhaust from plutonium handling and storage areas of the Receiving and Process Facility are discharged to the atmosphere in an exhaust stack after two-stage HEPA filtration. The stack release is continuously monitored by an isokinetic air monitoring system.

4.1.7.2 Solid and Liquid Wastes

The wastes generated by the Surface Processing Facility will be sampled for radioactivity and, if free of radiation, will be stored for disposal in an off-site sanitary/industrial disposal facility. If contaminated with radiation, they will be treated as low-level/TRU waste. Solid waste generated from process operations at the surface facilities includes shipping packing materials, deformed Pu-loaded ceramic pellet shipping containers, wipes and rags, gloves and paper clothing, and HEPA filters. Liquid waste includes wash water from container decontamination, spent pump oils, and TCA cleaning solvent. The wastes are sent to the waste handling building for treatment.

4.2 Drilling Facility

4.2.1 Function

The process flow diagram for drilling is given in Figure 4.2.1-1 together with the waste treatment process flow diagram for the Drilling Facility. The operations involved in drilling are the preparation of the drilling mud with appropriate additives and maintaining the mud column at the proper density, pumping water out when needed to control water inflow from conductive aquifers and fractures, using mud additives and plugging back these features to control the inflows, and installing steel casing and cementing behind the casings as the drilling progresses. The rock cuttings may be left in the mud pits rather than being transported to another location for disposal as may be required by state and local regulations. It is customary to leave the cuttings in the mud pit and to cover the mud pit with soil following completion of the drilling process.

The borehole will be drilled using technology that has been used extensively in the petroleum industry. The drilling system consists of a drill rig (or derrick), which is used to lower and raise the drill pipe and the drill bit in the borehole, and the associated drilling mud- and fluids-handling support facilities. A motorized winch called the draw works provides the lifting power of the derrick. The drillstring (a series of connected pipe sections) permits the control of the drill bit itself. A mud mixture containing water, compressed air, and possibly bentonite is pumped into the borehole to bring up to the surface the material

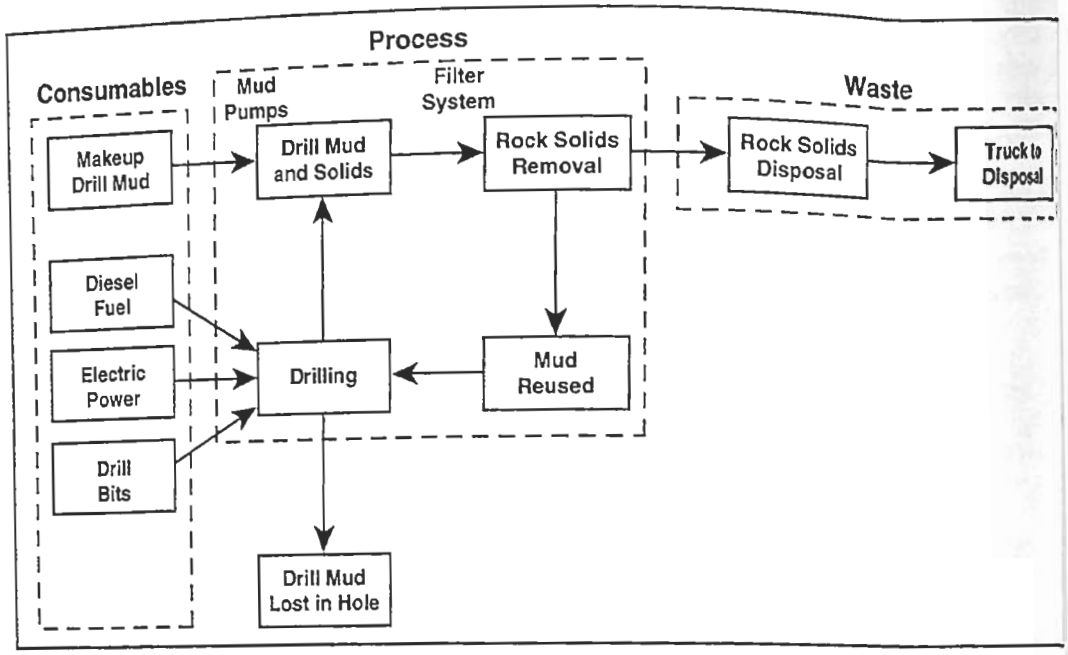

Figure 4.2.1-1. Drilling Process Flow Diagram.

that has been drilled from the borehole. The drilling mud is sent into a shale shaker to allow the solids to settle out. The mud is then filtered to remove the fine particles and is returned to the pumping system. When drilling holes of large size, it is more appropriate to use what is referred to as dual string drilling. In this configuration, two drill pipes are used, one inside the other. The drilling fluid flows into the hole through the outer pipe in the annulus, and the cuttings flow through the center pipe up to the top of the borehole. Holes larger than about 0.66 m (26 in.) diameter are generally drilled in this manner. This is done to reduce the amount of drilling fluid that is required. The most important component in the drill rig is the drill bit, which consists of rolling cones with cutters distributed on their surfaces. The cutters are typically made from hardened steel or tungsten carbide. Diamond bits could also be used. In this case, industrial diamonds are impregnated into the drilling surface of the bit.

Large diameter boreholes are usually drilled with the borehole diameter decreasing with depth in a stepwise fashion as shown in Figure 4.2.1-2. The process starts with a relatively large diameter drill bit, which is used to drill down to some desired depth. A metal liner (or casing) that has an outside diameter smaller than the borehole is then inserted into the borehole. A cement slurry is then pumped at high pressure in the annulus between the casing and the rock formation. Casing the borehole and cementing behind it serves several purposes. First, it seals the void space between the casing and the borehole wall and eliminates this pathway for convective fluid circulation and transport of mobilized plutonium to the biosphere. Because this is a key factor that would affect the performance of the Deep Borehole Disposal Facility, it is essential that a high quality cementing job be performed under a strict quality assurance program that employs borehole logging tools for verification. Second, it prevents ground water from aquifers in the upper portion of the hole from entering the borehole and flooding it. Third, at greater depth it will prevent brines from entering the borehole during drilling. Fourth, it prevents collapse of the borehole in the upper regions of the borehole where more unstable soils and unconsolidated rocks are usually found. Lastly, it permits the sealing of fractures in the rock formations that intersect the borehole. The casing and cementing process flow diagram is shown in Figure 4.2.1-3.

At specific locations in the borehole, the hole will be under-reamed (i.e., undercut) to a diameter larger than that of the basic hole. Special cutting tools exist for drilling and enlarging the hole diameter to provide a seat for seals plugs at various depths. The seals and plugs are required to prevent the vertical migration of fluids; they will be installed in the emplacement zone during emplacement of the ceramic pellet–grout mix and in the isolation zone during closure of the borehole.

The drilling operation has been examined by drilling experts from Reynolds Electric and Engineering Co. Inc. (REECO) for purposes of determining the data required for this report; their detailed analysis can be found in Russell (1994). They estimated that the time required

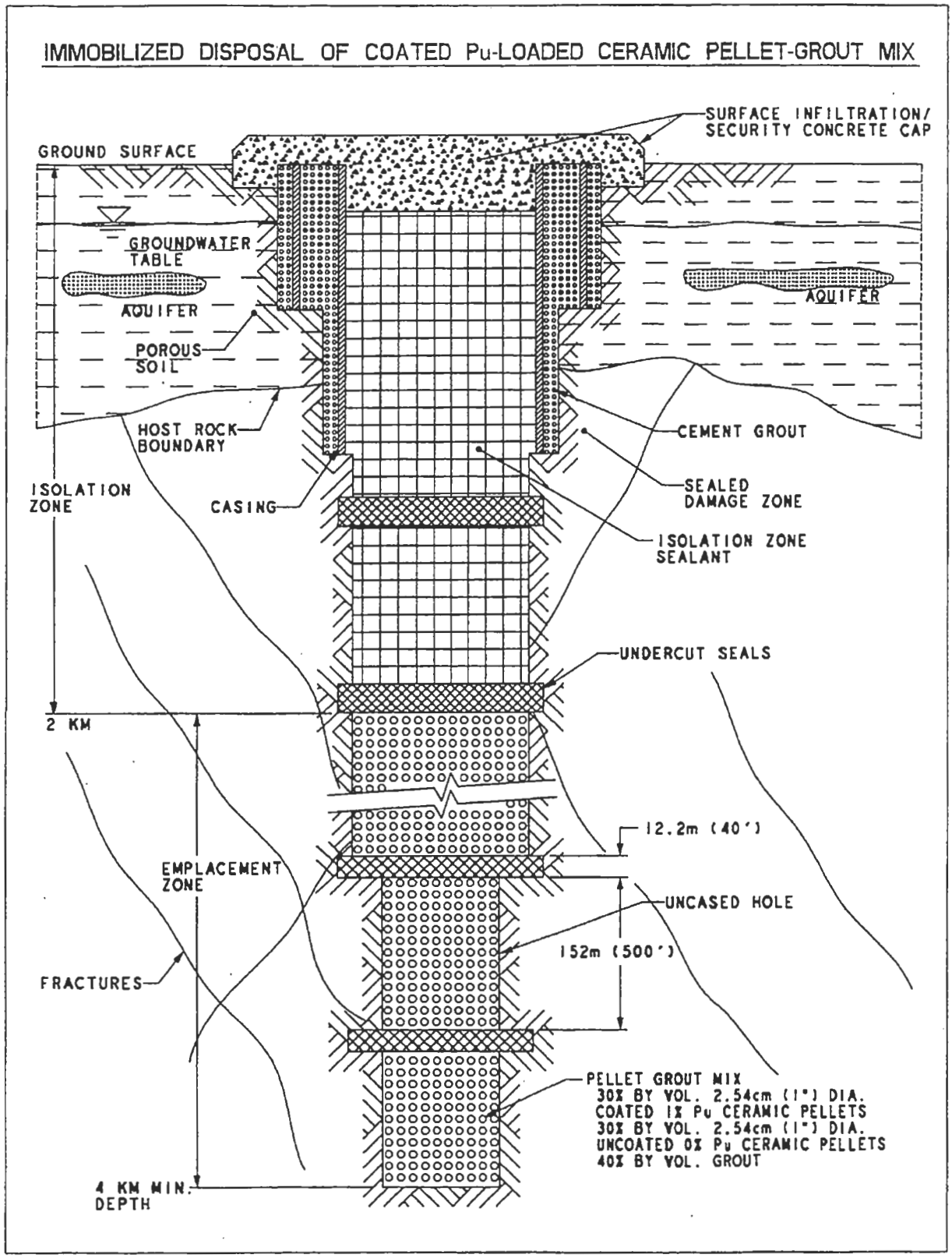

Figure 4.2.1-2. Borehole Configuration Geometry for Immobilized Disposal of Coated Ceramic Pellets in Grout.

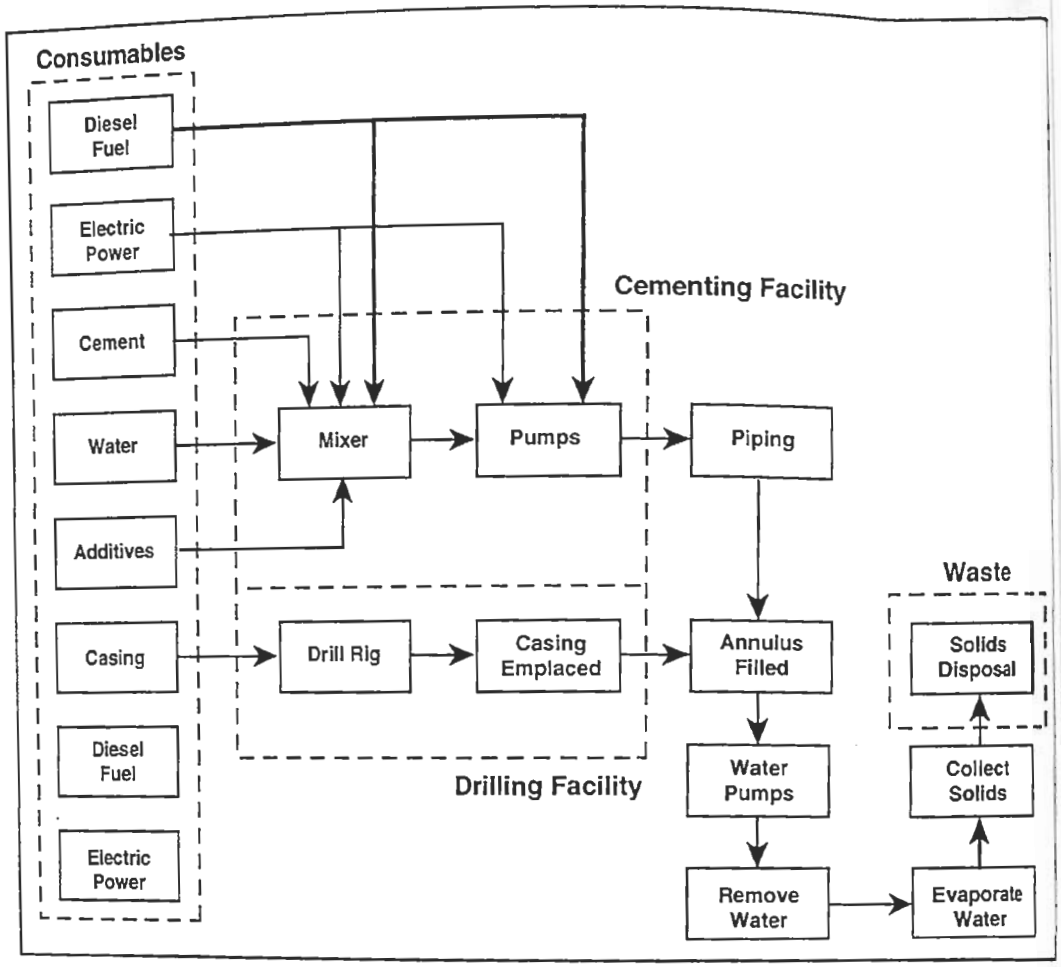

Figure 4.2.1-3. Casing and Cementing Process Flow Diagram.

drill a single borehole of the diameter and depth considered here is from 10 to 11 months using two 12-hr shifts a day by rotating three crews.

Other borehole size and configuration scenarios might be desirable for this application. For example, depending upon the particular geology at the selected site, a larger number of deeper boreholes of smaller diameter may be optimal from the standpoint of drilling efficiency. On the other hand, where the geology permits, shallower boreholes of larger diameter may be optimal from the standpoint of emplacement volumetric efficiency and may reduce the total number of holes required to emplace a fixed amount of plutonium. However, the feasibility and advantages of these different alternatives will depend upon their impact on the upstream processes (such as disposal form transportation, processing, and packaging) and must evaluated from a systems viewpoint.

A substantial development effort to design the drill rigs, handling equipment, and high-strength steel casing will be required. The drill rig design is most likely to be a scaled-up version of a high-capacity petroleum industry drill rig.

4.2.2 Feeds

Very large quantities of materials such as drilling muds, grouts, casing, and chemical additives will be required for operating the Drilling Facilities. These are described below.

The drilling process requires the circulating water in drilling muds to be periodically replaced by fresh mud, water, and chemicals. The chemicals include polymers, soaps, and pH-control additives.

The process of plugging back conductive aquifers and sealing fractures and the near-borehole damage zone requires specially formulated API (American Petroleum Institute)–grade grouts and grout additives as feed materials. The exact composition of the drilling mud cannot be determined until a site has been selected and the geology has been identified to some degree.

The process of casing the borehole in the upper 2 km isolation zone and cementing behind the casings to plug the voids between the casing and the borehole requires specially formulated grouts and steel casing pipes of various diameters and wall thicknesses.

4.2.3 Products

There are no products in this operation. Wastes generated by the process are identified in Section 4.2.7.

4.2.4 Utilities Required

A diesel generator will provide operating power to each drilling rig. A backup diesel generator is also provided for each drilling rig.

4.2.5 Chemicals Required

The primary process materials required for the drilling process are those required to prepare the drilling mud. No treatment of the small amounts of briny water in the borehole will be required. It will be contained by the sealing process by in situ solidification of the grout pumped into the borehole and will be incorporated into the cement during its hydration and solidification. Additional grouts are required for sealing the soil and rock formations and cementing behind the casing.

4.2.6 Special Requirements

4.2.6.1 Monitoring for Naturally Occurring Radiation

Drilling operations have a small potential for releasing naturally occurring radiation into the atmosphere where it might affect workers. Therefore, monitoring at the top of the borehole and bottom of the drill string for alpha, beta, and gamma radiation during drilling operations will be required.

4.2.6.2 Monitoring for Hydrogen Sulfide

A potential exists for hydrogen sulfide to be released from the rock formations during drilling. Thus, there will need to be monitoring at the borehole to ensure the safety of the workers.

4.2.7 Waste Generated

4.2.7.1 Emissions and Effluents

With the exception of engine exhaust fumes and dust, there are no atmospheric emissions in the drilling process. The primary effluents from drilling are the overflow of briny water from the mud ponds and the briny water that would be pumped out from the well from conductive features in the rock. These wastewaters are treated as described in Section 4.2.7.2.

4.2.7.2 Solid and Liquid Wastes

The solid rock cuttings brought out of the borehole by the drilling mud settles out in the drilling mud pit. For a telescoping borehole with a 1.83-m-diam (72-in.) hole drilled to 24.7 m (81 ft), a 1.32-m-diam (52-in.) hole to 2 km (6,560 ft), a 0.91-m-diam (36-in.) hole to 3 km (9,840 ft), and a 0.66-m-diam (26-in.) hole drilled to 4 km (13,120 ft), the volume of rock removed from a single borehole would be about 3,340 m^3. The cuttings volume, however, would be as much as 1.5 times this volume because of bulking. These cuttings would contain some of the drilling mud additives and the briny water at depth. The exact makeup of the additives will not be known until the geology of the site has been ascertained and an appropriate mud program developed. However, they will be selected from approved standard stock items in the petroleum industry. A common drilling practice is to leave the cuttings in the mud pit, which is covered with soil at the completion of drilling operations. Should future or local regulations require other disposal methods, the pits can be lined and the cuttings removed for alternative disposal.

Wastewater generated by the drilling process is tested and then treated as needed by allowing the water to evaporate and burying the residual solids in the mud pits. There is no expectation that the water from the drilling mud will require any treatment.

4.3 Emplacing–Borehole Sealing Facility

4.3.1 Function

The flow diagram for the Emplacing–Borehole Sealing process is given in Figure 4.3.1-1. The pellets are transported by truck from the Surface Processing Facility to the emplacement facility. The emplacement/cementing facility is located at a borehole that has been drilled and cased after aquifer, fracture, and near-borehole damage zones in the upper 2 km sealing zone have been sealed. Also, as a part of drilling the borehole, fractures and near-borehole damage zones in the lower 2 km emplacement zone will be sealed. The feasibility of sealing these features in the host rock in a large-diameter uncased borehole using, for example, multiple inflatable packers set at depth and injecting between them must be evaluated in the field.

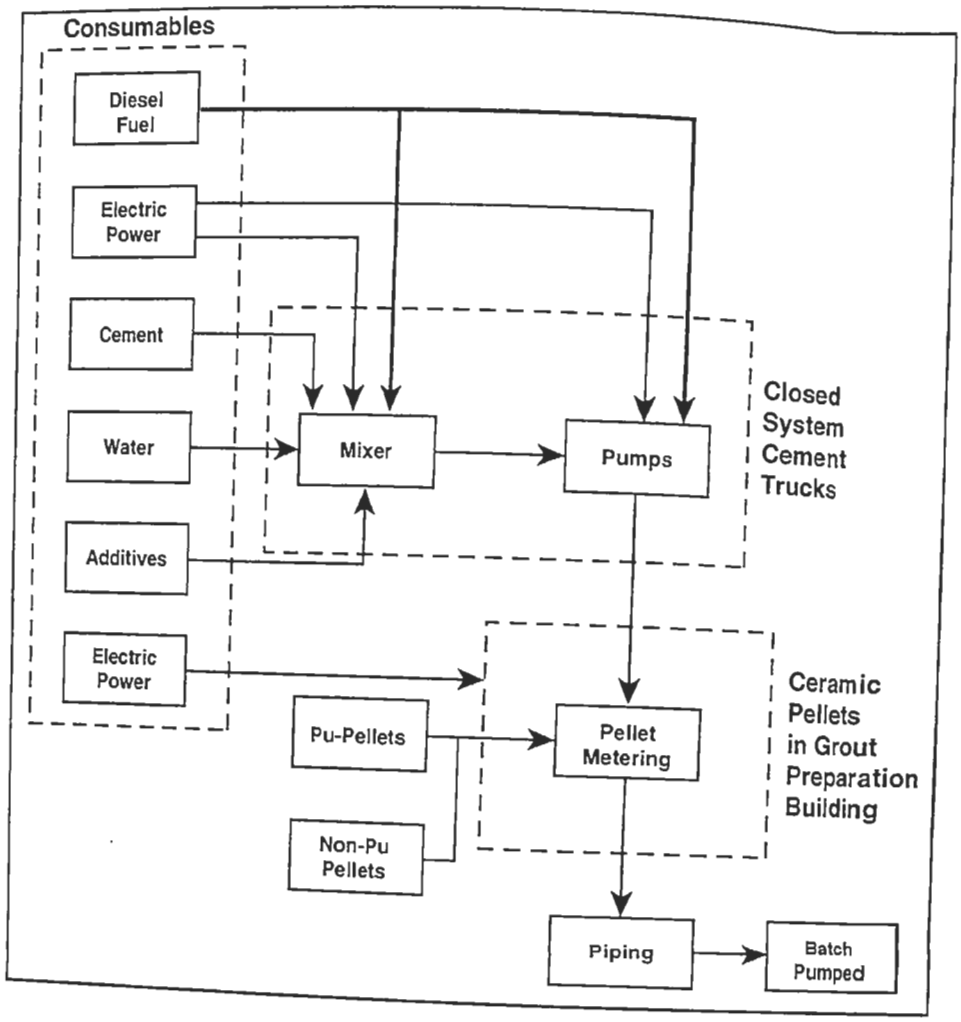

Figure 4.3.1-1. Pellet–Grout Mix Emplacement Process Flow Diagram.

The cementing trucks mix and deliver the grout slurry to the ceramic pellet–grout mix preparation building. The pellets are metered into the grout and further mixed prior to emplacement in the borehole by the bucket or pipe delivery methods. Two processes are being considered for the delivery of the ceramic pellet–grout mix to the emplacement depth of the borehole: (1) emplacement by bucket and hoist and (2) emplacement by pumping the pellet–grout mix down a delivery pipe. These two processes and the associated equipment are described below.

The Bucket Emplacement Process

The bucket emplacement process consists of filling a 0.41-m (16-in.) outside diameter × 152-m-long (500-ft) pipe "bucket" with the pellet–grout mix at the surface, delivering the load to the emplacement depth within the borehole, and releasing it at a controlled rate while withdrawing the bucket upwards. Figure 4.3.1-2 shows the manner in which the bucket is filled with the pellet–grout mix at the top of the borehole. Figure 4.3.1-3 shows the bucket delivering its pellet–grout load at the emplacement depth.

The bucket is made up of 6.1-m-long (20-ft) casing-like sections of pipe that are threaded together section-by-section to a full length of 152 m (500 ft) while being held within the borehole at the entrance to the borehole. The bucket is lowered to emplacement depth using a pipe string and a crane hoist. A transition section exists at the top of the bucket to allow connection of the bucket to the pipe string. The bucket has a remotely controlled release valve at its bottom for releasing the pellet–grout mix at the emplacement location. A column of water and/or air pressure will be used to eject the slurry from the bucket. A piston-like wiper, which will be retained inside of the bucket, will be employed to prevent the column of water from mixing with the cement. The bucket will need to be checked for contamination due to pellet breakage and may be decontaminated before reuse.

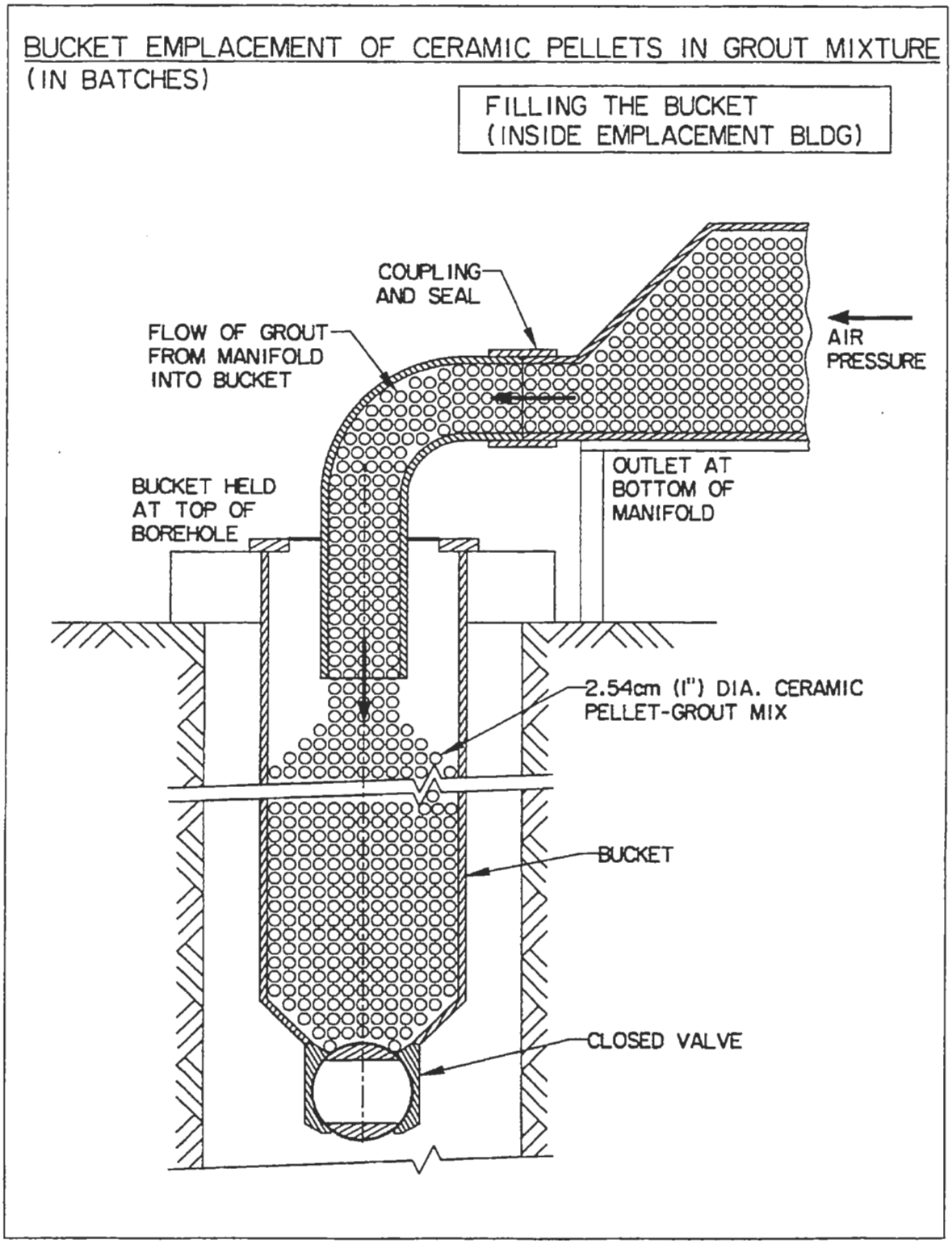

Figure 4.3.1-2. Bucket Emplacement Method—Bucket Filling Process.

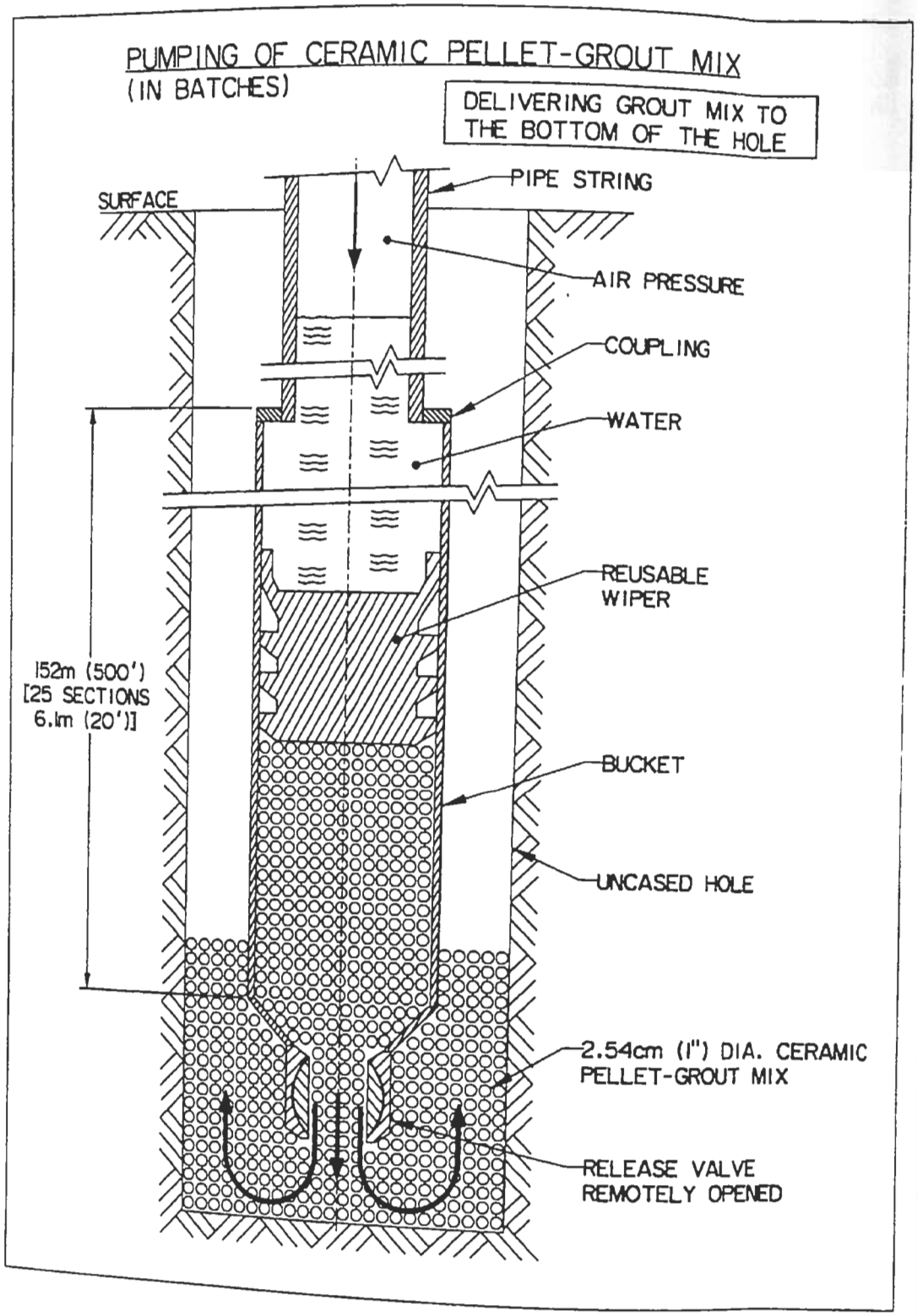

Figure 4.3.1-3. Bucket Emplacement Method—Delivery Process.

The bucket receives its pellet–grout load from the mixer located within the containment building. The mixer, which has a rotating type concrete mixer section, mixes the slurry to reduce voids and air pockets between the pellets. The mix is poured into a hopper and is subsequently driven under air pressure into the bucket through an articulated delivery pipe in batches. Only a 6.1-m (20-ft) section of the bucket will be filled at one time to minimize the likelihood of damaging the pellets as they enter the bucket. The delivery pipe will be raised as the bucket is filled to facilitate the process.

It is estimated that a completely filled bucket would be about 113,400 kg. The time required to lower the bucket to a 4-km depth will be about 8 hr, which requires the use of appropriate chemical additives to prevent setting of the grout within the bucket. Halliburton Services of Duncan, OK, a major supplier of oil well cements and equipment, can produce a blend of additives and grout that will have the required delay in setup time. During emplacement by the bucket method, the emplacement facility would have to operate in 12-hr shifts. It is expected that this would be necessary about once per month, or a total of 120 times, during the ten-year operational period of the Facility.

This emplacement method will adopt operational procedures similar to those used by LLNL during nuclear device emplacement operations at the Nevada Test Site in which canisters are lowered into boreholes on well-casing pipe strings. The process involves the use of a crane, a subbase, and casing pipe. When the crane is not supporting the emplacement string, the subbase structure supports the load. A heavy lift subbase exists in the DOE inventory with a rated capacity of 635,000 kg of load. The subbase is a custom-built welded steel structure [6.1 m × 15.2 m × 6.1 m tall (20 ft × 50 ft × 20 ft)] designed for emplacement operations in underground nuclear testing. Nuclear Explosive Safety rules in DOE 5610.11 govern the operations associated with the emplacement of a nuclear devices in borehole for testing. These safety rules also provide an excellent basis for establishing safety factors, specifying equipment requirements, and controlling operations associated with bucket emplacement of the Pu-loaded ceramic pellet–grout mix within boreholes.

Pumped Emplacement Process

The pumped emplacement method provides an alternative to the bucket emplacement of the ceramic pellet–grout mix. In this method batches of ceramic pellet–grout mix are pumped down a 15.2-cm-diam (6-in.) delivery pipe under water and/or air pressure, as indicated in Figure 4.3.1-4. This technique is preferred to directly pumping the pellet–grout mix using a conventional concrete pump to avoid breaking pellets during pumping. The batch of slurry will be in the form of a slug of finite length pushed from behind by a piston-like ceramic wiper at its trailing edge and prevented from breaking up at its leading edge by a similar ceramic wiper. The primary function of the wipers is to prevent breakup of the slug into small sections and falling down the delivery pipe and to provide a stable surface for the driving pressure to act on. The mix will be pushed out of the mixer and into the pipe using the water and/or air pressure, and the ceramic wipers will be introduced ahead of and behind the slug at the outlet port of the mixer. The mixing of the slurry and the delivery into the pipe will be performed within the containment building, which will completely cover the entrance to the borehole. A remotely controlled release valve at the bottom of the delivery pipe at emplacement depth will be used to control the rate at which the slug moves down the borehole and ejects out into the borehole. The ceramic wipers will be allowed to eject into the borehole and will be emplaced with the pellet–grout mix as shown in Figure 4.3.1-5. The wipers will be made with ceramic material similar to that of the pellets so as to maintain the chemistry in the emplacement zone unaltered and to ensure compatibility with the emplaced material. As it is released into the borehole, the pellet–grout mix will be compacted using a vibratory compactor attached to the bottom of the bucket, below the release valve. This is shown in Figure 4.3.1-6. The length of each slug that is pumped will be adjusted to fit the optimal batch size although it is possible to simultaneously move several slugs down the delivery pipe. Currently, the batch size is assumed to be 10 t of 1% Pu-loaded ceramic pellets (i.e., 100 kg of Pu) mixed with 10 t of non-Pu-loaded ceramic pellets and 6.8 t of grout. This represents a total ceramic pellet–grout mix volume of 8.46 m^3 and a slug length of 464 m within the 15.2-cm-diam (6-in.) delivery pipe. At this slug length, 125 slugs would be required to emplace 12.5 t of Pu in the emplacement zone of one borehole.

In this delivery method, it is possible to isolate the gases in emplacement section of the borehole by using two inflatable packers mounted on two independently movable concentric pipes as shown in Figure 4.3.1-4. This isolates any emissions from broken Pu-loaded pellets from the upper regions of the borehole that may be in communication with the biosphere. The lower packer is mounted on the delivery pipe while the upper packer is mounted on a larger pipe that is concentric with the delivery pipe. By alternately deflating, inflating, and moving these two packers, as indicated in the ceramic pellet–grout mix delivery and relocation cycle shown in Figure 4.3.1-5, it is possible to "walk" the outlet section of the delivery pipe up the borehole without exposing the upper region of the borehole to contamination. During delivery, the delivery pipe is raised in small steps by the crane. The air displaced

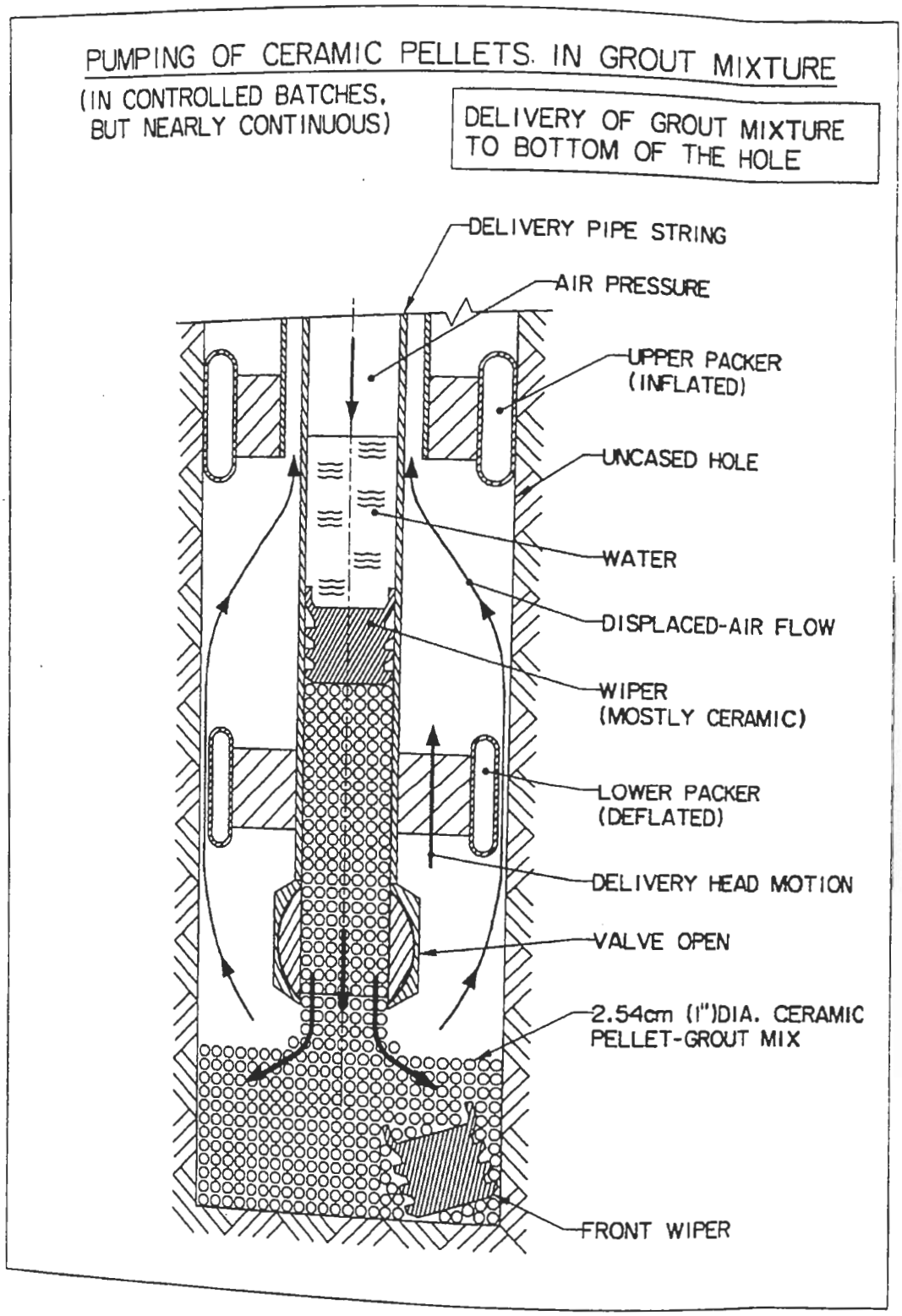

Figure 4.3.1-4. Pumped Emplacement Method—Delivery Process.

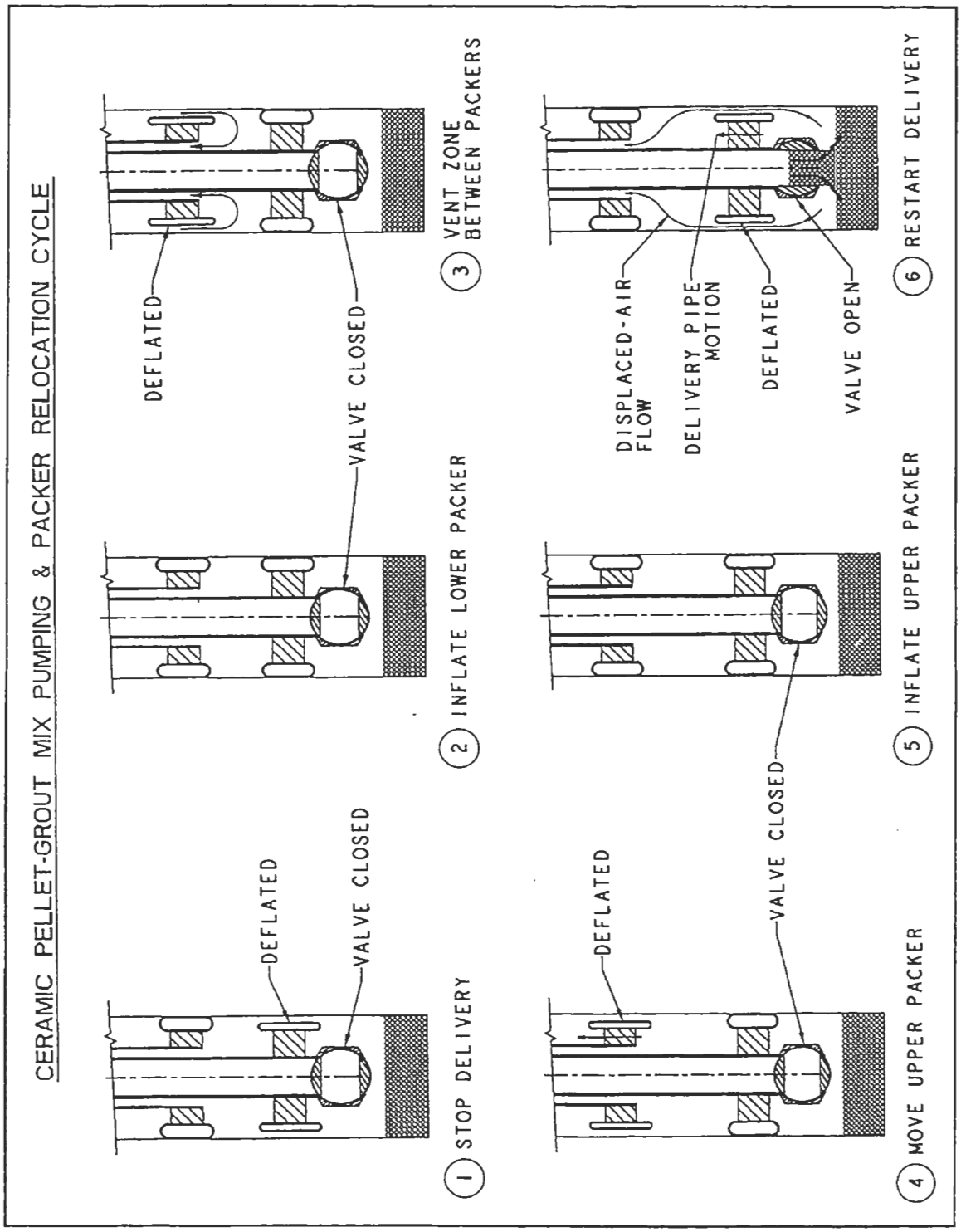

Figure 4.3.1-5. Pumped Emplacement Method—Delivery and Packer Relocation Cycle.

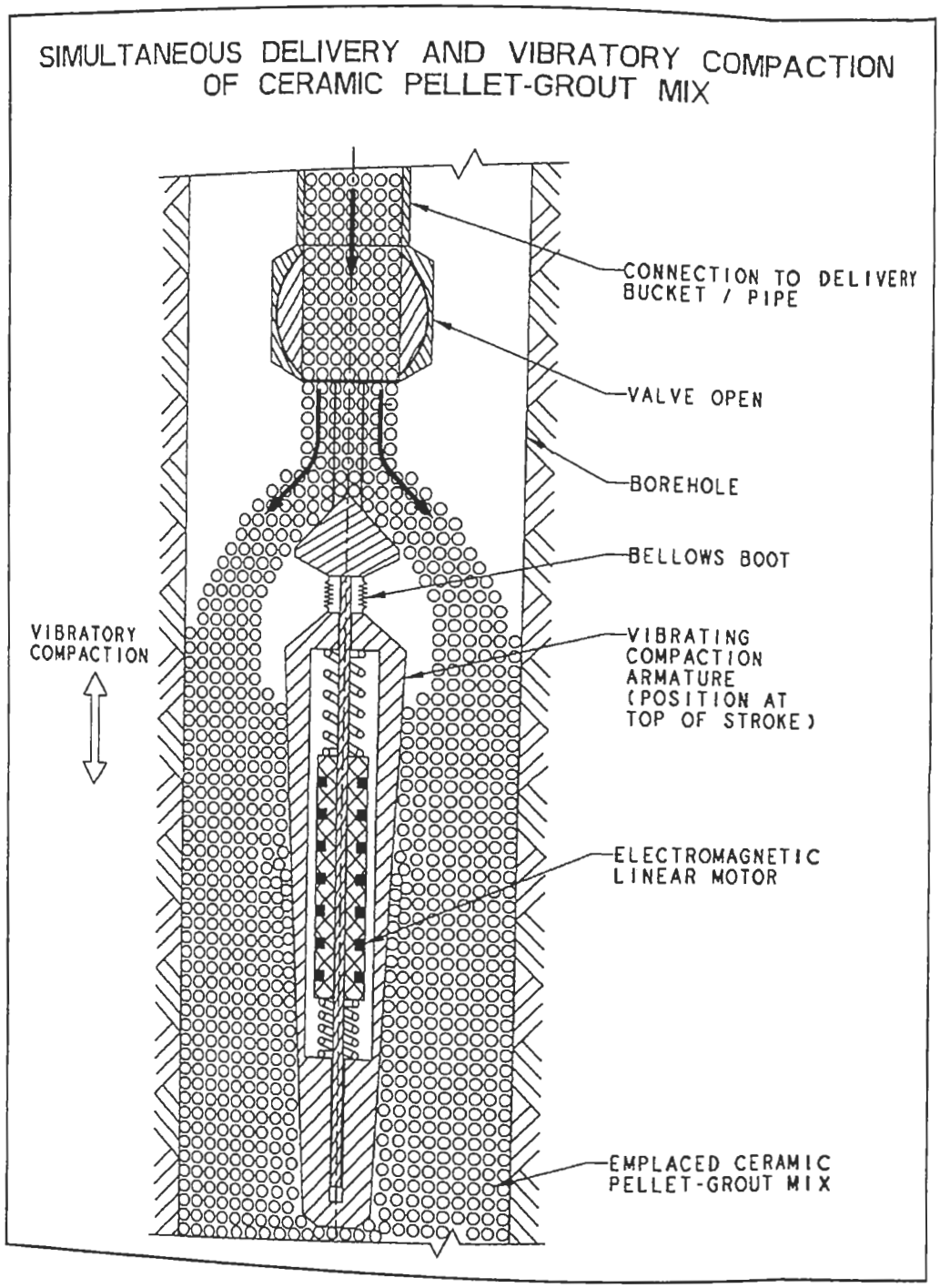

Figure 4.3.1-6. Pumped Emplacement Method—Vibratory Compaction of Mix.

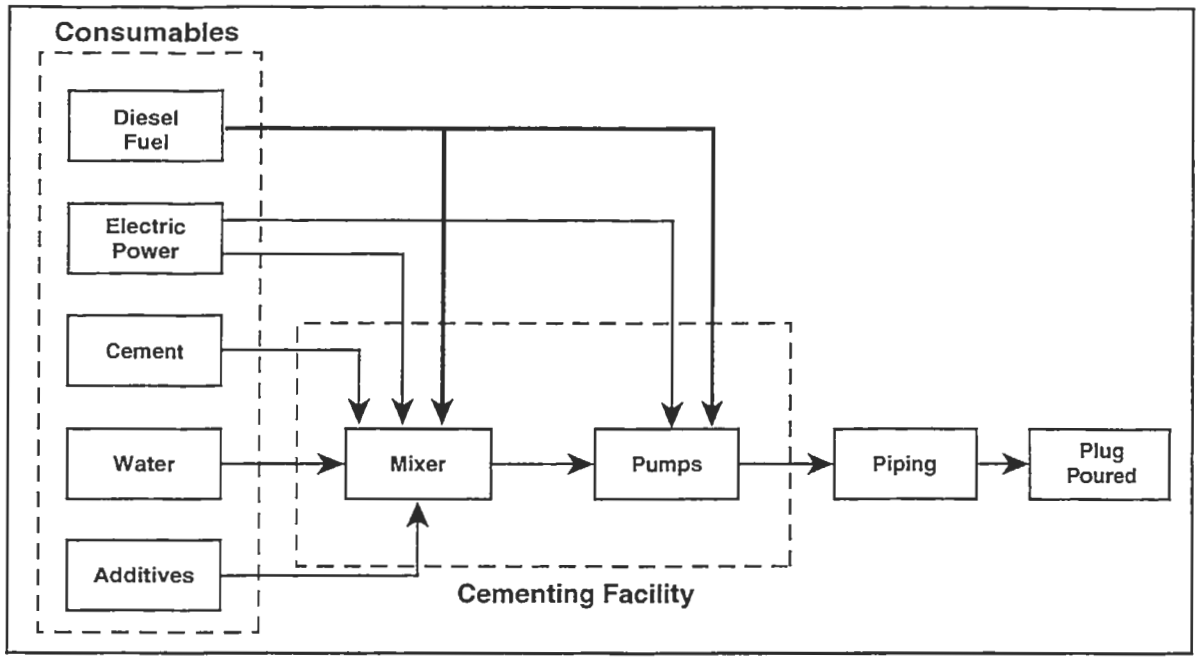

Figure 4.3.1-7. Cementing/Sealing Process Flow Diagram.

by emplacement and the pumped-out vent air flows through the annulus between the two pipes to the surface and is filtered by two-stage HEPA filters within the containment building prior to release to the atmosphere. The packers minimize the potential for radioactive material contamination of the open isolation zone and the containment building and supplement isolation provided by the containment building. However, all workers entering the containment building will be required to wear SCBA systems and protective suits. When emplacement is completed, the removed sections of delivery pipe will be checked for radioactivity and decontaminated as needed.

This method of delivering the pellet–grout mix to the emplacement zone does not require a very large crane, grouts with long setting times, the handling of a large, heavy bucket with the attendant safety risks, and the very long trip times that make bucket emplacement a slow process. It is a very simple technique that strongly resembles cementing jobs in the oil and gas industry. However, pumped delivery does not offer the degree of positive control over the pellet emplacement provided by the bucket delivery method.

The equipment in the Ceramic Pellet–Grout Mix Preparation Building will require periodic decontamination. Potentially contaminated water, cement, and equipment from the Ceramic Pellet–Grout Mix Preparation Facility will be sent to the Process Waste Management Building in the Emplacing–Borehole Sealing Facility.

The casing, cementing, and borehole sealing process flow diagram is given in Figure 4.3.1-7. Periodically, when one or more batches have been pumped, a hydraulic and transport seal, manufactured from special materials, is installed. When the entire 2-km emplacement zone is filled in this way, a long hydraulic and transport seal is installed at the top of the emplacement zone. Next the borehole is filled with concrete with periodic hydraulic and transport seals, and a dual-purpose security and anti-water infiltration cap is installed at the entrance to the borehole at ground level.

4.3.2 Feeds

Pu-loaded ceramic pellets and the non-Pu-loaded ceramic pellets, approximately 2.54 cm (1 in.) in diameter, are the primary feeds to the Emplacing–Borehole Sealing Process. The Pu-loaded ceramic pellets are delivered in transportation containers and are inspected and stored in the Receiving and Processing Building. In addition, a feed stream of cement and additives will be required for installing the plugs/seals. The exact makeup of these cement mixtures will be determined to satisfy the performance requirements for the cement in the borehole environment.

4.3.3 Products

There are no products in this operation. Wastes generated by the process are identified in Section 4.3.7.

4.3.4 Utilities Required

Process water, compressed air, and electrical power facilities would be supplied to the Emplacing–Borehole Sealing Facility for use in the ceramic pellet–granite aggregate grout mix preparation and the sealant preparation.

4.3.5 Chemicals Required

The primary process materials required for the Emplacing–Borehole Sealing process are those required to prepare the emplaced ceramic pellet–grout mix and the borehole sealants. These include chemical additives such as water reducers, superplasticizers, silica fume, fly ash, extenders, and swelling additives. Cement grout and cement additives are mixed with the ceramic pellets to form a ceramic pellet–grout slurry.

4.3.6 Special Requirements

A material control and accountability system with nondestructive assay and computer systems is required for plutonium material control and accountability (MC&A).

4.3.7 Waste Generated

4.3.7.1 Emissions and Effluents

The primary atmospheric emissions produced by this process are the dusts raised by the handling of solid cement, sand, aggregate, silica fume, fly ash etc. during the preparation of the concretes and sealants. In addition, exhausts will be produced from the diesel engines of the power generation sets.

4.3.7.2 Solid and Liquid Wastes

The primary wastes produced by this process are the uncontaminated solid waste cement, sand, aggregates, and decontaminating water. The solid wastes will be disposed of at a landfill.

Contaminated waste water may be generated by equipment cleaning operations and pumping out of excess brine collected within the borehole. The contaminated waste waters will be sampled for radioactivity and brine chemical composition. The sample is first tested for radioactivity from any damaged ceramic pellets and, if not contaminated, is returned to the mud pits. If the water is contaminated, then it is routed to the Process Wastewater Management Facility.

4.4 Waste Management Facility

4.4.1 Waste Management Systems

The waste management of the borehole facili cludes waste handling and treatment operations fo cessing the transuranic (TRU) waste, low-level (LLW), hazardous mixed waste (MW), and industrial in aqueous, organic liquid, or solid form generated the borehole disposition operations or from site activ The waste management is in accordance with DOE 5820.2A and Resource Conservation and Recover (RCRA). Transuranic (TRU) waste generated from hole operations is based on disposal to the Waste Isol Pilot Plant (WIPP) in accordance with WIPP Waste ceptance Criteria. The waste management process diagram is shown in Figure 4.4.1-1.

4.4.1.1 Waste Treatment and Storage Systems

The radioactive wastes are processed in a pro waste handling facility in the Emplacing–Borehole S ing Facility. The waste treatment process includes a examination, sorting, separation, concentration, size duction, special treatment, and thermal treatment. wastes are converted to water meeting effluent stand grouted cement, or compacted solid waste as final products for disposal. Solid TRU wastes are packa assayed, and certified prior to shipping to the WIPP permanent emplacement. Low-level solid wastes are veyed and shipped to a shallow land burial site for posal. A small quantity of solid mixed waste are packa and shipped to a DOE waste treatment facility pendi future processing. The waste treatment processing performs equipment and waste container decontaminat operations.

4.4.1.2 Utility Wastewater Treatment

Utility Waste Treatment treats wastewater generat from utility operations. This wastewater consists of co ing tower blowdown and boiler blowdown. Utility Was water Treatment consists of reverse osmosis followed evaporation and spray drying. Reclaimed water produc is used as makeup to the cooling water tower. A dry res due is disposed of as solid industrial waste.

4.4.1.3 Process Wastewater Management

Process Waste management facility contains equi ment and processes for the treatment of conventio hazardous, radioactive, and mixed liquid wastes. In add tion to the process equipment, ancillary facilities are pr

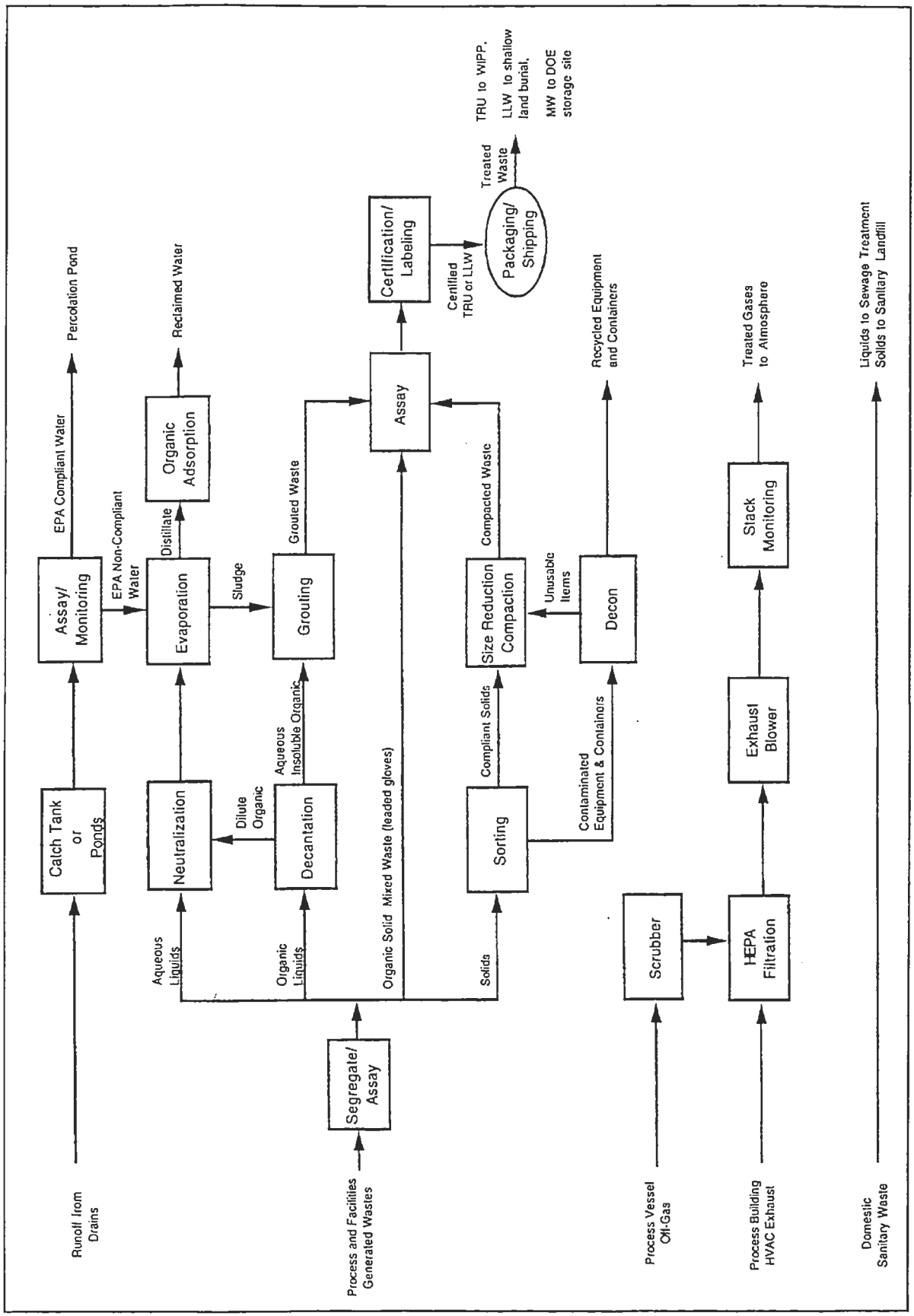

Figure 4.4.1-1. Waste Management Process Flow Diagram.

vided such as the electrical room, control room, process laboratory and changehouse/boundary control station, mechanical (HVAC) room, lunch/break room, and offices. The facilities are designed to the requirements of a moderate-hazard facility, as defined by UCRL-15910 (DOE-STD-1020-92) and DOE order 6430.1A.

Process Waste Management treats wastewater that is generated by the Surface Processing Facility and Pellet–Grout Mix Preparation Sub-Facility processes as well as the Emplacing–Borehole Sealing Facility processes. Wastewater originating in the borehole array area is pumped through underground pipes to the Process Waste Treatment facility. Such wastewater is expected to primarily consist of mopwaters and cleaning solutions, sealants and additives, drilling mud additives, grout additives, and machine coolant wastes.

A substantial amount of wastewater will be generated by the drilling facility as overflow water from drilling mud settlement ponds. Also, water pumped out from the borehole during drilling, emplacing, and sealing operations requires treatment. Treatment processes are arranged so that cross-contamination of radioactive, hazardous, and conventional wastes will not occur. Provisions will be made to obtain samples of wastewater for analysis prior to treatment.

Support facilities include a chemicals storage room and mixing area located outside any radiation control areas. A control room, laboratory, offices, lunch/break room, lavatories, electrical service room, and mechanical service room will be provided. Boundary controls must be implemented, as needed, to isolate activities that take place in radiation control zones.

Effluent from Process Waste Treatment is designated as reclaimed water recycle and is used as makeup water to the cooling tower.

4.4.1.4 Sanitary Wastewater Treatment

Sanitary Waste Treatment is designed to handle 37,850 L/day of plant sanitary sewage and includes the collection piping system from all plant facilities. Hazardous chemicals, process waters, and contaminated streams will be kept out of the system. Wastewater from wash stations is collected in tanks and sampled for contamination before release to Sanitary Waste Treatment. If any streams are found to be contaminated, the wastewater is discharged to Process Wastewater Treatment. The treated wastewater effluent from Sanitary Waste Treatment is designated as reclaimed water recycle and is used as makeup water to the cooling tower. Sludge generated by Sanitary W water Treatment is dewatered and shipped to an on sanitary/industrial landfill. The treatment system con of primary, secondary, and tertiary treatment with di fectant. Necessary controls will be implemented so radionuclides will not be present in sanitary wastewa

4.4.1.5 Waste Heat Management

Waste heat generated from process water cooling HVAC chiller systems is dissipated to environment b cooling tower system located in the Support Utilities A

4.4.1.6 Storm Water Management

Storm Water Management impounds all storm wa runoff from the facility and includes retention facilit and monitoring equipment. Discharged water can be us as cooling tower makeup or discharged to natural dra age. If the storm water were to become contaminated, t storm water would be treated before discharge.

4.4.2 Waste Management Feeds

Radioactive contaminated feeds arise from cleani of incoming ceramic pellet containers, process wash li uids, and excess water being output from the boreho Additional contaminated and uncontaminated waste pr cess feeds arise from sealant residues, contaminated r agent containers, deformed shipping containers, wipe rags, paper clothing, TCA cleaning solvent, and spent pum oils are solid and liquid feeds. Feeds from drilling includ briny water and solid rock cuttings. Feeds from emplace ment and borehole sealing include unconsumed solid wast cement, sand, and aggregates that contain chemicals use with concrete and sealants, and possibly contaminate wastewater.

4.4.3 Waste Management Function Products

Waste management function products may include certified TRU or LLW or MW. Domestic sanitary waste will be processed into liquids for sewage treatment and solids for sanitary landfills.

4.4.4 Waste Management Functon Special Requirements

The waste treatment processes requires decontaminating solutions for the decontamination process. An estimated 7,030 kg of decontaminating detergent will be required.

5. RESOURCE NEEDS

5.1 Materials/Resources Consumed During Operation

5.1.1 Utilities Consumed

5.1.1.1 Surface Processing Facility

The estimated annual utility requirements for operation of the Surface Processing Facilities are shown in Table 5.1.1.1-1.

5.1.1.2 Drilling and Emplacing–Borehole Sealing

The utilities required by the drilling, emplacement–sealing operations are summarized in Table 5.1.1.2-1. The values represent the average annual expected consumption.

5.1.2 Water Balance

The raw water requirement for the Deep Borehole Disposal Facility is about 138 million liters per year (Dry Site), of which 87.1 million liters is consumed by the main facility area and 50.7 million liters per year is consumed by the Drilling and Emplacing–Borehole Sealing Facilities in the borehole array area. The Raw Water Subsystem includes production wells, supply pumps, and transfer piping to the Facility Water Subsystem. Figure 5.1.2-1 shows the Annual Water Balance (Dry Site) for the Facility. There will be no significant difference in the raw water requirement between dry and wet sites. The main difference between dry and wet sites on the water supply system will be will be (1) the source of raw water will be a river or lake for a wet site and water wells for a dry site, (2) the storm water impounding ponds and drains will be smaller

Table 5.1.1.1-1. Utilities Consumed by the Surface Processing Facility During the Operation Period.

Utility	Annual Average Consumption	Peak Demand(1)
Electricity	5,800 MWh	2 MW
Diesel Fuel	16,280 L	N/A
Natural Gas	4,810,000 m^3 (2)	N/A
Raw Water (Dry Site)	87,100,000 L	N/A
Raw Water (Wet Site)	87,100,000 L	N/A

(1) Peak demand is the maximum rate expected during any hour.

(2) Standard cubic meters measured at 1.034 kg/cm^2 (14.7 psia) and 15.6°C (60°F).

Table 5.1.1.2-1. Utilities Consumed by the Drilling and Emplacing-Borehole Sealing Facilities During the Operation Period.

Utility	Annual Average Consumption	Peak Demand(1)
Electricity	300 MWh	0.3 MW
Gasoline and Diesel Fuel	757,000 L	750 L
Natural Gas	0 m^3 (2)	N/A
Raw Water (Dry Site)	50,700,000 L	N/A
Raw Water (Wet Site)	50,700,000 L	N/A

(1) Peak demand is the maximum rate expected during any hour.

(2) Standard cubic meters measured at 1.034 kg/cm^2 (14.7 psia) and 15.6°C (60°F).

Table 5.1.3.1-1. Annual Chemicals or Materials Consumed by the Surface Processing Facility During Operation.

Nonradiological Material	Quantity
Solids	
Filler Ceramic Pellets	500 t
Cement	210 t
Cement Additives	10 t
Decon detergent	5,440 kg
Non-ionic polymer (water treatment)	136 kg
Phosphates/Phosphonates (water treatment)	907 kg
Liquids	
Deionized Water (for ceramic pellet–grout mix)	94,630 L
Gases	
Nitrogen gas	500 cylinders

for a dry site, (3) the evaporation and groundwater seepage losses from retention ponds will be higher for a dry site, and (4) the cooling water tower system will have to be larger for a dry site.

5.1.3 Chemicals Consumed

5.1.3.1 Surface Processing Facility

The estimated annual material consumptions during the operation period of the Surface Processing Facilities are listed in Table 5.1.3.1-1.

5.1.3.2 Drilling and Emplacing–Borehole Sealing

The materials required for the drilling and emplacement–sealing operations is listed in Table 5.1.3.2-1. The table lists the requirements for the entire project, not annual usage. The steel will be used for the borehole casing. The bentonite will be used in the cements and in the drilling fluids. The sodium citrate and silica flour will be used in the cement mixes. The polymers will be used in the drilling mud and the cement mixes. Some of the polymers and bentonite will become waste from the drilling process. The water will be used for drilling fluid (mud) and for producing the cements. The air will be used by compressors for the drilling process.

5.1.4 Radiological Materials Required

There are no radioactive material requirements e cept the 50 t of plutonium in the 5,000 t of 1% Pu-load ceramic pellet feed material over the 10-yr period of o eration of the Deep Borehole Disposal Facility.

5.2 Materials/Resources Consumed During Construction

5.2.1 Utilities

The estimated total energy resources and water co sumption requirements during construction of the bor hole surface facilities are shown in Table 5.2.1-1.

5.2.2 Nonradiological Materials

The estimated quantity of materials required for co struction of the borehole surface facilities is shown in Tab 5.2.2-1.

5.2.3 Land use

The Deep Borehole Disposal Facility requires approx mately 4 hectares (10 acres) of land for construction la down and warehousing and 2.4 hectares (6 acres) for co struction parking.

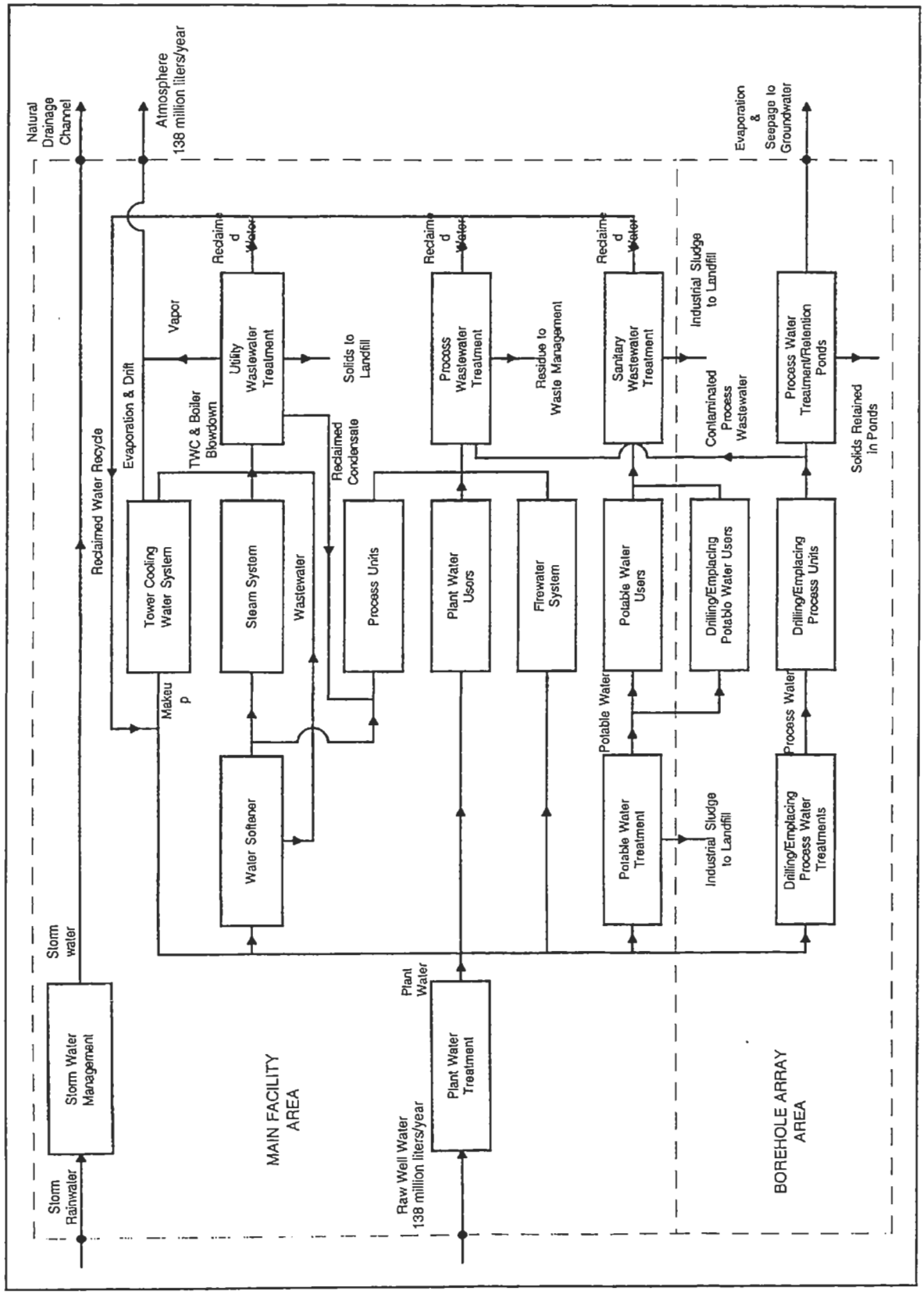

Figure 5.1.2-1. Deep Borehole Disposal Facility Water Balance (Dry Site).

Table 5.1.3.2-1. Nonradiological Materials Consumed by the Drilling and Emplacing-Borehole Sealing Facility During the Operation Period.

Nonradiological Material	Quantity
Solids	
API Class D, G, and F Cements	34,000,000 kg
Steel (Casing)	9,070,000 kg
Bentonite	907,000 kg
Sodium Citrate	340,000 kg
Silica Flour	340,000 kg
Polymers	340,000 kg
Liquids	
Water (for mud and cement, included in raw water total in Table 5.1.1.2-1)	41,600,000 L
Decon Detergent	7,030 kg

Table 5.2.1-1. Utilities Consumed During the Construction Period.

Utility	Total Consumption	Peak Demand(1)
Electricity	1,700 MWh	0.8 MW
Diesel Fuel	3,407,000 L	N/A
Gasoline	2,271,000 L	N/A
Propane	340,700 L	N/A
Raw Water	41,630,000 L	N/A

(1) Peak demand is the maximum rate expected during any hour.

Table 5.2.2-1. Materials Consumed During the Construction Period.

Material	Total Quantity
Concrete	25,000 m^3
Steel	5,800 t
Copper	85 t
Lumber	1,400 m^3
Asphalt	3,700 t

6. EMPLOYMENT NEEDS

Manpower and staffing requirements for construction and operation of the Deep Borehole Disposal Facility are estimated in the following subsections.

6.1 Employment Needs During Operation

The estimated staffing requirements for operation of the Deep Borehole Disposal Facility are shown in Table 6.1-1. A 10-yr emplacement operation is assumed.

6.2 Badged Employees at Risk of Radiological Exposure

Approximately 60% of the personnel listed in Table 6.1-1 would routinely work inside the radiological area to operate and maintain the Deep Borehole Disposal Facility. Accordingly, 60% of facility personnel would be classified as "radiological occupational workers" at risk for radiological exposure. The radiological impact on average workers attributed to the disposal operation is less than 13 mrem/yr, based on a previous borehole nuclear waste disposal study.

6.3 Employment Needs During Construction

Table 6.3-1 gives the estimated field labor force schedule for construction of the Deep Borehole Disposal Facility. A 3-yr construction schedule is assumed.

Table 6.1-1. Employment During Operation.

Labor Category	Number of Employees
Officials and Managers	21
Professionals	31
Technicians	55
Office and Clerical	4
Craft Workers	42
Operators	85
Laborers	2
Service Workers	40
TOTAL EMPLOYEES	**280**

Table 6.3-1. Number of Construction Employees Needed by Year.

Employees	Year 1	Year 2	Year 3
Total Craft Workers	260	723	405
Construction Management and Support Staff	30	85	45
Total Employees	**290**	**810**	**450**

7. WASTES AND EMISSIONS FROM THE DEEP BOREHOLE DISPOSAL FACILITY

Wastes and emissions as described in the PEIS may not correlate exactly to those in this report because of differing categorizations.

7.1 Wastes and Emissions During Operation

The annual wastes and emissions released during operation of the Deep Borehole Disposal Facility are estimated in the following subsections. A 10-yr emplacement operation schedule is assumed.

7.1.1 Emissions

Estimated annual quantities of air pollutant emissions from operation of the Deep Borehole Disposal Facility are shown in Tables 7.1.1-1 and 7.1.1-2. The emissions are based on the annual fuel and gas consumption estimated in Tables 5.1.1.1-1 and 5.1.1.1-2.

Chemical processes that may lead to the release of contaminant over time are unlikely in the abbreviated times associated with unloading of Pu-loaded ceramic pellets,

Table 7.1.1-1. Chemical Emissions Generated by the Surface Processing Facility During the Operation Period.

Chemical	Annual Emissions (kg)
Criteria Pollutants	
Sulfur Oxides	77
Nitrogen Oxides	953
Particulates	8,620
CO	345
Hydrocarbons	86
Other Chemicals	
Volatile Organic Compounds	trace
Water Vapor (cooling tower)	40,824,000

Table 7.1.1-2. Chemical Emissions Generated by the Drilling and Emplacing-Borehole Sealing Facility During the Operation Period.

Chemical	Annual Emissions (kg)
Criteria Pollutants	
Sulfur Oxides	2,720
Nitrogen Oxides	30,390
Particulates	2,720
CO	10,890
Hydrocarbons	2,720
Other Chemicals	
None	

Table 7.1.1-3. Radiological Emissions Generated by the Surface Processing Facility During the Operation Period.

Radioactive Element	Annual Emissions (nCi)
Atmospheric Emissions	
Pu total	1.5
Other Actinides (Am-241)	0.3
Liquid Effluents	
Pu total	2.5
Other Actinides (Am-241)	5

ceramic pellet–grout mix manufacture; emplacement; and backfill and stemming barrier processes. Wet air produced from the borehole during emplacement operation will be filtered, scrubbed, and vented to the atmosphere. The scrub water will first be treated to precipitate radioactive material and will then be released to the environment. The precipitate will be collected and will be disposed of as LLW at an off-site facility.

Estimated radiological release to environment during operation of the Deep Borehole Disposal Facility is shown in Table 7.1.1-3. The estimated release is based on the total curie inventory of radionuclides stored and processed annually in the Deep Borehole Disposal Facility with the radioactivity release factor from a previous design rep (DOE/ET-0028) for plutonium storage facility, which h very similar operational characteristics to the Deep Bor hole Disposal Facility.

7.1.2 Solid and Liquid Wastes

The type and quantity of solid and liquid wastes e pected to be generated from operation of the Deep Bor hole Disposal Facility and the final waste products aft treatment are shown in Tables 7.1.2-1 and 7.1.2-2. Th waste generations are based on factors from historic da on building size, utility requirements, and facility wo force estimated in Table 6.1-1.

Table 7.1.2-1. Annual Spent Fuel and Waste Volumes During Operation of Surface Facilities.

Category	Generated Quantities		Post-Treated	
	Solid (m^3)	Liquid (L)	Solid (m^3)	Liquid (L)
Spent Fuel	0	0	0	0
High-Level Waste (HLW)	0	0	0	0
Transuranic Waste (TRU)	0.46	454	0.46	0
Low-Level Waste (LLW)	6.1	3,030	5.0	0
Mixed Transuranic Waste	0.12	0	0.12	0
Mixed Low-Level Waste	0	0	0	0
Hazardous Waste	14.5	2,270	14.5	2,270
Nonhazardous (Sanitary) Wastes				
Dry Site	291	9,463,000	291	9,463,000
Wet Site	291	9,463,000	291	9,463,000
Nonhazardous (Other) Wastes				
Dry Site	0	6,060,000	0	6,060,000
Wet Site	0	6,060,000	0	6,060,000
Recyclable Wastes	0	0	0	0

Table 7.1.2-2. Solid and Liquid Wastes Generated by the Drilling and Emplacing-Borehole Sealing Facilities During the Operation Period.

Category	Annual Quantities	
	Solid	Liquid
Hazardous Wastes		
Decon Water		69,600 L
Oil/Antifreeze/Hydraulics		69,600 L
Rags, etc.	1,090 kg	
Nonhazardous Sanitary Wastes	Section 7.1.2.7	Section 7.1.2.7
Nonhazardous Wastes		
Rock Cuttings from Boreholes	1,220 m^3	
Bentonite	31,750 kg	
Polymers	6,800 kg	

7.1.2.1 High-Level Wastes

There is no high-level radioactive waste generated from operation of the Deep Borehole Disposal Facility.

7.1.2.2 Transuranic Wastes

Transuranic wastes will be generated from process and facility operations, equipment decontamination, failed equipment, and used tools. Transuranic wastes are treated on-site in a waste handling facility to form grout or compact solid waste. Treated transuranic waste products are packaged, assayed, and certified prior to shipping to the Waste Isolation Pilot Plant (WIPP) for disposal.

7.1.2.3 Low-Level Wastes

Low-level wastes generated from operations of the Deep Borehole Disposal Facility are treated with sorting, separation, concentration, and size reduction processes. Final low-level waste products are converted to solid form, surveyed for radioactivity, and shipped to a shallow land burial site for disposal.

7.1.2.4 Mixed Transuranic Wastes

A small quantity of solid mixed waste, mainly rubber gloves and leaded box-gloves in the waste handling facility, will be generated from operation of the Deep Borehole Disposal Facility. The mixed waste is packaged and shipped to another DOE waste management facility (e.g., INEL at Idaho) for temporary storage pending final treatment and disposal.

7.1.2.5 Mixed Low-Level Wastes

Mixed wastes generated from the Deep Borehole Disposal Facility with radioactivity level below transuranic level (100 nCi/g) will be classified as mixed low-level wastes and will be treated in the same manner as the mixed transuranic wastes described in Section 7.1.2.4.

7.1.2.6 Hazardous Wastes

Hazardous wastes will be generated from chemical makeup and reagents for support activities and lubricant for drilling and emplacement machinery. Hazardous wastes will be managed and hauled to commercial waste facility offsite for treatment and disposal according to EPA RCRA guidelines.

7.1.2.7 Nonhazardous (Sanitary) Wastes

Non-hazardous sanitary liquid wastes generated in the Deep Borehole Disposal Facility are transferred to an on-site sanitary waste system for treatment. Non-hazardous solid wastes, such as domestic trash and office waste, are hauled to offsite municipal sanitary landfill for disposal.

7.1.2.8 Nonhazardous (Other) Wastes

Other nonhazardous liquid wastes generated from facilities support operations (e.g., cooling tower and evaporator condensate) are collected in catch tank and sampled before reclamation for other recycle use or release to the environment.

Table 7.2.1-1. Emissions During the Peak Construction Year.

Chemical	Total Emissions (kg)
Criteria Pollutants	
Sulfur Oxides	7,940
Nitrogen Oxides	97,500
Particulates (dust)	658,000
CO	635,000
Hydrocarbons	7,940
Other Chemicals	
Volatile Organic Compounds	trace

Table 7.2.2-1. Total Solid and Liquid Wastes Generated During Construction.

Waste Category	Quantity
Hazardous Solids	73 m^3
Hazardous Liquids	11,360 L
Nonhazardous Solids	
Concrete	382 m^3
Steel	163 t
Sanitary	918 m^3
Other	84 m^3
Nonhazardous Liquids	
Sanitary	32,170,000 L
Other	5,300,000 L

The combined waste from the drilling, emplacement operations is summarized in Table 7.1.2-2. The waste consists of rock cuttings, bentonite, and polymers used during drilling. These wastes will all end up in the mud pits. It is customary within the drilling industry to leave all of these wastes in the mud pits rather than ship them off site. After drilling is complete, the pits are generally filled up with earth and leveled. There is expected to be no treatment of these wastes unless testing indicates otherwise. The rock cuttings are shown in the table only as a volume since the rock will vary in density.

7.2 Wastes and Emissions Generated During Construction

The estimated wastes and emissions generated during construction of the Deep Borehole Disposal Facility are given in the following sections. A 3-yr construction schedule is assumed.

7.2.1 Emissions

Estimated emissions from construction activities of the Deep Borehole Disposal Facility during the peak construction year are shown in Table 7.2.1-1. The emissions are based on the construction land disturbance and vehicle traffic (for dust particulate pollutant) and the fuel and gas consumption (for chemical pollutants) estimated in Tables 5.2.1-1 and 5.2.2-1. The peak construction year is based on a construction schedule as the labor force distribution shown in Table 6.3-1.

7.2.2 Solid and Liquid Wastes

Estimated total quantity of solid and liquid wastes generated from activities associated with construction of the Deep Borehole Disposal Facility is shown in Table 7.2.2-1. The waste generations are based on factors from historic data on construction area size and construction labor force estimated in Table 6.3-1. Solid wastes generated during the construction period are hauled offsite for disposal.

7.2.2.1 Radioactive Wastes

There are no radioactive wastes generated during construction of the Deep Borehole Disposal Facility.

7.2.2.2 Hazardous Wastes

Hazardous wastes generated from construction activities, such as motor oil, lubricant, and drilling fluid from vehicles and drilling machinery, will be managed and hauled to commercial waste facility offsite for treatment and disposal according to EPA RCRA guidelines.

7.2.2.3 Nonhazardous Wastes

Solid nonhazardous wastes generated from construction activities (e.g., construction debris and rock cuttings), are to be disposed of in a sanitary landfill. Liquid nonhazardous wastes are either treated with a portable sanitary treatment system or hauled off-site for treatment and disposal.

8. DESIGN PROCESS FOR ACCIDENT MITIGATION

PURPOSE

The Deep Borehole Disposal Facility for disposing of the excess weapons-usable fissile materials (approximately 50 t) is a Hazard Category 1 facility as defined in DOE-STD-1027-92. As such, it will require a detailed Safety Analysis Report (SAR) and Risk Assessment under DOE Order 5480.23 before the facility is licensed for operation. In the PEIS phase, an accident analysis and risk assessment must be performed to provide a broad evaluation of potential accidents, and the basic design and mitigative features must be incorporated into the facility to reduce the impact of the accidents. This requires a qualitative evaluation of the risk of facility operation to public health and safety, including the magnitude of release of plutonium outside the facility due to the postulated bounding accidents. The frequency or probability of the accidents or events is also estimated qualitatively with a quantitative frequency range assigned to each qualitative frequency class. This approach is an approved methodology that complies with DOE-STD-3009-94, the guidance document for DOE Order 5480.23. This guidance document provides prescriptive methods for hazard analysis and accident analysis for the Safety Analysis Report for facilities of Hazard Categories 1, 2, and 3 based on a graded approach.

According to DOE-STD-3009-94, Chapter 3, a hazard analysis is required to be performed as a prerequisite to a quantitative accident analysis that forms a part of the SAR. This accident analysis is performed to provide guidance for the design of the structures, systems, and components (SSCs) that are classified as Safety Related and/or Safety Significant. The accident analysis is performed at two levels. The first analysis level consists of deterministic analyses for sizing and designing the structures, systems, and components for safe operation. The second analysis level consists of a probabilistic assessment for estimating the overall risk of facility operation to workers and the public. This Probabilistic Risk Assessment (PRA) supplements the deterministic analysis of the first level to provide insight into the hidden vulnerabilities in the design and operation of the facility. The PRA is performed at different levels of detail depending on the regulatory compliance requirements and to support facility life-cycle management decisions. The risk assessment for regulatory compliance is performed to determine the risk posed by facility operation to workers and the public and to ensure that DOE safety goals are met by satisfying the evaluation guidelines of DOE-STD-3005-94 (DRAFT).

SCOPE

The risk assessment must show that the facility will satisfy all appropriate ES&H safety requirements and national and international regulations for each of two operational phases: (1) Pre-Closure Construction, Operating, and Closure Period (assumed to be about 10 yr in duration) and (2) Post-Closure Performance Period, which extends from the time the borehole is sealed and plugged to an indefinite, geologically long time. A full-fledged risk assessment, covering both the Pre-Closure and the Post-Closure phases of facility construction, operation, closure, and post-closure performance, cannot be performed in the current pre–conceptual stage of facility design because of the lack of site characteristics data, detailed facility systems data, the required resources, and time for performing the analyses. Therefore, it is assumed that only a qualitative risk assessment of limited scope will be performed on the basis of the following assumptions and data provided in this report:

1. Risk assessment is limited to the Pre-Closure Phase of the facility and will not address its Post-Closure Phase performance. The Post-Closure phase requires long-term performance analyses that require a program of research to develop the necessary information. Therefore, this analysis is deferred to a future study. The quantitative full-scope risk assessment using system models for the Pre-Closure phase will be performed along with the SAR preparation stage in the development and design of the facility.

2. Bounding accident scenarios are classified into Design Basis Accidents and Beyond Design Basis Accidents.

3. The frequency of each accident scenario will be based on engineering judgment because the design or site characteristics of the facility are not developed well enough to justify use of rigorous risk analysis techniques.

4. Accident frequencies will be assigned qualitative levels of the annual probability of occurrence according to DOE-STD-3009-94:

   Anticipated ($10^{-1} \geq p > 10^{-2}$)
   Unlikely ($10^{-2} \geq p > 10^{-4}$)
   Extremely Unlikely ($10^{-4} \geq p > 10^{-6}$)
   Beyond Extremely Unlikely ($10^{-6} \geq p$).

5. An estimate of the amount of each hazardous material at risk in an accident.

6. An estimate of the fraction of each hazardous material at risk that becomes airborne in respirable form.

7. An estimate of the fraction of each respirable airborne hazardous material in each accident that is removed by the ventilation system filters.

8.1 Operational and Design Basis, and Beyond Design Basis Bounding Accidents

8.1.1 Operational and Design Basis Accidents

In this Section, the different categories of Operational and Design Basis Accidents are first described. Each accident scenario is then defined in sufficient detail to develop the basis for estimating the accident frequency and the release rates for the hazardous materials. The information for these scenarios is summarized in Table 8.1.1.32-1 in Section 8.1.1.32.

The major categories of accidents in this class are defined according to DOE-STD-3009-94, Section 3.4.2:

- *Category 1*: Natural Phenomena Events/Accidents for the site (e.g., earthquakes, wind/tornadoes, floods).
- *Category 2*: External Man-Made Accidents (e.g., aircraft crashes, nearby industrial facility accidents).
- *Category 3*: Internal Operational or Process-Related Accidents (e.g., fires, explosions, spills, criticality events).

These accidents are analyzed to evaluate the capability of the facility structures, systems, and components to limit the risk to the public to within the acceptable limits proposed in the evaluation guidelines.

Category 1: Natural Phenomena Events/ Accidents

Earthquake Hazard

The generic site description for the deep borehole facility recommends the selection of a U.S. site in a region of high tectonic and seismic stability (e.g., a site where there are no recorded earthquakes with a Mercalli intensity of over V). Using this guideline, the site is likely to be chosen in the Seismic Zone 1 according to the Uniform Building Code (UBC). This zone has a maximum acceleration of 0.075 g (See Figure 23-2 of UBC-1991). The design of the facility structures, systems, and components will be based on this acceleration level for the Design Basis Earthquake (DBE) and will follow the design criteria of DOE-STD-1020-94 for Performance Category PC-3 (see definition in DOE order 5480-28). From Table 2-1 of DOE-STD-1020-94, for Performance Category PC-3, the seismic hazard exceedance level is 5×10^{-4} with a return period of 2,000 yr for sites distant from tectonic plate boundaries. The preferred site, as recommended in the generic site description, is in an extremely stable tectonic region distant from tectonic plate boundaries. Therefore, the use of the UBC seismic zone 1 *g* level for the DBE, and design criteria from DOE-STD-1020-94 for design of the SSCs, are justified. The risk due to this earthquake hazard will be negligible. The effect of an earthquake on the surface facilities will be more pronounced than that on the emplacement region of the deep borehole if no active faults are present near the emplacement region. The absence of active faults is an important site selection criterion for the Deep Borehole Disposal Facility.

Wind/Tornado Hazard

The generic site description for the facility location assumes a windy location, with winter blizzards and spring and summer tornadoes. Chapter 3 (p. 3-1) of DOE-STD-1020-94 states that "wind speeds associated with straight winds typically are greater than tornado winds at annual exceedance probabilities greater than approximately 1×10^{-4}." Tornado design criteria are specified only for SSCs in Performance Categories 3 and higher, where hazard exceedance probabilities are less than 1×10^{-2}. In determining wind design criteria for Performance Categories 3 and higher, the first step is to determine if tornadoes should be included in the criteria. The decision can be made on the basis of geographical location, using historical tornado occurrence records. Because the facility design will have to follow DOE-STD-1020-94, Chapter 3 for Wind/Tornado design with appropriate missile criteria for Performance Categories 3 given in Table 3-1 of the standard, it is expected that the consequence due to wind hazard will be insignificant. It is also assumed that adequate administrative control will be established for severe blizzard conditions by a sitewide warning and response plan. Therefore, high wind and blizzard conditions are screened out because the consequences are negligible. Site-specific quantitative probabilistic wind hazard analysis will be performed only when a particular site (instead of a generic site) is selected.

Flood Hazard

The generic site description recommends that, for the elimination of the flood hazard, the site should be selected

to lie above the flood plain of the worst 50 to 100 yr floods in the historical record for the region. According to DOE-STD-1020-94, Chapter 4 (p 4-11) the flood design criteria for SSCs of Performance Category 3 are that "the SSCs in this category should be located above flood levels whose mean annual probability of exceedance is 10^{-4} including the event combinations shown in Table 4-2" of the standard. When the specific site is selected the design criteria established in this standard should be used for the facility design. Therefore, it is assumed that the consequence due to the design basis flood hazard at the facility is negligible.

Category 2: External Man-Made Accidents

External events that originate outside the facility (e.g., aircraft crash, nearby industrial facility accident, etc.) are site specific and are not considered at the pre–conceptual design phase and/or the PEIS preparation phase because no site has been selected. However, as in the case of natural phenomena, the facility SSCs must be designed to withstand the hazards due to the dominant external events such as the ones mentioned above. Therefore, it is assumed in this evaluation that the consequences due to these external events are negligible.

Category 3: Internal Operational or Process-Related Accidents

Accidents in this category are due to process malfunctions, equipment failures, human errors, etc. Accidents in this category are usually unrelated to Category 1 and Category 2 events, but they may be initiated by precursor events belonging to these two categories.

8.1.1.1 Earthquake (Category 1)

The design basis earthquake (DBE) for the Deep Borehole Disposal Facility will be chosen in accordance with DOE-STD-1020-94. Safety class systems, structures, and components (SSCs) are designed to withstand the DBE. Earthquakes exceeding the magnitude of the DBE are "extremely unlikely" accidents as defined in DOE-STD-3009-94. Earthquakes of sufficient magnitude that could cause the failure of safety class SSCs are considered "extremely unlikely" events. Given the safety class items assumed for the deep borehole disposition facility, an earthquake would not directly cause a release of radioactive material nor would it cause a criticality accident. It is postulated, however, that the bounding scenarios in the event of an earthquake would rupture ceramic pellet grouting vessel and lines. The ventilation removes Pu-containing particulate from the grouting area. The particulate pass through a filtration system and are then released to the environment. It is assumed that ceramic pellet contains 0.1% of the pl nium at risk becomes airborne in respirable form. grouting vessel processes an assumed 5 kg of pluton per batch. Therefore, at most 5 kg of Pu are at risk result of the earthquake. This material is released to tilation Zone 2 area. Assuming a two stage HEPA fi system, the fraction of particles released penetrating filter would be 10^{-6}. Therefore 10^{-13} of the plutoniu risk would reach the environment as respirable partic

Mitigation features: The deep borehole disposition fa ity will be sited at a geologic location with low seisn ity. Process equipment will be bolted or tied down to duce earthquake damage. Activity released is remo from the air stream by HEPA filters.

8.1.1.2 Tornado (Category 1)

The design basis tornado (DBT) for the Deep Bo hole Disposal Facility will be chosen in accordance w DOE-STD-1020-94. Safety class systems, structures, components (SSCs) are designed to withstand the D and DBT-generated tornado missiles. Tornadoes exce ing the magnitude of the DBT are "extremely unlike accidents as defined in DOE-STD-3009-94. Tornadoe sufficient energy to cause the failure of safety class SS are considered "extremely unlikely" events. Given th SSCs, it is reasonable to assume that it is "extremely likely" (as defined in DOE-STD-3009-94) that a torn would cause a release of radioactive material at the D Borehole Disposal Facility.

Mitigation features: Tornado dampers will be instal in the pellet–grout mix processing and plutonium stor buildings.

8.1.1.3 Flood (Category 1)

Flooding is of particular concern at plutonium p cessing facilities because of the potential for nuclear cr cality accidents. As described in the generic site descr tion, the Deep Borehole Disposal Facility site will be lected to lie outside the 100 yr flood plain in the regi selected for the facility; this is consistent with the site scription given in Section 3. Furthermore, the Deep Bo hole Disposal Facility will be designed to preclude flo ing of areas that store and process plutonium. Safety cl systems, structures, and components (SSCs) are desig to withstand the DBF. Floods exceeding the magnitude the DBF are extremely unlikely accidents. Given th SSCs, it is reasonable to assume that it is "extremely likely" (as defined in DOE-STD-3009-94) for a flood cause a release of radioactive material or an accide criticality event at the Deep Borehole Disposal Facilit

Mitigation features: The plutonium storage and pellet–grout mix processing buildings will be constructed above flood line to preclude flooding in plutonium storage and process area.

8.1.1.4 Ceramic Pellet Storage Container Breakage (Category 3)

It is postulated that a container breakage could occur in ceramic pellet storage. A ceramic pellet container develops leakage during storage. Respirable fines of ceramic are released to the storage area and are collected by the ventilation system. The airborne fines pass through the ventilation system filters and are released to the environment. A pellet container contains an assumed 5 kg of plutonium. Therefore, at most 5 kg of plutonium is at risk in this scenario. It is assumed that the ceramic pellets contain 0.1% fractured pellets and, based on Walker (1981), 0.01% of the Pu at risk becomes airborne as respirable fines. This release is to the Zone 1 ventilation area. Assuming a three stage HEPA filter system, 10^{-8} of the airborne material will penetrate the filtration system. Therefore, 10^{-15} of the material at risk will reach the environment. This is judged to be an "unlikely" accident.

Mitigation features: Low seal stress is maintained in the storage container to minimize the occurrence of breakage. Ventilation system is isolated and monitored for plutonium contamination. Activity released is removed from the air stream by HEPA filters.

8.1.1.5 Ceramic Pellet Container Breach (Category 3)

It is postulated that a container breach could occur in the ceramic pellet container handling operations. A container is punctured during handling. The ceramic pellets spill from the punctured container. Respirable fines of ceramic are released to the process area and collected by the ventilation system. The airborne fines pass through the ventilation system filters and are released to the environment. A pellet container contains an assumed 5 kg of plutonium. Therefore, at most 5 kg of plutonium is at risk in this scenario. It is assumed that ceramic pellet contains 0.1% fractured pellets and, based on Walker (1981), 0.01% of the fractured ceramic becomes airborne as respirable fines. This release is to the Zone 1 ventilation area. Assuming a three stage HEPA filter system, 10^{-15} of the material at risk will reach the environment. This is judged to be an "unlikely" accident.

Mitigation features: The container will be designed to survive accidents. Administrative procedure controls will be established for extremely careful container handling to reduce the likelihood of this kind of accident. Radioactive materials released are removed from the air stream by HEPA filters.

8.1.1.6 On-Site Pellet Transporter Accident (Category 3)

It is postulated that an accident could occur during the transportation of pellets from the surface storage facility to the pellet–grout mix preparation facility. In this postulated accident, a transport package containing a pellet container is dropped from the transporter. The force of the drop fractures the ceramic pellets and punctures the container but does not rupture the package. A pellet container contains an assumed 5 kg of plutonium. Therefore, at most 5 kg of plutonium are at risk in this scenario. The ceramic fines are contained within the transportation package. There is no release of radioactivity in this scenario. Based on SAND80-1721, the likelihood of a truck accident involving severe impacts is 1.6×10^{-6} per truck kilometer. This is judged to be an "unlikely" accident.

Mitigation features: Shipping package will be designed with double container for transportation accidents.

8.1.1.7 Grouting Process Enclosure Fire (Category 3)

It is postulated that an accident could occur in all surface process operations. The bounding scenarios involve an unimpeded fire that begins in the process area that houses the grouting vessel. The fire breaches a vessel enclosure that contains Pu-loaded ceramic pellets. The ventilation removes plutonium containing particulates from the area. The particulates pass through a filtration system and are then released to the environment. The grouting vessel processes an assumed 5 kg of plutonium per batch. Therefore, at most 5 kg of plutonium is at risk in this scenario. It is assumed that ceramic pellets contain 0.1% fractured pellets and, based on Walker (1981), that 0.01% of the fractured pellets become airborne in respirable form. This material is released to ventilation Zone 2 area. Assuming a two stage HEPA filter system, the fraction of particles released penetrating the filter would be 10^{-6}. Therefore, 10^{-13} of the plutonium at risk would reach the environment as respirable particles. This is judged to be an "extremely unlikely" accident.

Mitigation features: Facility design will include fire suppression system and fire isolation barriers in the process areas. Minimum quantity of combustible material in the process areas will be maintained by administrative controls. Activity released is removed from the air stream by HEPA filters.

8.1.1.8 Ceramic Pellet Feed Bin Spill (Category 3)

It is postulated that a spill could occur in grouting processes at the surface. The bounding scenarios involve a ceramic pellet overflow that spills 0.5 kg of Pu (10% of the assumed vessel contents) onto the floor from a grouting feed bin. The spill spreads out in a safe geometry and is cleaned up within 2 hr. Some of the spilled material becomes airborne as respirable particles. There is little or no entrainment from the spill because of quick corrective action. It is assumed that ceramic pellets contain 0.1% fractured pellets and, based on Walker (1981), no more than 0.01% of the spilled material becomes airborne as a respirable aerosol. This material is released to ventilation Zone 1 area. Assuming a three stage HEPA system, 10^{-8} of the airborne material is released to the environment. Therefore, no more than 1×10^{-15} of the material at risk reaches the environment. This is judged to be an "unlikely" accident.

Mitigation features: Process areas with high potential of spill will be plated with stainless steel for ease of decontamination and leak-proofing. Activity released is removed from the air stream by HEPA filters.

8.1.1.9 Grout Mix Spill (Category 3)

It is postulated that a spill could occur in a grout loading process at the surface. The bounding scenario involves the grouting vessel or bucket overflowing and spilling grout containing 0.5 kg of plutonium (10% of the assumed vessel contents) onto the floor from the vessel or transfer line. The spill spreads out in a safe geometry and the spill is cleaned up within 2 hr. Some of the spilled material converts to an aerosol and becomes airborne as respirable particles. There is little or no entrainment from the spill because of the quick response time. Based on NUREG-1320, approximately 0.0006% of the Pu in spilled grout becomes airborne as a respirable aerosol. This material is released to ventilation Zone 1 area. Assuming a three stage HEPA system, 10^{-8} of the airborne material is released to the environment. Therefore, 6×10^{-14} of the material at risk reaches the environment. This is judged to be an "anticipated" accident.

Mitigation features: Procedural and control interlocks will be implemented to prevent this accident. Floor and wall in the grout mixing process area will be lined with stainless steel for ease of decontamination and leak-proofing. Activity released is removed from the air stream by HEPA filters.

8.1.1.10 Failure of Ventilation Blower (Category 3)

The plutonium process in the deep borehole disposition facility incorporates a redundant ventilation system as required to cope with a loss of ventilation blower. Therefore, a temporary loss of ventilation blower will not directly result in a release of radioactivity. This is judged to be an "anticipated" accident.

Mitigation features: Procedural and control interlocks will be implemented to prevent this accident. The floor and wall in the grout mixing process area will be lined with stainless steel for ease of decontamination and leak proofing. Activity released is removed from the air stream by HEPA filters.

8.1.1.11 Loss of Off-Site Electrical Power (Category 3)

The deep borehole disposition facility incorporates an emergency power source for safety-critical systems as required to cope with a complete loss of off-site power. Therefore, a loss of off-site power will not directly result in a release of radioactivity. This is judged to be an "anticipated" accident.

Mitigation features: Facility will be designed with emergency diesel generators and an uninterruptible power system (UPS) for safety critical system controls and operations.

8.1.1.12 Bucket Emplacement: Dropped Emplacement Bucket (Category 3)

Analysis of the operational procedures indicates that a failure of a mechanical system on the crane or an operator error could cause the bucket to fall to the bottom of the borehole during emplacement. A free fall will be prevented by speed-limiting devices or by methods yet to be designed. The likelihood of this type of accident is deemed to be "extremely unlikely." The severity of the accident is not significant with respect to criticality. However, potentially because a ruptured bucket could release substantial quantities of ceramic pellet dust from damaged (broken or cracked) pellets into the unsealed borehole. The impact is likely to be fairly localized onsite with minimal impacts to offsite areas due to the presence of the containment building over the borehole. The response to the accident could be to cement the ruptured bucket in place at borehole bottom, assuming that the release valve has been damaged, so as to prevent the spread of material from the borehole.

The source Pu at risk in this accident scenario is approximately 834 kg, the total Pu contained in one bucket. It is assumed that as a result of the bucket being dropped that 10% of the pellets will fracture releasing all of the Pu that they contain into their surroundings. The pellets will be wet due to the presence of the cement slurry, which will keep the airborne release to a 6×10^{-6} fraction of the released material. This is based upon data from the *Nuclear Fuel Cycle Facility Accident Analysis Handbook,* NUREG-1320. The respirable fraction is therefore 6×10^{-7}. The containment building covering the borehole during emplacement will further contain the particles. The two stage HEPA filters used by the containment building will provide an additional 10^{-6} reduction in the number of airborne particles released into the atmosphere bringing the final release fraction to 6×10^{-13}. This is judged to be an "anticipated" accident.

8.1.1.13 Bucket Emplacement: Bucket Stuck in Isolation Zone (Category 3)

It is possible for a bucket to become stuck in the borehole during emplacement at a point other than its scheduled location in the emplacement zone. The most likely scenario involves the bucket getting stuck against the borehole wall due to contact with the wall on opposite sides of the borehole. This is more likely to occur where the direction of the borehole changes appreciably. On the other hand, in straight but tilted borehole sections, a bucket will simply slide along one side of the borehole without becoming stuck. In the drilling industry the degree of curving of the borehole is measured in degrees of change in borehole direction per 30.5 m (100 ft) of borehole. The 10-meter horizontal deviation in the KTB borehole at a depth of 4 km provides an indication of the amount of deviation that can be expected when drilling a deep borehole. In addition, at a depth of about 6 km the drillers encountered a hard formation below a softer one that caused the drill bit to deviate from the direction of drilling in the softer formation. Consequently, the path of the borehole spiraled as it penetrated deeper into the hard formation.

If care is taken to drill the first part of the borehole straight, there would be very little deviation of the borehole subsequently. When drilling a straight hole, the load on the drill bit should be relatively low and the speed of the bit should be relatively high. These combine to give straighter hole drilled at a relatively low penetration rate. However, if there are hard sloping rock formations below softer rock formations, there is really not a great deal that can be done to prevent at least some deviation of the borehole. In the judgment of REECO and RSN drilling engineers, a 0.66-m-diameter (26-in.) borehole can be cased without any difficulty with 0.51-m (20-in.) outside diameter casing run in 914-m (3,000-ft) sections. Since the 152-m (500-ft) buckets are much shorter than the above casings, they anticipate no difficulty with buckets becoming stuck in the borehole during emplacement.

After the borehole has been drilled, there are additional measures that can be taken to further reduce the probability that a bucket will become stuck during emplacement. First, hole logs will provide excellent data concerning the shape of the borehole and will indicate regions that contain sharp changes in borehole trajectory. Second, a mandrel or "dummy" bucket can be run into the hole to check for tight spots. This will provide a clear indication of any future problems with the real emplacements. Third, should data from the well logs or the mandrel runs indicate that the buckets may not pass through the borehole properly, an underreaming tool could be used to enlarge the hole. Fourth, the crane operator can closely monitor the load on the crane hook for signs that the bucket is rubbing on the borehole wall and prevent uncontrolled descent of the bucket. All of these precautions will be taken to reduce the possibility of a bucket becoming stuck in the borehole to an extremely low probability.

Given these measures, it is "extremely unlikely" that the bucket will become stuck in the isolation zone. If, however, a bucket were to become completely stuck in the isolation zone, it would have to be broken up and allowed to fall to the bottom of the borehole, or it could be cemented in place if it were deemed to be deep enough to achieve isolation. It is "beyond extremely unlikely" that a bucket would rupture as a result of becoming stuck in the borehole. It is therefore assumed that no release of Pu would occur. The concern is that in the post-closure phase, the disposed material could more easily reach the biosphere. The severity of this is difficult to estimate, and further study is required. With a large void space below the bucket to be filled and sealed, there is an increased probability that small void spaces will remain below the bucket following cementing operations. They would not be expected to be large enough to have any impact on criticality.

8.1.1.14 Bucket Emplacement: Bucket Stuck in Emplacement Zone (Category 3)

As in the isolation zone, a possibility exists for a bucket to become stuck within the emplacement zone of the borehole above the intended pellet–grout mix release depth. From the discussion in Section 8.1.1.13 on the factors that affect the lodging of buckets in the borehole, the likelihood of a bucket becoming stuck is estimated to be "extremely unlikely." As detailed in Section 8.1.1.13 on a bucket becoming stuck in the isolation zone, extensive measures will be taken to ensure that a bucket does not

become stuck in the emplacement zone. The probability of the bucket becoming stuck in the borehole emplacement zone above its intended release location is only marginally greater than the probability of becoming stuck in the isolation zone due to the fact that the casing stops at the top of the emplacement zone. The casing provides added stability to the upper regions of the borehole. If, despite the preventative measures, a bucket were to become completely stuck above the emplacement point, it could be cemented in place as a last resort. In that case no release of Pu would occur. It is "beyond extremely unlikely" that a bucket would rupture as a result of becoming stuck in the borehole. The large void space below the bucket would be filled and sealed.

8.1.1.15 Bucket Emplacement: Failure to Open of Bucket Pellet Release Valve (Category 3)

The valve at the bottom of the bucket acts as the release mechanism allowing the pellets and cement to flow into the borehole after the bucket has reached its release depth. This valve is critical to the emplacement system since a failure to release the pellets may result in a bucket becoming an emplacement canister. By the time the bucket is raised to the top of the borehole, the cement probably will have set up in the bucket. One response is to emplace the bucket and cement around it. The likelihood of the valve failing is probably "extremely unlikely," because such a critical system would be tested often before usage and, in addition, methods would be designed to separate the valve end of the bucket from the main bucket structure. The immediate severity of the accident is nonexistent, because no release of material will occur. There may be some minor long term impacts caused by corrosion products associated with buried parts of the bucket.

8.1.1.16 Bucket Emplacement: Premature Opening of Bucket Pellet Release Valve (Category 3)

If the valve at the bottom of the bucket were to open prematurely, the pellets and cement would free-fall to the bottom of the borehole. This would almost certainly result in broken and fractured ceramic pellets. The response would be to pump cement in on top of the pellets to seal up the borehole. The likelihood of the valve failing is "extremely unlikely" as such a critical system would be tested often before usage. The severity of breakage will be mitigated by the presence of water at the bottom of the borehole due to influx from the surrounding rock. The water will reduce the impact, reduce the level of damage to the pellets, and help to contain any Pu generated by the breakage of pellets. This is further assisted by the fact that the Pu is immobilized in the ceramic matrix of the pellets.

The source Pu at risk in this accident scenario is approximately 834 kg, the total Pu contained in one bucket. It is assumed that as a result of the premature release, 50% of the pellets will fracture, releasing all of the Pu that they contain into their surroundings. They will not have the protection provided by the bucket upon impact. The pellets will be wet due to the presence of the cement slurry, which will keep the airborne release to a 6×10^{-6} fraction of the released material. This is based on data from the *Nuclear Fuel Cycle Facility Accident Analysis Handbook, NUREG-1320.* The respirable fraction is therefore 3×10^{-6}. The containment building covering the borehole during emplacement will further contain the particles. The two stage HEPA filters used by the containment building will provide an additional 10^{-6} reduction in the number of airborne particles released into the atmosphere bringing the final release fraction to 3×10^{-12}.

8.1.1.17 Bucket Emplacement: Pellet–Grout Mix Solidifies in Bucket Before Release (Category 3)

In this scenario, the cement sets up in the bucket before it can be released into the bottom of the borehole. This could be caused by errors in preparing the cement mix, such as the addition of too much retardants or water, that cause a reduction in set time. It is also possible that a significant delay in lowering the bucket to the bottom could cause the cement to set prior to release. The significance of this scenario is the same as that when a stuck release valve fails to open. The corrective response is either to abandon the bucket and cement around it or to design for the bucket to break away from and release the solidified column. The likelihood of occurrence of this accident is "extremely unlikely." The mix formulation will be carefully controlled to prevent the cement from adversely influencing the fluid chemistry in the borehole. If the mix is chosen to provide a very long set time that provides a substantial difference between setup and the time to lower the bucket, operational delays will be unlikely to cause this scenario to occur. The immediate severity of the accident is nonexistent, because no release of material will occur. There may be some minor long term impacts caused by corrosion products associated with the bucket.

8.1.1.18 Bucket Emplacement: Pellet–Grout Mixing System Breaks Pellets (Category 3)

The pellets will have to be mixed with the cement and then pushed under water, air pressure, or gravity into

the bucket. The possibility exists for some of the pellets to break or crack due to unforeseen events in the emplacement process. The surfaces of the pellets will be wetted with cement, helping to limit the amount of the Pu from the pellets that becomes airborne. The contamination is expected to be limited to the mixing system and the bucket used for emplacement. It is "extremely unlikely" that pellets could be damaged since the process will be tested with unloaded pellets to prevent this type of accident.

The source Pu at risk in this accident scenario is approximately 834 kg, the total Pu contained in one bucket. It is assumed that as a result of rough handling during mixing and delivery to the bucket that 1% of the pellets will fracture, releasing all of the Pu they contain into the surroundings. The pellets will be water wet due to the presence of the cement slurry. Based on data from NUREG-1320, this will limit the airborne release to a 6×10^{-6} fraction of the released material. Therefore, the respirable fraction is 6×10^{-8}. The containment building covering the borehole during emplacement is designed to contain and limit the airborne particulate releases. The two stage HEPA filters used by the containment building will provide an additional 10^{-6} reduction in the number of airborne particles released into the atmosphere, bringing the final release fraction to 6×10^{-14}.

8.1.1.19 Bucket Emplacement: Pellets Break Upon Release (Category 3)

Upon release, the pellet–grout mix will flow out into the borehole. The weight of the column in the bucket and pressure that will be needed to push out the mix could cause some of the pellets to break due to unforeseen variations in the emplacement process. The severity of breakage will be mitigated by the presence of water at the bottom of the borehole due to influx from the surrounding rock. The water will reduce the impact, reduce the level of damage to the pellets, and will help contain any Pu generated by the breakage of pellets. This is further assisted by the fact that the Pu is immobilized in the ceramic matrix of the pellets. The severity of such an accident is expected to be low since contamination is expected to be limited to the borehole and the area just surrounding it given that a containment building covers the borehole. It is "unlikely" that a significant number of pellets could be damaged since the process will be tested with unloaded pellets to prevent this type of accident.

The source Pu at risk in this accident scenario is approximately 834 kg, the total Pu contained in one bucket. It is assumed that as a result of rough handling during mixing and delivery to the bucket that 1% of the pellets will fracture, releasing all of the Pu that they contain into their surroundings. The pellets will be water wet due to the presence of the cement slurry. Based on data from NUREG-1320, this will keep the airborne release to a 6×10^{-6} fraction of the released material. Therefore, the respirable fraction is 6×10^{-8}. The containment building covering the borehole during emplacement will further contain the particles. The two stage HEPA filters used by the containment building will provide an additional 10^{-6} reduction in the number of airborne particles released into the atmosphere, to yield a final release fraction of 6×10^{-14}.

8.1.1.20 Bucket Emplacement: Emplacement Facility Combustibles Fire (Category 3)

Flammable products at the Emplacement and Sealing Facility include engine oil and diesel fuel. These materials are associated with the generators needed for power on the emplacement crane and/or the drill rig. A crane will have an engine to provide the lifting power needed. A large fire in close proximity to a bucket could conceivably result in damage of the pellets in the uppermost portion of the bucket. Recall that the bucket will be hanging in the borehole while being filled with only its top exposed. This could result in a low-severity accident given that the Pu is immobilized and its position below the ground surface, which offers some fire protection. The likelihood of this accident scenario is "extremely unlikely," given that the generators and the crane engine will be located a considerable distance [30.5 m (100 ft) or more] from the bucket. No release is expected given the level of protection provided by the bucket and the containment building.

8.1.1.21 Bucket Emplacement: Emplacement Facility Electrical Fire (Category 3)

The extensive use of electric motors to drive the major mechanical systems of the emplacement facility, makes it conceivable that an electrical fire could occur. These motors will be located much closer to the bucket than to the generators that power them. They could be as close as 3.05 m (10 ft) from a bucket being filled prior to emplacement. For this reason, a fire sprinkler system will be employed to quickly suppress any electrical fires. It is "extremely unlikely" that a fire associated with this equipment would occur. No release of Pu is expected because of the containment provided by the bucket. In addition, the fire is expected to be small and brief.

8.1.1.22 Loss of Electrical Power (Category 3)

The Emplacement and Sealing Facility employs both generators and off-site electricity to power its systems.

Critical systems, such as HEPA filtered ventilation, will be designed with emergency backup power supplies. Therefore, a loss of electrical power will not result in a release of radioactivity. This scenario is deemed to be "anticipated" given that it can be expected to occur at a nominal frequency of about once per year.

8.1.1.23 Pumped Emplacement: Rupture of the Delivery Pipe (Category 3)

If the delivery pipe were to rupture, the pellets and cement would free-fall to the bottom of the borehole. This would probably result in some broken and fractured ceramic pellets. The response would be to pump cement in on top of the pellets to seal up the borehole. The likelihood of the pipe rupturing is "extremely unlikely" as such a critical system would be tested often before use. The severity will be mitigated by the fact that the borehole will be filled at the bottom with water due to influx from the surrounding rock. The water will reduce the impact, reduce the level of damage to the pellets, and will help limit the amount of Pu that becomes airborne due to the breakage of pellets. The pellets will also be wetted by the water in the cement slurry. Also, immobilization of the Pu in the ceramic matrix of the pellets will assist in limiting the amount of Pu that becomes airborne.

The source Pu at risk in this accident scenario is 100 kg, the total Pu contained in a single pumped batch. It is assumed that a rupture is not discovered until an entire batch had been pumped. Here 50% of the pellets will fracture, releasing all of the Pu they contain into the surroundings. It is also assumed that no protection is provided by the ruptured pipe. The pellets will be wet due to the presence of the cement slurry. Based on data from NUREG-1320, wetting of the slurry will limit the airborne release to a 6×10^{-6} fraction of the released material. The respirable fraction is therefore 3×10^{-6}. The containment building covering the borehole during emplacement will further contain the particles. The two stage HEPA filters used by the containment building will provide an additional 10^{-6} reduction in the number of airborne particles released into the atmosphere to yield a final release fraction of 3×10^{-12}.

8.1.1.24 Pumped Emplacement: Pellet–Grout Mix Solidifies in Delivery Pipe (Category 3)

In this scenario, the cement batch sets up in the delivery pipe before it can be released completely into the bottom of the borehole. This could be caused by errors in preparing the cement mix, such as the addition too much retardants or water, that cause a reduction in set time. It is also possible that a significant delay in pumping the batch could cause the cement to set prior to release. The corrective response is either to abandon the pipe and cement around it or to design for the pipe to break away from and release the solidified column. It would be difficult to remove the pipe from the borehole once the cement has set up inside. The likelihood of this occurrence is "unlikely." The mix formulation will be carefully controlled to prevent the cement from adversely influencing the fluid chemistry in the borehole. A very long set time may cause operational delays while a very short set time will cause this scenario to occur. The immediate severity of the accident is nonexistent, because no release of material will occur. There may be some minor long term impacts caused by corrosion products associated with the delivery pipe. These impacts could be more significant if the batch sets up in the upper portion of the delivery pipe near the top of the borehole. The concern is that post-closure, the disposed material could more easily reach the biosphere. The severity of this is difficult to estimate and further study is required.

8.1.1.25 Pumped Emplacement: Dropped Delivery Pipe (Category 3)

A failure of a mechanical system on the crane/drill rig or an operator error could cause the delivery pipe to be dropped to the bottom of the borehole during emplacement. A total free-fall is less likely to occur than a rapid descent into the borehole. The measures discussed previously for the case of a bucket being dropped are intended to prevent such an accident from occurring. The likelihood of this type of accident is deemed to be "extremely unlikely." The severity of the accident can be significant as a ruptured delivery pipe could release substantial quantities of ceramic pellets that are damaged (broken or cracked) into the unsealed borehole. The impact is likely to be fairly localized onsite with minimal impacts to offsite areas due to the presence of the containment building over the borehole. One response to the accident would be to cement the dropped pipe in place, assuming that the release valve has been damaged, so as to prevent the spread of material from the borehole. There may be some minor long term impacts caused by corrosion products associated with the pipe.

The source Pu at risk in this accident scenario is 100 kg, the total Pu contained in a pumped batch. It is assumed that as a result of the pipe being dropped 10% of the pellets will fracture releasing all of the Pu they contain into the surroundings. The pellets will be wet due to the presence of the cement slurry. Based on the data in NUREG-1320, the wetting will keep the airborne release to a 6×10^{-6} fraction of the released material. Therefore,

the respirable fraction is 6×10^{-7}. The containment building covering the borehole during emplacement will further contain the particles. The two stage HEPA filters used by the containment building will provide an additional 10^{-6} reduction in the number of airborne particles released into the atmosphere to yield a final release fraction of 6×10^{-13}.

8.1.1.26 Pumped Emplacement: Delivery Pipe Becomes Stuck in Borehole (Category 3)

The measures previously discussed for stuck bucket can be applied to a stuck delivery pipe in pumped emplacement. From these measures it is "beyond extremely unlikely" that the delivery pipe will become stuck in the borehole. The delivery pipe will be about 15.2 cm (6 in.) in diameter, and the borehole will be 0.66 m (26 in.) in diameter in the lowest part of the borehole. If by some unlikely event, a delivery were to become completely stuck in the borehole and the cement were to set up inside, it would have to be broken up by drilling and allowed to fall into the bottom of the borehole, or it could be cemented in place if it were deemed to be deep enough to achieve isolation. It is "beyond extremely unlikely" that a pipe would rupture as a result from becoming stuck in the borehole. Therefore, it is assumed that no release of Pu would occur. The concern is that post-closure, the disposed material could more easily reach the biosphere. The severity of this is difficult to estimate, and further study is required. There may be some minor long term impacts caused by corrosion products associated with the pipe.

8.1.1.27 Pumped Emplacement: Pellet–Grout Mixing System Breaks Pellets (Category 3)

The pellets will have to be mixed with the cement and then pushed under water, air pressure, or gravity into the delivery pipe. This process could cause at least some of the pellets to break or crack due to unforeseen events. The surfaces of the pellets will be wetted with cement, which will help to contain the Pu from the pellets. The contamination is expected to be limited to the mixing system and the pipe used for delivery. It is "unlikely" that a significant number of pellets could be damaged because the process will be tested with unloaded pellets to prevent this type of accident.

The source Pu at risk in this accident scenario is 100 kg, the total Pu contained in a pumped batch. It is assumed that as a result of rough handling during mixing and delivery to the pipe that 1% of the pellets will fracture, releasing all of the Pu that they contain into their surroundings. The pellets will be wet due to the presence of the cement slurry. Based on the data in NUREG-1320, wetting will limit the airborne release to a 6×10^{-6} fraction of the released material. Therefore, the respirable fraction is 6×10^{-8}. The containment building covering the borehole during emplacement is designed to contain and limit the airborne particulate releases. The two stage HEPA filters used by the containment building will provide an additional 10^{-6} reduction in the number of airborne particles released into the atmosphere, bringing the final release fraction to 6×10^{-14}.

8.1.1.28 Pumped Emplacement: Pellet–Grout Mix Breaks Upon Release (Category 3)

Upon release, the pellet–grout mix will flow out into the borehole from the end of the delivery pipe. The weight of the column in the pipe, and pressure that will likely be needed to push out the mix, could cause some of the pellets to break due to unforeseen process variations. The amount of damage will be mitigated by the fact that the borehole will be filled at the bottom with water due to influx from the surrounding rock. The water will reduce the impact, reduce the level of damage to the pellets, and will help contain any Pu generated by the breakage of pellets. This is further assisted by the fact that the Pu is immobilized in the ceramic matrix of the pellets. The severity of such an accident is expected to be low since contamination is expected to be limited to the borehole and the area just surrounding it given that a containment building covers the borehole. It is "unlikely" that pellets could be damaged because the process will be tested with unloaded pellets to prevent this type of accident.

The source Pu at risk in this accident scenario is 100 kg, the total Pu contained in a pumped batch. It is assumed that as a result of rough handling during mixing and delivery to the pipe that 1% of the pellets will fracture, releasing all of the Pu that they contain into their surroundings. The pellets will be wet due to the presence of the cement slurry. Based on data from NUREG-1320, this will keep the airborne release to a 6×10^{-6} fraction of the released material. Therefore, the respirable fraction is 6×10^{-8}. The containment building covering the borehole during emplacement will further contain the particles. The two stage HEPA filters used by the containment building will provide an additional 10^{-6} reduction in the number of airborne particles released into the atmosphere, to yield a final release fraction of 6×10^{-14}.

8.1.1.29 Pumped Emplacement: Emplacement Facility Combustibles Fire (Category 3)

Flammable products at the Emplacement and Sealing Facility include engine oil and diesel fuel. These materials are associated with the generators needed for power on the emplacement crane or drill rig. A crane will have an engine to provide the lifting power needed. A large fire in close proximity the delivery pipe could result in damage to the pellets in the uppermost portion of the pipe. Recall that the pipe will be hanging in the borehole while being filled with only its top exposed. This could result in a low severity accident, given that the Pu is immobilized and its position below the ground surface offers some fire protection. The likelihood of this accident scenario is "extremely unlikely" given that the generators and the crane engine will be located a considerable distance [30.5 m (100 ft) or more] from the delivery pipe. No release is expected given the level of protection provided by the pipe and the containment building.

8.1.1.30 Pumped Emplacement: Emplacement Facility Electrical Fire (Category 3)

The extensive use of electric motors to drive the major mechanical systems of the emplacement facility, makes it conceivable that an electrical fire could occur. These motors will be located much closer to the delivery pipe than to the generators that power them. They could be as close as 3.05 m (10 ft) from a pipe being filled during emplacement. For this reason, a fire sprinkler system will be employed to quickly suppress any electrical fires. It is "extremely unlikely" that a fire associated with this equipment would occur. No release of Pu is expected due to the containment that is provided by the delivery pipe. In addition, the fire is expected to be small and brief.

8.1.1.31 Pumped Emplacement: Loss of Electrical Power (Category 3)

The Emplacement and Sealing Facility employs both generators and off-site electricity to power its systems. Critical systems, such as HEPA filtered ventilation, will be designed with emergency backup power supplies. Therefore, a loss of electrical power will not result in a release of radioactivity. This scenario is deemed to be "anticipated" given that it can be expected to occur at a nominal frequency of about once per year.

8.1.1.32 Summary of Design Basis Accident Scenarios and Release Fractions

See Table 8.1.1.321-1 below.

Table 8.1.1.32-1. Summary of Design Basis Accident Scenarios and Release Fractions.

Section	Accident Scenario	Accident Frequency(1)	Source Term at Risk	Respirable Fraction	Fraction Released
8.1.1.1	Earthquake	Extremely unlikely	5 kg Pu	10^{-7}	10^{-13}
8.1.1.2	Tornado	Extremely unlikely	NA	No release	No release
8.1.1.3	Flood	Extremely unlikely	NA	No release	No release
8.1.1.4	Pu storage container breakage	Unlikely, 10^{-5}/drum/yr	5 kg Pu	10^{-7}	10^{-15}
8.1.1.5	Pu storage container breach	Unlikely 10^{-6}/handling	5 kg Pu	10^{-7}	10^{-15}
8.1.1.6	On-Site Pellet Transporter Accident	Unlikely, 1.6×10^{-6}/truck km	5 kg Pu	No release	No release
8.1.1.7	Pellet–Grout Mixing Process Facility Fire	Extremely Unlikely	5 kg Pu	10^{-7}	10^{-13}
8.1.1.8	Ceramic Pellet Spill	Unlikely	0.5 kg Pu	10^{-7}	10^{-15}
8.1.1.9	Pellet–Grout Mix Spill	Anticipated	0.5 kg Pu	6×10^{-6}	6×10^{-14}
8.1.1.10	Failure of Ventilation Blower	Anticipated 0.5/yr	NA	No release	No release
8.1.1.11	Loss of Electrical Power	Anticipated 1/yr	NA	No release	No release

Table 8.1.1.32-1. Summary of Design Basis Accident Scenarios and Release Fractions (Continued).

Section	Accident Scenario	Accident Frequency[1]	Source Term at Risk	Respirable Fraction	Fraction Released
	BUCKET EMPLACEMENT				
8.1.1.12	Bucket Dropped during Emplacement	Extremely Unlikely	834 kg Pu	6×10^{-7}	6×10^{-13}
8.1.1.13	Bucket Stuck in the Isolation Zone	Extremely Unlikely	834 kg Pu	No Release	No Release
8.1.1.14	Bucket Stuck in Emplacement Zone	Extremely Unlikely	834 kg Pu	No Release	No Release
8.1.1.15	Failure of Release—Fails to Open	Extremely Unlikely	834 kg Pu	No Release	No Release
8.1.1.16	Failure of Release—Opens Early	Extremely Unlikely	834 kg Pu	3×10^{-6}	3×10^{-12}
8.1.1.17	Pellet–Grout Sets in Bucket	Extremely Unlikely	834 kg Pu	No Release	No Release
8.1.1.18	Mixing System Breaks Pellets	Extremely Unlikely	834 kg Pu	6×10^{-8}	6×10^{-14}
8.1.1.19	Pellets Break During Release	Unlikely	834 kg Pu	6×10^{-8}	6×10^{-14}
8.1.1.20	Emplacement Facility Fire—Combustibles	Extremely Unlikely	834 kg Pu	No Release	No Release
8.1.1.21	Emplacement Facility Fire—Electrical	Extremely Unlikely	834 kg Pu	No Release	No Release
8.1.1.22	Loss of Electrical Power	Anticipated	N/A	No Release	No Release
	PUMPED EMPLACEMENT				
8.1.1.23	Rupture of Delivery Pipe	Extremely Unlikely	100 kg Pu	3×10^{-6}	3×10^{-12}
8.1.1.24	Pellet–Grout Solidifies in Delivery Pipe	Unlikely	100 kg Pu	No Release	No Release
8.1.1.25	Delivery Pipe Dropped	Extremely Unlikely	100 kg Pu	6×10^{-7}	6×10^{-13}
8.1.1.26	Delivery Pipe Stuck in the Borehole	Beyond Extremely Unlikely	100 kg Pu	No Release	No Release
8.1.1.27	Mixing System Breaks Pellets	Unlikely	100 kg Pu	6×10^{-8}	6×10^{-14}
8.1.1.28	Pellets Break During Release	Unlikely	100 kg Pu	6×10^{-8}	6×10^{-14}
8.1.1.29	Emplacement Facility Fire—Combustibles	Extremely Unlikely	100 kg Pu	No Release	No Release
8.1.1.30	Emplacement Facility Fire—Electrical	Extremely Unlikely	100 kg Pu	No Release	No Release
8.1.1.31	Loss of Electrical Power	Anticipated	N/A	No Release	No Release

[1] Corresponds to terminology defined in DOE-STD-3009-94.

Descriptive Word	Annual Frequency
Anticipated	$10^{-1} \geq p > 10^{-2}$
Unlikely	$10^{-2} \geq p > 10^{-4}$
Extremely Unlikely	$10^{-4} \geq p > 10^{-6}$
Beyond Extremely Unlikely	$10^{-6} \geq p$

8.1.2 Beyond Design Basis Accidents

As described in DOE-STD-3009-94, Section 3.4.3 the evaluation of accidents beyond the design basis is required by DOE Order 5480.23 for the Safety Analysis Report (SAR) for a facility. The following paragraphs are excerpted here from DOE-STD-3009-94, Section 3.4.3 to define the scope of the beyond design accident analysis.

DOE Order 5480-23 requires the evaluation of accidents beyond the design basis to provide a perspective of the residual risk associated with the operation of the facility (See Attachment 1, paragraph 4.f(3)(d)11c, of the Order). Such beyond DBAs are not required to provide assurance of public health and safety. Accordingly, they serve as bases for cost–benefit considerations if consequences exceeding the Evaluation Guidelines are identified in the beyond DBA range. Such cost–benefit analysis would be performed outside the SAR with the concurrence of DOE.

It is expected that beyond DBAs will not be analyzed to the same level of detail as DBAs. The requirement is that an evaluation be performed that provides insight into the magnitude of the consequences of beyond DBAs (i.e., insight on potential facility vulnerabilities). This insight from the beyond DBA analysis has serves to identify additional facility features that could prevent or reduce severe consequences from beyond DBA accidents. For nonreactor nuclear facilities, however, the sharp increase in consequences from DBA to beyond DBA is not anticipated to approach that found in commercial reactors where the beyond DBA precedent was generated. No lower limit of frequency for examination is provided for beyond DBAs whose definition is frequency dependent. It is understood that as frequencies become very low, little or no meaningful insight is obtained.

Operational beyond DBAs are operational accidents with more severe conditions or equipment failures than are estimated for the corresponding DBA. For example, if a deterministic DBA assumed releases were filtered because the accident phenomenology did not damage the filters, the same accident with loss of filtration is a beyond DBA. The same concept holds true for natural phenomena events (i.e., events with a frequency of occurrence that is less than DBA frequency of occurrence). Beyond DBAs are not evaluated for external events.

Based on the above clarification of the scope of the beyond design basis accident analysis this group of accidents will be analyzed to a limited scale in the PEIS phase. The full scope treatment of this group is beyond the scope of the Safety Analysis Report also. The information provided for these separate accident scenarios are summarized in Table 8.1.2.5-1 of Section 8.1.2.5.

8.1.2.1 Failure of Ventilation Filter (Category 3)

A ventilation filter failure could occur in a process ventilation system. A HEPA filter could fail due to moisture collection on the filter, excessive pressure loading from exhaust blower, excessive heat from a fire, or mechanical shock. Failure of the HEPA filter alone is not expected to result in the release of radioactive particulates. However, radioactive particles could be released if the most significant consequences due to a filter failure involves the grout mixing process. It is postulated that a HEPA filter servicing the grout mixing process fails concurrently with a grouting process accident involving the spilling of 0.5 kg of plutonium (10% of the assumed vessel contents). Some of the spilled material is converted into an aerosol and becomes airborne as respirable particles. The aerosols pass through the failed ventilation filters and are released to the environment. Based on NUREG-1320, approximately 0.0006% of the spilled material becomes airborne as a respirable aerosol. This material is released to the Zone 1 ventilation area. If one filter of the three stage HEPA filter fails, the fraction of airborne material penetrating the filtration system increases to 10^{-6} from 10^{-8}. Therefore, 6×10^{-12} of the material at risk will reach the environment. This is judged to be a "beyond extremely unlikely" accident because it would require successive occurrences of two low probability events.

Mitigation features: Activity release is reduced by serial multistage HEPA filters.

8.1.2.2 Uncontrolled Chemical Reactions (Category 3)

There is no significant potential in the deep borehole disposition facility processes for uncontrolled chemical reactions that could lead to releases of radioactive material. Hydrogen will be produced in the battery of the uninterruptible power system. It is believed, however, that hydrogen detonations are possible with a bounding case that involves the pellet–grout mixing vessel. This vessel contains approximately 5 kg of Pu in a batch. It is assumed that ceramic pellet contains 0.1% fractured pellets; based on NUREG-1320, it would be conservative to assume 10% of the inventory becomes airborne. This material would be released to the Zone 1 ventilation system. Assuming a three stage HEPA filter system, the fraction of the released activity penetrating the filter system would be 10^{-8}. Therefore, the material at risk that could reach the environment as a result of an uncontrolled chemical reaction would be less than 10^{-12}. This is judged to be a "beyond extremely unlikely" accident.

Mitigation features: Accumulation of hydrogen within the battery room would require that the UPS be isolated from process ventilation system.

8.1.2.3 Pellet Storage Criticality (Category 3)

In accordance with NUREG-3.35 (*Nuclear Regulatory Guide*), the postulated pellet storage criticality event involves 10^{18} fissions in the initial pulse, followed by 47 additional pulses, for a total of 10^{19} fissions in 8 hr. The criticality event characterized here is estimated to result in 100% noble gas fission products; of these 25% are halogen (iodine) radionuclides that would become airborne. These radioactive materials would be released to the Zone 1 ventilation system. The exhaust HEPA filters do not mitigate the release of noble gases and halogens.

The plutonium concentration in the ceramic pellet design is sufficiently low to maintain criticality safety under all postulated accidents and natural phenomena conditions. The facility is designed to preclude flooding in the storage area. Therefore, a nuclear criticality accident in the pellet storage vault is judged to be a "beyond extremely unlikely" accident.

8.1.2.4 Pellet–Grout Mixing Process Criticality (Category 3)

In accordance with NUREG-3.35, the criticality events involve 10^{18} fissions in the initial pulse, followed by 47 additional pulses, for a total of 10^{19} fissions in 8 hr. The criticality event described here is estimated to result in 100% noble gas fission products; of these 25% are halogen (iodine) radionuclides that would become airborne. These radioactive materials would be released to the Zone 1 ventilation system. The exhaust HEPA filters do not mitigate the release of noble gases and halogens.

The plutonium concentration in the ceramic pellet design is sufficiently low to maintain criticality safe under all postulated accidents during pellet–grout mixing process conditions. Therefore, a nuclear criticality accident in the grout pellet mixing process is judged to be a "beyond extremely unlikely" accident.

Mitigation features: Plutonium concentration in the pellet is designed to ensure that an accidental chain reaction is not credible, even under water saturated fully reflected conditions.

8.1.2.5 Summary of Beyond Design Basis Accident Scenarios and Release Fractions

See Table 8.1.2.5-1 below.

8.2 Facility-Specific Accident Mitigating Features

Safety features will be designed to mitigate the consequences of the postulated accident scenarios. These features are identified and discussed after each accident scenario description along with their probability of failure and impact on the plutonium release frequency. These features are summarized here for ease of locating them as an aid to design.

The main mitigating features are of two classes:

1. Confinement/Containment Systems
2. Accident Progression Control Systems

These features are in addition to the prevention and protection systems that are built into the design, construction, installation, fabrication, operation, and quality assurance of the structures, systems, and components (SSCs) by using industry standard practice and methods. In addition, design margins (e.g., safety factors, increased tolerance, beyond design performance parameters) provide resistance to the occurrence of accidents.

The main mitigating feature of the confinement group is the ventilation system with HEPA filter. Redundant HEPA filters provide mitigation for release of plutonium to the outside environment in the event of an accident that compromises the prevention and protection systems.

The main suppression feature is the automatic fire sprinkler systems and similar systems that assist operator actions for mitigation.

Seismically hardened design, tornado dampers, fire dampers, and construction of the facility grade above the maximum probable flood level (MPF) are examples of protection features that will be considered from the preliminary design stage through the construction stage.

Storage container design with low seal stress minimizes the container breakage. Shipping packages and casks will be designed with double containment for transportation safety.

Table 8.1.2.5-1. Summary of Beyond Design Basis Accident Scenarios and Release Fractions.

Section	Accident Scenario	Accident Frequency[1]	Source Term at Risk	Respirable Fraction	Fraction Released
8.1.2.1	Failure of Ventilation Filter	Beyond Extremely Unlikely	0.5 kg Pu	6×10^{-6}	6×10^{-12}
8.1.2.2	Uncontrolled Chemical Reaction	Beyond Extremely Unlikely	5 kg Pu	10^{-6}	10^{-12}
8.1.2.3	Pellet Storage Criticality	Beyond Extremely Unlikely	10^{19} prompt fissions in 8 hr noble gas and halogen fission products release	1 noble gas 0.25 halogen	1 noble gas 0.25 halogen
8.1.2.4	Pellet–Grout Mixing Criticality	Beyond Extremely Unlikely	10^{19} prompt fissions in 8 hr noble gas and halogen fission products release	1 noble gas 0.25 halogen	1 noble gas 0.25 halogen

[1] Corresponds to terminology defined in DOE-STD-3009-94.

Descriptive Word	Annual Frequency
Anticipated	$10^{-1} \geq p > 10^{-2}$
Unlikely	$10^{-2} \geq p > 10^{-4}$
Extremely Unlikely	$10^{-4} \geq p > 10^{-6}$
Beyond Extremely Unlikely	$10^{-6} \geq p$

Redundant on-site emergency power system and UPS as a backup to the off-site power system is another important mitigation system against loss of off-site power. The battery room ventilation system mitigates the buildup of hydrogen gas in the room. Cranes, hoists, storage racks, and borehole steel lines are all designed for fail-safe operation.

The plutonium concentration in the coated ceramic pellets has been specified at level low enough to ensure that an accidental chain reaction would not cause a criticality accident under *any* dry and water-saturated operational and accident condition. Furthermore, the tough non-Pu-loaded ceramic coating of the ceramic pellets provides a substantial primary containment barrier to the release of plutonium to the environment during pre-closure surface processing and borehole emplacement operations.

9. TRANSPORTATION

9.1 Intrasite Transportation

9.1.1 On-Site Transportation of Radiological and Hazardous Materials

Currently, the transportation of radioactive material on-site at a DOE facility is not covered by Federal Regulations. Regulations will be developed for the transportation of plutonium in the form of ceramic-coated ceramic pellets loaded with plutonium. The transportation of plutonium in non–weapons grade materials is controlled by DOE-EH.

The transportation of immobilized plutonium feed material and the plutonium in its final disposal form on-site does not represent a significant potential impact to the off-site environment because the disposal form will arrive on-site in hermetically sealed transportation packages with double containment (see Section 9.2). After undergoing MC&A processing and being hermetically resealed in the same packages they will be stored in the receiving and storage building of the Surface Processing Facility. They are moved on-site as needed from the storage building to the Emplacing–Borehole Sealing Facility in the same containers. The transportation routes used and the procedures that are adopted to mitigate accident related potential impacts are addressed below.

Nonradioactive hazardous materials transported on-site are non-Pu-loaded filler ceramic pellets, process chemicals, chemicals used for plant operation and maintenance, drilling, emplacement, and borehole sealing operations at the borehole array, waste management chemicals, fuel oils and gases, and gases used for on-site fabrication purposes as identified under Resource Needs in Chapter 5. These materials will be transported on-site in appropriate vehicles subject to applicable safety regulations.

9.1.2 Feed Form Transportation to the Surface Processing Facility

In this Deep Borehole Disposal Facility design, the feed material is in the form of Pu-loaded ceramic-coated spherical ceramic pellets, 2.54 cm (1 in.) in average diameter, which are fabricated at an off-site immobilization facility. At a plutonium loading of 1% by weight and 5 t/yr plutonium equivalent plutonium disposal rate, this represents 500 t/yr of Pu-loaded ceramic pellets arriving at the Surface Processing Facility to be received and stored. This Pu-loaded ceramic feed material will be delivered to the Surface Processing Facility in DOE-approved SSTs in 208-L (55-gal) metal drum transportation packages with double containment. No special safety or security requirements beyond those applied to off-site inter-facility transportation are required for on-site transit of these trucks from the site entrance to the Surface Processing Facility along the route identified as Plutonium Transportation Route 1 in the On-Site Transportation Map.

9.1.3 Disposal Form Transportation to Emplacing–Borehole Sealing Facility

The Pu-loaded coated ceramic pellets that arrive at the Surface Processing Facility in 208-L (55-gal) metal transportation containers, will be inspected and stored in the same packages. These transportation packages will be transported by truck to the Emplacing–Borehole Sealing Facility along the route identified as Plutonium Transportation Route 2 in the Site Plan and Transportation Route Map (Figure 2.1.2-2). DOE-approved intrafacility transportation trucks, equipped with special container handling fixtures will be used. These enclosed trucks will conform to site environmental, Materials Control and Accountability (MC&A), and Safeguards and Security (S&S) requirements.

9.2 Input Material Streams

9.2.1 Fissile Material Packaging for Transportation

Packaging Criteria

Shipments of radioactive materials fall into three categories: (1) low specific activity (LSA), (2) Type A quantities, and (3) Type B quantities. The Pu-loaded ceramic pellets fall into the Type B category because of the activity and quantity of plutonium in the ceramic material. A Type B package is designed to retain the integrity of containment and shielding when subjected to both normal and accident conditions. Because the total activity of plutonium to be transported in the package is greater than the A_2 quantities for normal plutonium forms, the material must be packaged in accordance with a DOT Certificate of Compliance, an NRC Certificate of Compliance, a DOT exempt packaging system or a DOT specification package.

In addition, according to 10 CFR-71.63, plutonium in excess of 20 curies per package must be packaged in a separate inner container placed within an outer container with both containers meeting leak testing requirements. This is referred to as the "secondary containment" or "double containment" requirement. Extra shielding for radiation protection is not required because the radioactivity of the pellets is low. Finally, because of the

large quantity of plutonium per package, shipment by the Safe Secure Transport System by Safe Secure Trailer (SST) is required.

Currently Available Packages

A preliminary search of available packages for the bulk transportation of Pu-loaded ceramic pellets indicates that there are no currently certified NRC-, DOT-, or DOE-approved packages with volumes large enough to contain 2.5 to 5 kg of Pu in ceramic pellet form at 1% Pu loading by mass. The capacity of the DOT-6M specification package is limited by the 2R inner vessel volume to about 2.294 L (140 in.^{3}). This limits the amount of pellet-form plutonium in one 6M/2R package to impractically low gram quantities (55 g). There are NRC certified Type B packages with adequately large cavity volumes. However, these packages, intended for the transport of highly radioactive materials, are large and heavy because of shielding requirements and are severely restricted in Pu quantity to the extent that they are not practical for bulk shipment of large volumes of ceramic pellets at low plutonium loadings. The DOE DC-1 package, designed and certified by the Martin Marietta Energy Systems Y-12 Plant, may be adapted to this application by modifying and recertifying the package for Pu-loaded ceramic pellets. A more suitable package is the Type B 208-L (55-gal) drum package, shown in Figure 9.2.1-1, that is currently being designed by Westinghouse, Hanford. This design, however, is in the pre–conceptual design phase, and additional work would be required to certify this package for the Pu-loaded ceramic pellets.

A comparison between the 6M/2R, DC-1, and two loading variants of the Westinghouse Type B drum at 0.055, 0.41, 3.6, and 5.1 kg of plutonium per package, respectively, is given in Table 9.2.1-1. The cost estimates in the table assume that these packages are decontaminated and reused as long as they meet the required tests prior to shipment. The Deep Borehole Disposal Facility requires

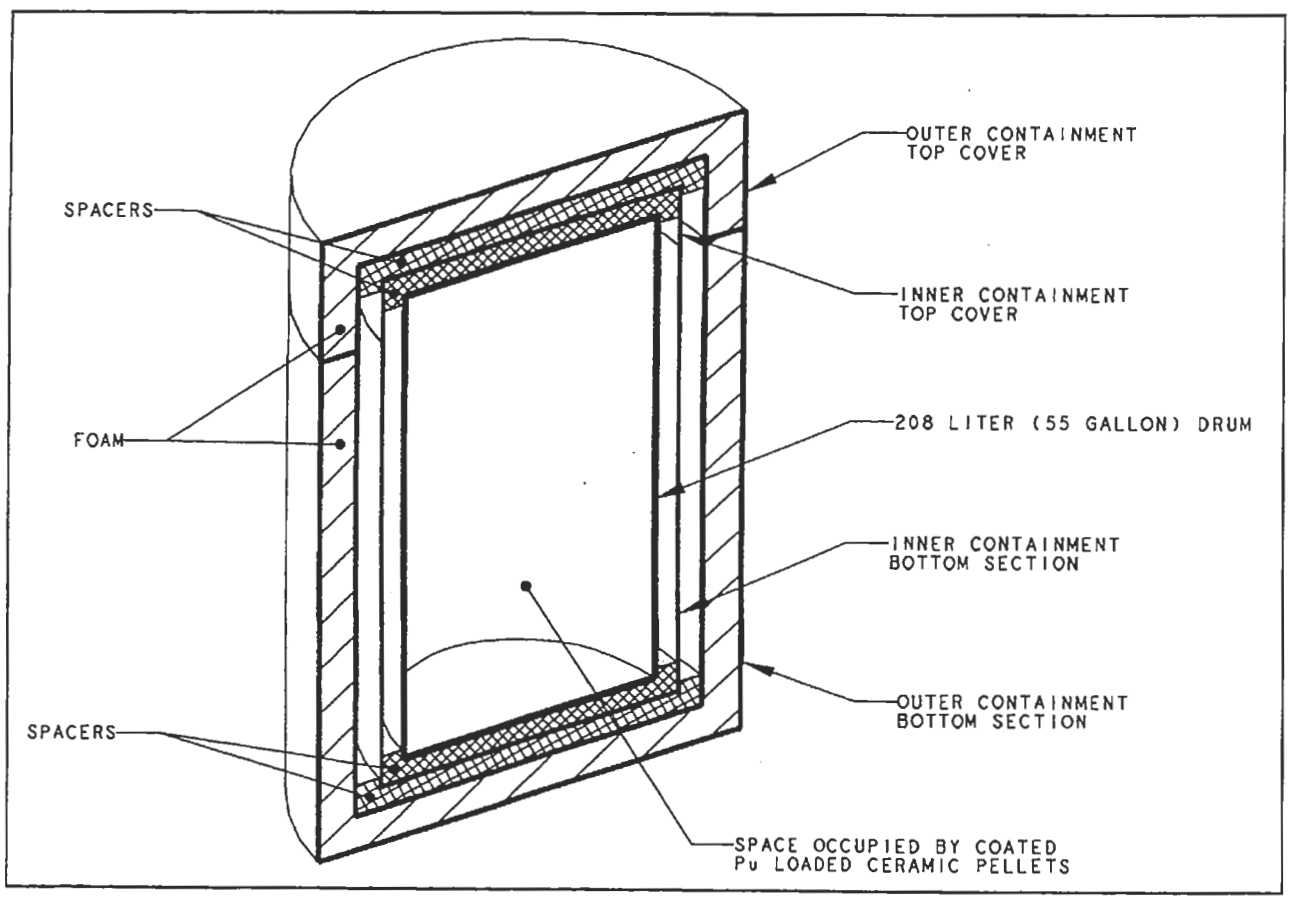

Figure 9.2.1-1. Modified Westinghouse Hanford Type B 208-L (55-gal) Drum Package.

Table 9.2.1-1. Candidate Packages for Transporting Immobilized Ceramic Pellets.

Package Type		DOT 6M/2R[1]	Martin Marietta DC-1[1]	Westing. Hanford Type B[1] (3.6 kg)	We Ha Typ (5.
Plutonium/Pellet	(g)	0.3432	0.3432	0.3432	0.
Weight/Pellet	(g)	34.32	34.32	34.32	3
Pellet packing vol. fraction	(%)	60	60	60	
Plutonium/package	(kg)	0.055	0.41	3.6	
Pellets/package		160	1,195	10,490	14
Pellet weight/package	(kg)	5.5	41	360	5
(Pellets + Package) Weight	(kg)	92	391	820	1,
2-Month Supply of Packages		15,152	2,032	232	1
Total # of Packages Shipped		909,091	121,920	13,920	9,
Cost/Package	(US $)	2,000	6,000	10,000	10
Total purchase cost[3]	(US $M)	18.18	12.19	2.32	1.

[1] Completely filled to maximum capacity.

[2] Container design and loading proposed for the Deep Borehole Facility, filled nearly to maximum (16,100 pellets).

[3] Cost of a 2-month supply of packages: Deep Borehole inventory (1-month supply), Immobilizatio storage, and Transportation pipeline (1-month supply).

an estimated 1-month supply of ceramic pellets in inventory for processing. The 2-month supply of packages in Table 9.2.1-1 assumes that an additional 1-month supply of packages would be in the transportation pipeline, both in transit and in storage at the immobilization facility awaiting shipment.

The Type B 208-L (55-gal) drum package being designed by Westinghouse, Hanford is the package preferred at this time for the Pu-loaded ceramic pellet option because its simpler design and larger capacity would reduce the cost of the packages, the cost of transportation, and perhaps more important, the handling costs during pellet packaging and processing. Even larger packages with double containment, and other alternatives, will be considered in the future for bulk shipment of the Pu-loaded pellets. The design and certification of an entirely new package will cost between $1.5 million and $3.0 million and will require from 3 to 5 yr. Modification of the Westinghouse Hanford 5.1-kg Type B package and its certification for transporting Pu-loaded ceramic pellets will require less time and is estimated to cost abou lion.

9.2.2 Transported Fissile Materials Shipping Volumes

The input material streams that require tra between the Deep Borehole Disposal Facility a locations are listed in Table 9.2.2-1. The only input material to the facility are the 1% Pu-loa ceramic pellets from the Immobilization Facili tion, the non-Pu-loaded, uncoated, commercial ceramic pellets are also identified here. The Westinghouse Hanford 5.1 kg Type B package above is assumed to be the package used for tr the Pu-loaded coated ceramic pellets from the zation Facility to the Deep Borehole Disposal Fa maximum cargo weight of an SST of 5,443 kg (permits only 5 of these packages to be transp SST per shipment.

Table 9.2.2-1. Intersite Transportation Data.

Category	Input Material No. 1	Input Material No. 2
Transported Materials		
Type	^{239}Pu-loaded ceramic coated ceramic pellets	Non-Pu-loaded commercial-grade uncoated ceramic pellets
Physical Form	Pu immobilized in 2.54-cm-diam spherical ceramic coated ceramic pellets; no Pu in ceramic coating	2.54-cm-diam uncoated spherical ceramic pellets
Chemical Composition	Titanate-based Synroc ceramic with Zirconolite and Perovskite as main constituents; 1% Pu-loading by mass, Gd neutron poison on a 1 mole Gd to 1 mole Pu basis.	Titanate-based Synroc ceramic with Zirconolite and Perovskite as main constituents
Packaging		
Type	208-L (55-gal) drum in double containment transportation package (proposed)	208-L (55-gal) drum
Certified by	DOT/DOE	DOT
Identifier	None	None
Container Weight (kg)	590	32
Material Weight (kg)	510	500
Isotopic Content (%)	93% ^{239}Pu, 6% ^{240}Pu, 1% (trace isotopes)	N/A
Average Shipping Volume		
Quantity/yr	500 t 1% Pu-loaded ceramic coated ceramic pellets	500 t non-Pu-loaded uncoated ceramic pellets
Average number of packages shipped/yr	980.4	1,000
Total number of packages shipped	9,804 over 10 years	10,000 over 10 years
Average number of packages per shipment	5 by SST	20 by commercial truck
Number of shipments/yr	196	50
Total number of shipments	1,961 over 10 years	500 over 10 years
Routing		
Destination facility type	N/A	N/A

10. REFERENCES

10 CFR 20, *Standards for Protection Against Radiation*, Office of the Federal Register, National Archive and Records Administration (January 1, 1994).

10 CFR 60, *Disposal of High-Level Radioactive Wastes in Geologic Repositories: Licensing Requirements*, Office of the Federal Register, National Archive and Records Administration (January 1, 1994).

10 CFR 61, *Licensing Requirements for Land Disposal of Radioactive Waste*, Office of the Federal Register, National Archive and Records Administration (January 1, 1994).

10 CFR 71, *Packaging and Transportation of Radioactive Material*, Office of the Federal Register, National Archive and Records Administration (January 1, 1994).

10 CFR 73.26, *Physical Protection of Plants and Materials*, Office of the Federal Register, National Archive and Records Administration (January 1, 1994).

10 CFR 820, *Procedural Rules for DOE Nuclear Activities*, Office of the Federal Register, National Archive and Records Administration (January 1, 1994).

10 CFR 830, *Nuclear Safety Management, Contractor and Subcontractor Activities: Proposed Rule and Public Hearing*, Federal Register, Vol. 56, No. 236, pp. 64316–64332 (December 9, 1991).

10 CFR 835, *Occupational Radiation Protection*, Office of the Federal Register, National Archive and Records Administration (January 1, 1994).

40 CFR 61.112, *Clean Air Act—National Emission Standards for Hazardous Air Pollutants*, Office of the Federal Register (1989).

40 CFR 141, *National Primary Drinking Water Regulations*, Office of the Federal Register, National Archive and Records Administration (July 1, 1993).

40 CFR 142, *National Primary Drinking Water Regulation Implementation*, Office of the Federal Register, National Archive and Records Administration (July 1, 1993).

40 CFR 191, Part II, *Environmental Radiation Protection Standards for the Management and Disposal of Spent Nuclear Fuel High Level and Transuranic Radioactive Waste; Final Ruling*, Federal Register, Vol. 58, No. 242, pp. 66398–66416 (December 20, 1993).

40 CFR 261, *Identification and Listing of Hazardous Waste*, Office of the Federal Register, National Archive and Records Administration (July 1, 1993).

49 CFR 171–180, *DOT Hazardous Material Regulations*, Office of the Federal Register, National Archive and Records Administration (October 1, 1993).

DOE/ET-0028, *Technology for Commercial Radioactive Waste Management*, Vol. 3, U.S. DOE Office of Waste Management (May 1979).

DOE Order 5480.23, *Nuclear Safety Analysis Reports*, USDOE (April 30, 1992).

DOE Order 5480.24, *Nuclear Criticality Safety*, USDOE (August 12,1992).

DOE Order 5481.1B, *Safety Analysis and Review Systems*, U.S. DOE (September 23, 1986).

DOE Order 5610.11, *Nuclear Explosives Safety*, US DOE (October 10, 1990).

DOE Order 5610.12, *Packaging and Off-Site Transportation of Nuclear Components, and Special Assemblies Associated with the Nuclear Explosives and Weapons Safety Program*, U.S. DOE (July 28, 1994).

DOE Order 5630.11, *Safeguard and Security Program*, US DOE (January 22, 1988).

DOE Order 5632.2A, *Physical Protection of Special Nuclear Material and Vital Equipment*, US DOE (February 9, 1988).

DOE Order 5633.3A, *Control and Accountability of Nuclear Material*, US DOE (February 3, 1988).

DOE Order 5634.1A, *Facility Approval, Security Survey and Nuclear Material Survey*, US DOE (February 3, 1988).

DOE Order 5820.2A, *Radioactive Waste Management*, Office of Defense Waste and Transportation Management, U.S. Department of Energy, Washington, DC (1988).

DOE Order 6430.1A, *General Design Criteria Manual*, US DOE (May 6, 1989).

DOE-STD-1020-94, *Natural Phenomena Hazards Design and Evaluation Criteria for Department of Energy Facilities*, Lawrence Livermore National Laboratory, Livermore, CA, UCRL-15910 (April 1994).

DOE-STD-1027-94, *Hazard Categorization and Accident Analysis Techniques for Compliance with DOE ORDER 5480.23*, Nuclear Safety Analysis Reports (1994).

DOE-STD-3005-YR (Proposal), *Evaluation Guidelines for Accident Analysis and Safety Structures, Systems, and Components* (February 1994).

DOE-STD-3009-94, *Preparation Guide for U.S. Dept. of Energy Non Reactor Nuclear Facility Safety Analysis Reports* (July 1994).

Harmon, C. D., Busch, R. D., Briesmeister, J. F., Forster, R. A., Criticality *Calculations with MCNP, A Primer*, Los Alamos National Laboratory Report LA-12837-M (1994).

IAEA Safety Series #6, *Regulations for Safe Transport of Radioactive Material*, 1985 Edition (as amended 1990), International Atomic Energy Agency, Vienna, Austria (1990).

MCNP-4a, *Monte Carlo N-Particle Code System*, Radiation Shielding Information Center, Oak Ridge National Laboratory, Report CCC-200 (October 1994).

National Academy of Sciences, *Management and Disposition of Excess Weapons Plutonium*, National Academic Press, Washington, D.C., 275 pp. (1994).

NUREG-0383, *Directory of Certificates of Compliance for Radioactive Materials Packages*, US Nuclear Regulatory Commission, Revision 16 (October 1993).

NUREG-1320, *Nuclear Fuel Cycle Facility Accident Analysis Handbook*, U.S. Nuclear Regulatory Commission (May 1988).

NUREG-3.35, *Assumptions Used for Evaluating the Potential Radiological Consequences of Accidental Nuclear Criticality*, Regulatory Guide 3.35, Rev 1, U.S. Nuclear Regulatory Commission (1979).

Rhoads, Patrick T., *Definition of the Spent Fuel Standard,* pre-draft review, private communication, MD1 US DOE, Washington, DC (January 1995).

Russell, Edward J. et al., *Surplus Fissile Materials Control and Disposition Project, Deep Borehole Task: Preliminary Review of Issues*, Predecisional Draft, Lawrence Livermore National Laboratory, Livermore, CA (September 30, 1994), 440 pages.

SAND80-1721, *Probability of Spent Fuel Transportation Accidents*, Sandia Laboratory (1981).

Uniform Building Code, International Conference of Building Officials, Whittier, California (1991).

Walker, E., *A Summary of Parameters Affecting the Release and Transport of Radioactive Material From an Unplanned Incident*, BNFO-81-2, Bechtel National Inc. (August 1981).

Wijesinghe, Ananda M., et al., *Deep Borehole Disposal Facility PEIS Data Input Report: Direct Disposal of Plutonium Metal/Plutonium Dioxide in Compound Canisters*, Lawrence Livermore National Laboratory, Livermore, CA, UCRL-LR-119481, Version 3.0 (January 15 1996).

Wijesinghe, Ananda M. et al., *Alternative Technical Summary Report for Immobilized Disposition in Deep Boreholes: Immobilized Disposal of Plutonium in Coated Ceramic Pellets in Grout Without Canisters*, Lawrence Livermore National Laboratory, Report No. UCRL-LR-121736, Version 3.0 (January 15, 1996).

Wijesinghe, Ananda M. et al., *Alternative Technical Summary Report for Direct Disposition in Deep Boreholes: Direct Disposal of Plutonium Metal/Plutonium Dioxide in Compound Canisters*, Lawrence Livermore National Laboratory, Report No. UCRL-LR-121737, Version 3.0 (January 15, 1996).

11. GLOSSARY

11.1 Special Terminology

Bentonite: A naturally occurring highly impermeable and chemically sorptive clay material that contains the swelling clay material smectite. It can also contain quartz, mica, feldspar, and calcite.

Borehole Array area: The northern part of the Deep Borehole Disposal Facility occupied by the borehole array and including the Drilling and Emplacing–Borehole Sealing Facilities.

Casing: Structure used to line the borehole and to prevent an inflow of material or water.

Cementing: The process of pumping a grout slurry either into the borehole or into the space between the borehole wall and the casing in borehole cementing operations.

Closure period: The period extending from the ending of the operation period to the completion of backfilling and sealing the deep boreholes and decontaminating, decommissioning of the facility as a whole, and making the facility ready to be placed on post-closure status.

Concrete: A mixture of cement, sand, water, sand ("fine aggregate"), and 0.635–2.54 cm (0.25–1.0 in.) diam solid particles called the "coarse aggregate." Chemical additives such as water reducers, superplasticizers, and swelling agents and materials such as silica fume and fly ash are often part of high-performance concrete formulations.

Construction period: The period extending from the beginning of construction activity to the commissioning of the deep borehole facility for acceptance of plutonium for disposal.

Disposal form: A generic term applied to the physical and chemical form of the plutonium-bearing material that is emplaced in the borehole. In the present immobilized deep borehole disposal facility design, it is Pu-loaded ceramic-coated ceramic pellets.

Disposal option: Any one of a number of alternatives identified for permanently disposing of weapons-usable excess fissile materials.

Disposition option: Any one of a number of alternatives identified for safely and securely storing, burning in reactors, or permanently disposing of weapons-usable excess fissile materials. These include long term storage in combination with high-level nuclear waste in a mined geologic repository, using as fuel in special reactors to convert to non-fissile fission products, geologic disposal in a deep borehole.

Drilling Facility: One or more drilling units each consisting of a drill rig, associated mud and water pumps, cementing trucks, storage tanks, standby generator, mud pits, personnel trailers, etc., as shown in the Drilling Facility Plot Plan.

Emplacing–Borehole Sealing Facility: One or more disposal form emplacing and borehole sealing units consisting of a crane, ceramic pellet–grout mix emplacing units, cementing trucks, pumps, waste treatment plant and personnel trailers, etc., as shown in the Emplacing Facility Plot Plan.

Emplacement canister: A metal canister in which a disposal form is emplaced within the borehole in canistered disposal options. No canister in used in the ceramic pellet disposal form option addressed in this report.

Emplacement zone: The bottom part of a deep borehole (2 km) where the disposal form is emplaced.

Grout: Specially formulated cement/sand/water mixtures with chemical additives. Differs from concrete by the absence of coarse aggregate material. Used for hydraulic sealing of void spaces.

High-level nuclear waste: Highly radioactive fission products resulting from reactor operations and nuclear fuel reprocessing that has radioactivity exceeding certain regulatory radiation limits.

Isolation zone: The upper part of a deep borehole (2 km) extending from the top of the emplacement zone to the ground surface used to seal and isolate the emplaced disposal form from the biosphere.

Main Facility: The southern part of the Deep Borehole Disposal Facility that includes all facility buildings and storage areas excluding the Borehole Array in the northern part. This includes the Surface Processing Facility, the Utility Support Facility, the Plant Waste Management Facility, the Central Warehouse, the Administration offices, Security, ES&H and Medical Centers, the Fire Station, and the personnel services building.

Mud: The fluid used in the drilling process. Often contains additives that cause it to appear mud-like.

Operation period: The period extending from the commissioning of the facility for acceptance of plutonium for disposal to the emplacement of the final load of plutonium and termination of accepting plutonium for disposal.

Post-closure period: An indefinitely long period (hundreds of millions of years) extending from closure of the facility to a time when the emplaced waste is no longer a security or safety hazard. It is expected that at least during the early years, the facility will be safeguarded and monitored.

Pre-closure period: The period covering the construction, operation, and closure (decontamination and decommissioning) phases of the Deep Borehole Disposal Facility.

Surface Processing Facility: The plutonium processing area of the Deep Borehole Facility in the receiving and processing building in the Main Facility area.

Sealant: A generic term used to refer to materials used to install low permeability seals within the borehole. The sealant materials for each of these uses are generally different and are as yet undefined, although many candidate materials are being considered. The latter include grout, bentonite, bentonite/sand mixtures, and other naturally occurring clays.

Transportation containers: The interior part 208-L (55-gal) drum primary container of the transportation package used for transporting the Pu-loaded ceramic coated ceramic pellet disposal form from the Immobilization Facility to the Deep Borehole Disposal Facility.

Transportation package: The 208-L (55-gal) drum primary container plus the external double containment assembly used for transporting the Pu-loaded ceramic coated ceramic pellet disposal form from the Immobilization Facility to the Deep Borehole Disposal Facility.

11.2 Acronyms and Abbreviations

CFE	Critical Flood Elevation
DBE	Design Basis Earthquake
DBF	Design Basis Flood
DBT	Design Basis Tornado
DOE	Department of Energy
DOT	Department of Transportation
EIS	Environmental Impact Statement

EKG	Electrocardiogram
EPA	Environmental Protection Agency
ES&H	Environmental Protection And Health
FMCD	Fissile Materials Control and Disposition
HEPA	High Efficiency Particulate Air
HLW	High-Level Waste
HVAC	Heating, Ventilating, and Air Conditioning
IAEA	International Atomic Energy Agency
km	Kilometers
KTB	German Scientific Drilling Program
LA	Limited Area
LANL	Los Alamos National Laboratory
LLW	Low-Level Waste
LLNL	Lawrence Livermore National Laboratory
MAA	Material Access Area
MC&A	Materials Control & Accountability
MBA	Materials Balance Area
MPF	Maximum Probable Flood
MVA	Megavolt Amperes
MW	Megawatt, Mixed Waste
MWh	Megawatt Hours
NESHAP	National Emission Standards for Hazardous Air Pollutants
NRC	Nuclear Regulatory Commission
OSHA	Occupational Safety And Health Administration
PA	Protected Area
PEIS	Programmatic Environmental Impact Statement
PPA	Property Protected Area

PRA	Probabilistic Risk Assessment
psia	Pounds Per Square Inch Absolute
R&D	Research and Development
RCRA	Resource Conservation And Recovery Act
ROD	Record of Decision
S&S	Safeguards And Security
SAR	Safety Analysis Report
SFM	Surplus Fissile Material
SKB	Swedish Nuclear Fuel & Waste Management Co., Sweden
SNM	Special Nuclear Material
SSC	Structures, Systems, and Components
SST	Safe Secure Trailer
t	Metric Ton (1,000 kg)
TRU	Transuranic Waste
UPS	Uninterruptible Power Supply
VA	Vulnerability Threat Assessment
WIPP	Waste Isolation Pilot Plant