970

LANL 1996b

LA-UR-95-4442

NEW MIXED OXIDE FUEL FABRICATION FACILITY DATA REPORT FOR THE FISSILE MATERIAL DISPOSITION PROGRAM PROGRAMMATIC ENVIRONMENTAL IMPACT STATEMENT

by

Los Alamos National Laboratory
Nuclear Materials and Stockpile Management Programs
Technology and Safety Assessment Division
and
Nuclear Materials Technologies Division

Photograph: by Chris J. Lindberg

DOE
Box 31
Item 8

r intended for publication in a journal or proceedings. Because changes may be made before publication, this preprint is made available with
ill not be cited or reproduced without the permission of the author.

LA-UR-95-4442

Title: **NEW MIXED OXIDE FUEL FABRICATION FACILITY DATA REPORT FOR THE FISSILE MATERIAL DISPOSITION PROGRAM PROGRAMMATIC ENVIRONMENTAL IMPACT STATEMENT**

Author(s): **Los Alamos National Laboratory**
Nuclear Materials and Stockpile Management Programs

Technology and Safety Assessment Division

and

Nuclear Materials Technologies Division

Submitted to: **Work done in support of the fissile Material Disposition Program**
Programmatic Environmental Impact Statement

Los Alamos
NATIONAL LABORATORY

Los Alamos National Laboratory, an affirmative action/equal opportunity employer, is operated by the University of California for the U.S. Department of Energy under contract W-7405-ENG-36. By acceptance of this article, the publisher recognizes that the U.S. Government retains a nonexclusive, royalty-free license to publish or reproduce the published form of this contribution, or to allow others to do so, for U.S. Government purposes. The Los Alamos National Laboratory requests that the publisher identify this article as work performed under the auspices of the U.S. Department of Energy. Los Alamos National Laboratory strongly supports academic freedom and a researcher's right to publish; therefore, the Laboratory as an institution does not endorse the viewpoint of a publication or guarantee its technical correctness.

Form No. 836 R5
ST 2629 10/95

NEW MIXED FUEL FABRICATION FACILITY DATA REPORT FOR THE FISSILE MATERIAL DISPOSITION PROGRAM PROGRAMMATIC ENVIRONMENTAL IMPACT STATEMENT

in support of the

Fissile Material Disposition Program

Programmatic Environmental Impact Statement

by

Los Alamos National Laboratory
Nuclear Materials and Stockpile Management Programs
Technology and Safety Assessment Division
&
Nuclear Materials Technologies Division

DO NOT REMOVE
FROM READING ROOM

This Data Report is being supplied to the Department of Energy and its contractors supporting the Fissile Materials Disposition Program. This report was prepared as an account of work sponsored by an agency of the United States Government. Neither the Regents of the University of California, the United States Government, nor any agency thereof, nor any of their employees, makes any warranty, express or implied, or assumes any legal liability or responsibility for the accuracy, completeness, or usefulness of any information, apparatus, product, or process disclosed, or represents that its use would not infringe privately owned rights. Reference herein to any specific commercial product, process, or service by trade name, trademark, manufacturer, or otherwise, does not necessarily constitute or imply its endorsement, recommendation, or favoring by the Regents of the University of California, the United States Government, or any agency thereof. The views and opinions of authors expressed herein do not necessarily reflect those of the Regents of the University of California, the United States Government, or any agency thereof.

PROPERTY OF
U.S. GOVERNMENT

DO NOT REMOVE
FROM READING ROOM

CONTENTS

Page

1.0. MISSIONS AND ASSUMPTIONS....1
- 1.1. MOX Fuel Fabrication Facility Missions....1
- 1.2. MOX Fuel Fabrication Facility Assumptions....3

2.0. NEW MOX FUEL FABRICATION FACILITY DESCRIPTION....10
- 2.1. General Facility Description....10
- 2.2. Design Safety....15
- 2.3. Safeguards and Security (S&S)....20

3.0 . SITE MAP AND LAND USE REQUIREMENTS....27
- 3.1. Site Map....27

4.0. PROCESS DESCRIPTIONS....29
- 4.1. Materials Receiving and Storage....29
- 4.2. PuO_2 Purification....32
- 4.3. Feed Materials Preparation....34
- 4.4. Fuel Pellet Fabrication....37
- 4.5. Fuel Rod Fabrication....39
- 4.6. Fuel Bundle Assembly....41
- 4.7. Process Materials Recycle....41
- 4.8. Waste Management System....46

5.0. RESOURCE NEEDS....52
- 5.1. Materials/Resources Consumed During Operation....52
- 5.2. Materials/Resources Consumed During Construction....53

6.0. EMPLOYMENT NEEDS....53
- 6.1. Employment Needs During Operation....53
- 6.2. Badged Employees at Risk from Radiological Exposure....58
- 6.3. Employment Needs During Construction....58

7.0. WASTES AND EMISSIONS FROM THE FACILITY....58
- 7.1. Wastes and Emissions During Operation....58
- 7.2. Wastes and Emissions Generated During Construction....62

8.0. DESIGN PROCESS FOR ACCIDENT MITIGATION....64
- 8.1. Operational, Design Basis, and Beyond Design Basis Bounding Accidents....64
- 8.2. Facility-Specific Potential Mitigating Features....74
- 8.3. Safety Goal....76

9.0. TRANSPORTATION....76
- 9.1. Intrasite Transportation....79

9.2 Intersite Transportation 79

10.0. REFERENCES 84

11.0. GLOSSARY 86
11.1. Unique Terms 86
11.2 Acronyms and Abbreviations 87

FIGURES

2-1. Materials flow diagram 12
2-2. Facility plot plan 13
3-1. New MOX FFF site map 28
4-1. MOX fabrication overall process flow diagram 30
4-2. Receiving and storage process flow diagram 31
4-3. PuO_2 purification process flow diagram 33
4-4. Feed material preparation process flow diagram 36
4-5. Fuel pellet fabrication process flow diagram 38
4-6. Fuel rod fabrication process flow diagram 40
4-7. Fuel bundle assembly process flow diagram 42
4-8. Materials recycle process flow diagram 43
4-9. Reject fuel rod and bundle processing process flow diagram 44
4-10. Clean MOX recovery process flow diagram 45
4-11a. Solid waste treatment process flow diagram 47
4-11b. Airborne emissions treatment process flow diagram 47
4-12. Liquid waste treatment process flow diagram 48
5-1. New MOX FFF water balance diagram 54
8-1. Accident classification methodology diagram 65

TABLES

1-1 WEST EUROPEAN MOX FUEL FABRICATION PLANTS 2
1-2 MOX FFF OPERATIONAL ASSUMPTIONS 4
1-3 FACILITY OPERATING BASIS 6
2-1 FACILITY BUILDING DATA 14
4-1 CONTAMINATED WASTE STREAM 50
4-2 NONCONTAMINATED WASTE STREAM 51
5-1 UTILITIES CONSUMED DURING OPERATION 53
5-2 CHEMICALS CONSUMED DURING OPERATION 55
5-3 MATERIALS/RESOURCES CONSUMED DURING CONSTRUCTION 56
6-1 EMPLOYMENT DURING OPERATIONS 56
6-2 NUMBER OF CONSTRUCTION WORKERS NEEDED BY CRAFT AND BY YEAR 59
7-1 ANNUAL EMISSIONS DURING OPERATIONS 60
7-2 ANNUAL SPENT FUEL AND WASTE VOLUMES DURING OPERATION 61
7-3 EMISSIONS DURING THE PEAK CONSTRUCTION YEAR 63
7-4 TOTAL WASTES GENERATED DURING CONSTRUCTION 63
8-1 DOSE RECEIVED FROM A CRITICALITY ACCIDENT 71
8-2 IMPORTANT NUCLIDES RELEASED FROM POWDER PLUTONIUM CRITICALITY 72
9-1 FUEL BUNDLE THROUGHPUT CHARACTERISTICS FOR VARIOUS REACTOR TYPES 81
9-2 INTERSITE TRANSPORTATION DATA 82
9-3 INTERSITE TRANSPORTATION DATA FOR FUEL BUNDLES 83

1.0. MISSIONS AND ASSUMPTIONS

1.1. MOX Fuel Fabrication Facility Missions

The mixed-oxide (MOX) Fuel Fabrication Facility (FFF) accepts surplus plutonium in oxide form and, through a well-established and practiced process, fabricates mixed-plutonium oxide (PuO_2)-uranium oxide (UO_2) fuel. This fuel will be irradiated in the reactors selected for plutonium disposition. A number of types of water-cooled reactors are candidates for this mission.

The disposition of surplus weapons plutonium by incorporating it into MOX fuel and irradiating this fuel in reactors has been considered in a number of broad-ranging policy studies that deal with the disposition of excess fissile material. The most definitive of these is the National Academy of Sciences study on the Management and Disposition of Excess Weapons Plutonium (Ref. 1-1). The authors of this study regard the use of excess weapons plutonium for fuel in existing nuclear reactors as one of the two most promising alternatives for processing plutonium into a form that would make the plutonium as difficult to recover as the plutonium in existing commercial spent fuel.

The U.S. Congress, Office of Technology Assessment (Ref. 1-2), and a RAND study (Ref.1-3) also considered the use of plutonium in MOX fuel as a option for converting excess plutonium into a proliferation resistant form. An American Nuclear Society study (Ref. 1-4) recommended that the MOX fuel irradiation option be promptly implemented for the disposition of surplus plutonium. The technical viability of producing MOX fuel from excess plutonium was unquestioned in each of these studies because of European experience in producing MOX fuel from plutonium separated from commercial reactor spent fuel.

MOX fuel fabrication has been under way in Europe for some time, with several large state-of-the art facilities nearing completion. A country-by-country review of European nuclear technology, including MOX fuel fabrication capabilities, is given in Ref. 1-5. Table 1-1 lists the MOX fuel plants that have been completed or are under construction. This table does not include several laboratory-scale pilot plants that could produce small quantities of MOX fuel.

In France, the decision was made in 1985 to recycle plutonium in French pressurized water reactors (PWR). Experience with 30% MOX assembly operation is described in Ref. 1-6. In the United Kingdom, early MOX experience was primarily with fast reactor fuel. Ref. 1-7 discusses the design of a MOX fuel plant for fast reactor fuel, the irradiation performance of the fuel, and the conversion of a pilot scale plant to MOX production for thermal reactors. In Germany, the decision has also been

TABLE 1-1
WEST EUROPEAN MOX FUEL FABRICATION PLANTS

Facility	Operator	Capacity (MTHM/yr)	Comments
Belgium			
Dessel P0	Belgonucleaire	35	Started up 1973.
France			
Cadarache	Cogema	30	Started up 1990.
Melox	Cogema	160	Completed 1995.
United Kingdom			
MDF	BNFL	8	Started up 1993.
SMP		120	To start up 1998.
Germany			
Hanau	Siemens	25 120	Facility completed, will not be operated because of opposition to licensing.

made to recycle plutonium. Germany has significant pilot scale experience with the manufacture of MOX fuel for light water reactors. In addition, a large scale MOX facility was constructed (Ref. 1-8). Because of a changing political climate, there were difficulties in licensing the facility. The decision has been made not to proceed with licensing and operation of the facility.

MOX fuel fabrication technology and operational experience at the Dessel Plant in Belgium is described in Ref. 1-9. MOX fuel produced by this plant has operated without significant problems. The experience gained at the Dessel Plant has been used in the design of the next generation MELOX plant being built in France. German experience in the use of MOX fuel is detailed in Ref. 1-10. Experience with this fuel has been satisfactory, with no MOX-specific characteristic that could limit the burnup potential of this fuel compared with UO_2 fuel. Experience in Belgium is discussed in Ref. 1-11. Performance has been good.

As part of the excess fissile material disposition decision making process, U.S. and Canadian reactor vendors were contracted by the U.S. Department of Energy to examine the feasibility of burning MOX fuel made from surplus plutonium in reactors of their manufacture. The results of these studies were used in the preparation of the specifications from which this report was developed. No significant technical barriers to the use of MOX fuel in existing or evolutionary reactors were noted in any of the vendor reports.

Asea Brown Boveri/Combustion Engineering (ABB/CE) (Ref. 1-12) examined the use of MOX fuel in existing CE reactors and evolutionary CE reactor designs. CE System 80 reactors were designed so they could be modified to utilize full MOX

cores. Additional control rod drives and control rods would have to be added to these reactors to enable utilization of a full MOX core. Three System 80 reactors are in operation. System 80+ reactors, ABB/CE's evolutionary design, could utilize full MOX cores with a higher concentration of plutonium.

Westinghouse (Ref. 1-13) studied MOX use in a variant of their small, evolutionary PWR design (AP600) and also in a larger PWR. To utilize full MOX cores in existing Westinghouse PWRs, depletable neutron absorbers would be needed. Westinghouse has proprietary technology to apply depletable neutron absorber coatings to fuel pellets. Some development work would be needed to apply this technology to MOX fuel pellets. Westinghouse also performed some preliminary design work for a MOX FFF.

General Electric devised schemes to utilize MOX fuel in advanced boiling water reactors (BWRs) (Ref. 1-14) and in existing BWRs (Ref. 1-15). No significant barriers to the use of MOX fuel in these reactors were identified, but depletable neutron absorbers would be needed.

Atomic Energy of Canada, Limited (AECL) (Ref. 1-16) examined the use of existing CANDU reactors for burning MOX. Existing CANDU fuel bundle technology can incorporate MOX fuel and separate depletable neutron absorber rods without significant changes in the operational envelope of the reactors. An advanced fuel bundle design could, with additional development, be utilized to burn the surplus weapons plutonium inventory at a faster rate.

1.2. MOX Fuel Fabrication Facility Assumptions

The MOX FFF accepts surplus plutonium in oxide form (PuO_2) from consolidated storage. Uranium Oxide (UO_2) is obtained from a commercial source in a form ready for processing. This UO_2 may contain natural or depleted uranium. This PuO_2 is then combined with UO_2 and fabricated into MOX fuel for ultimate disposition in water-cooled, power-producing reactors. These reactors can be of the heavy-water CANDU type, or the light-water type, such as existing and advanced PWRs or BWR. The general fabrication process is as follows: as required, oxide from off-site storage is received and entered into onsite storage, where it is appropriately cataloged. When needed for the actual fabrication process, the PuO_2 is retrieved from storage and prepared for MOX fabrication. The PuO_2 is blended with UO_2 (as well as any required depletable neutron absorbers) obtained from an off-site supplier, fabricated into pellets, loaded into fuel rods, and assembled into fuel bundles. These bundles, which are stored on site for up to 1 yr, then are shipped to the disposition reactor site for loading into the reactor.

The following sections describe specific assumptions used to develop the preconceptual designs and data for the New MOX FFF addressed in this Programmatic Environmental Impact Statement (PEIS).

1.2.1. Facility Capacity/Capability

1. The MOX FFF will have the capacity to store a 1-yr supply of fresh fuel bundles. Consequently, the operating period of the MOX FFF will be identical to the operating period of the selected reactor alternative, with initial operation beginning 1 yr before initial startup of the dispositioning reactor(s). Table 1-2 summarizes potential reactor types being considered in this PEIS along with reactor-operating periods identified in Ref. 1-17.

2. Based on Ref. 1-17, a total of 50 MT of weapons-grade (WG) plutonium will be dispositioned over the operating period of the MOX FFF and reactor(s). As shown in Table 1-2, this translates to a plutonium throughput rate of between 2 and 3 MT of Pu/yr.

3. The average enrichment of weapons-grade plutonium in MOX will determine the MOX throughput required for the FFF and subsequently the size and environmental impact of the facility. Table 1-2 shows that the average plutonium enrichment of MOX varies with reactor type and falls between 1.52% and 6.75%, based on values derived from Ref. 1-18.

TABLE 1-2
MOX FFF OPERATIONAL ASSUMPTIONS

Reactor Type	Reactor Operating Period based on Ref. 1-17 (yr)	Average MOX Enrichment of WG Pu in HM based on Ref. 1-18 (% HM)	Plutonium Throughput (MT/yr)	MOX Throughput (MTHM/yr)
Existing				
GE[a]-full MOX BWR	23	2.97	2.2	73.2
W[b]-full MOX PWR	23	4.29	2.2	50.7
ABB/CE[c]-full MOX System 80	23	4.23	2.2	51.4
CANDU-reference MOX	25	1.52	2.0	131.6
CANDU-CANFLEX MOX	25	2.7	2.0	74.1
Evolutionary				
GE-MOX ABWR	17	5.53	2.9	53.2
ABB/CE-MOX System 80+	17	6.75	2.9	43.6
W-MOX PDR 600	17	6.6	2.9	44.6
W-MOX PDR 1400	17	6.6	2.9	44.6

[a] GE - General Electric
[b] W - Westinghouse
[c] ABB/CE - Asea Brown Boveri/Combustion Engineering

4. The average enrichment and plutonium throughput rate determine the throughput rate of fresh fuel in terms of metric tons heavy metal (MTHM) per year, both plutonium and uranium. These throughputs, again depending on the reactor type, are shown in Table 1-2, and range between 45 and 132 MTHM/yr. This is the actual production rate required of the FFF. Consequently, the nominal MOX throughput is assumed to be 50 MTPu divided by the life of the project, and the bounding MOX throughput is assumed to be 150 MTHM/yr.

5. Although the actual MOX FFF. throughput ranges between 50 and 150 MTHM MOX/yr, the environmental impact of the facility is based on the bounding throughput rate of 150 MTHM MOX/yr.

6. No capability is included for removing americium and gallium from the plutonium. The presence of these materials is assumed to have no significant impact on the fabrication process or on the operation and safety of the dispositioning reactors.

7. All other materials required for the fabrication process besides the plutonium oxide (i.e. uranium oxide, bundle materials, and depletable neutron absorbers if included in the fuel bundles) are assumed to be provided off site in the required amounts and be suitable for immediate use in the identified processes.

8. All fabrication processes are glovebox operations and do not require remote capabilities. (Consistent with ALARA goals, state-of-the-art remotely operated equipment will be used.)

9. Process equipment lifetimes will be greater than the facility usage requirements.

10. Fabrication process generation of fuel scrap material will be better or equal to recent applicable fuel fabrication experience.

11. The fuel scrap recovery process will yield a minimum of 99.5% of plutonium back to the MOX fabrication process.

12. All activities associated with the facility will be performed in accordance with appropriate Quality Assurance (QA) standards.

13. All necessary research and development efforts will have been completed before the start of facility design.

1.2.2. Facility Operating Basis. For the purposes presented here, the schedule of design, construction, operation, and restoration are summarized in Table 1-3. The

TABLE 1-3
FACILITY OPERATING BASIS

Activity	Yr
Research, Development, and Design	1996–1998
Construction	1998–2003
Operation	2003–2028
Restoration	2028–2038

primary constraint on this schedule is the coincident operation of the MOX FFF with that of the dispositioning reactor(s). Based on Ref. 1-17, the earliest reactor start date is 2004, and because of assumption 1 (mentioned above) the earliest MOX FFF start date is 1 yr earlier, or 2003. A 6-yr construction period is assumed based on engineering judgment and recent experiences in constructing nonreactor nuclear facilities. For purposes of illustration, the schedule also is assumed to start in 1996.

The maximum operating period of 25 yr is shown, along with a 10-yr restoration period.

1.2.3. Compliance. The facility is designed, constructed, and operated in compliance with all existing federal, state, and local laws and regulations. In addition to meeting all Department of Energy (DOE) requirements, the facility will be licensable by the Nuclear Regulatory Commission (NRC) and inspectable by the International Atomic Energy Agency (IAEA).

1.2.3.1. Rules, regulations, codes, and guidelines. The safety approval of the design, construction, and operation of the MOX fuel fabrication facility could be performed by either the DOE or the NRC. The following sections provide a brief summary of the DOE and NRC review approval processes, applicable requirements and regulations, experience base, and other considerations in the selected approach. The DOE requirements that must be met by the facility are imposed by DOE rules, codes, and federal regulations.

The body of NRC regulations, guidance, and review criteria (sometimes termed the "regulatory base") applicable to the licensing of MOX fuel fabrication activities was going through significant change and upgrading in the late 1970s, when most of the operations began to be closed or scaled back. The regulations of 10CFR70 have continued to be revised and updated regularly because Part 70 covers all nuclear fuel fabrication operations, not just those involving plutonium. Thus, it is possible that the current regulations themselves would need little or no revision to allow NRC's Office of Nuclear Materials Safety and Safeguards to accept an application and to issue a license for MOX fuel fabrication operation.

However, unlike the regulations, the regulatory guides that pertain specifically to operations with plutonium have not been maintained. The regulatory guides provide the applicant with details of the format, content, data requirements, and suggested technical approach. Of 13 Divisions-3 Regulatory Guides (Fuels and Materials Facilities) listed in Table 1-5 that deal specifically with plutonium operations, only one has been updated since 1979.

Regulatory Guide 3.39 has not been updated since its initial issuance in 1976. A Standard Review Plan (SRP), such as that for power reactor license applications, has never been issued by the NRC for fuel fabrication license applications. An SRP sets forth the methods and acceptance criteria that the NRC staff will use in reviewing the application. Therefore, it can serve as a valuable guide for preparing a license submittal that will meet most of the tests and conditions that might be placed on it by the NRC reviewers. Submitting a license application without the benefit of a current Standard Content and Format Guide and an SRP will necessitate a more involved iterative process with the NRC staff than would otherwise be expected.

1.2.3.2. Safeguards and security (S&S). Safeguards and security must be implemented to ensure that nuclear materials and information are protected as required by DOE Orders, as well as NRC regulations and applicable IAEA requirements. In particular, special nuclear material (SNM) must be safeguarded according to the graded approach required by DOE Order 5633.3B. The graded approach provides for the most control and effort for the types and quantities of SNM that can be used most effectively in a nuclear explosive device. The material in the MOX FFF will be highly attractive and protected. The SNM attractiveness levels and the quantities on inventories for the facility will exceed the threshold for a Category I nuclear facility as defined in DOE Order 5633.3B. Thus, the facility's S&S systems must be designed to meet Category I protection requirements.

The S&S system must be designed to meet the DOE Design Basis Threat, as well as any site-specific threats as evaluated by site-specific vulnerability assessments (VAs). It must protect against all possible malevolent acts, including theft of SNM, radiological and toxicological sabotage, and loss of classified and sensitive information. These threats from both outsiders and insiders include terrorists, criminals, disgruntled employees, and foreign agents. The targets for theft include plutonium and uranium oxides in process or in storage.

While providing the highest levels of protection and compliance to DOE orders and NRC regulations (and IAEA requirements, as appropriate), the S&S system will, as appropriate:

1. minimize impact on operations;

2. complement other areas of facility operations (including nuclear safety, process control, quality control, and radiation protection);

3. be integral to facility design and minimize S&S costs; and

4. maximize reliability by using proven state-of-the-art technology.

Physical protection, material control, and accountability are important considerations in planning and designing the facility. In addition, classification clearances and personnel security programs will be required and implemented according to current DOE orders and guidance.

1.2.3.3. Environmental, safety, and health. The new MOX FFF design will comply with all applicable federal, state, and local laws and regulations. Additional industry consensus codes and standards are applied to the design as appropriate.

The facility structures, systems, and components are designed, fabricated, erected, and tested in accordance with the DOE Order 5700.6 series quality standards. These standards are commensurate with risks associated with the facility and the significance of each structure, system, and component in mitigating releases of radioactive and other hazardous materials or minimizing risk. As low as reasonably achievable (ALARA) radiological exposure principles are incorporated appropriately throughout the design of the facilities.

Because of the unique nature of this facility, the waste quantities stated in this document represent estimates based only on a combination of operating history at the Los Alamos National Laboratory (LANL) Plutonium Facility, together with known processing data from other sites and previously designed MOX fuel fabrication facilities. They are conservative to provide an upper bound while maintaining a high degree of confidence.

Environmental data (effluents and resource requirements) presented in this report are based on data from similar facilities within the existing weapons complex and the nuclear power industry. Adjustments have been made where appropriate.

Nuclear criticality safety controls (achieved through a composite of design and administrative measures) will ensure that operations involving plutonium are conducted such that an adequate margin of subcriticality exists during all normal and abnormal conditions. Where feasible, inherently safe geometries will be employed.

All fire sprinkler water discharged in process areas is contained and treated as process waste water.

The plant includes storm water retention facilities with the requisite National Pollutant Discharge Elimination System monitoring equipment. Rainfall within the Facility Limited Area and Protected Area is collected separately and routed to the storm water collection ponds. The ponds are sized to collect maximum precipitation observed during a 6-h period for a 25-yr storm.

Effluent estimates are based on the use of natural gas as primary fuel to the boilers and other miscellaneous energy users. Facility siting may dictate the use of an alternate fuel source.

A regional Radiation Emergency Assistance Center/Training Site (REACTS) facility is assumed to be available; monitoring and decontamination facilities, such as stabilization, mild decontamination, and staging for REACTS, are included on site.

The facility design is such that operators are not required to wear respiratory protection to meet radiological exposure limits while conducting routine operations. An exception to this is that respirators routinely will be required for downdraft operation. The facility design will use automation/robotics where practical to reduce personnel exposure.

1.2.3.4. Buffer zones. A 1-mile buffer zone is provided between plant operations and the site boundary. Some operations, such as the sanitary landfill and storm water ponds, may be located in the buffer zone. Distances between the buildings are based on technical, safety, and security considerations.

1.2.3.5. Decontamination and decommissioning. The facility design considers and incorporates provisions for decontamination and decommission.

1.2.3.6. Nonsafety/safety class. The safety classification of instrumentation and controls will be derived from the safety functions performed. This safety classification is based on DOE 6430.1B and DOE 5481.1B.

Safety class instrumentation will be designed to monitor identified safety related variables in safety class systems and equipment over expected ranges for normal operation, accident conditions, and for safe shutdown. When required, safety class controls will be provided to control these variables.

Suitable redundancy and diversity will be used when designing safety class instrumentation to ensure that safety functions can be completed when required, and that a single-point failure will not cause a loss of protective functions. Redundant safety class signals also must be protected physically or separated to prevent a common event from causing a complete failure of the redundant signals. Institute of Electrical and Electronic Engineers (IEEE) Standards 379 and 384 are the design basis for redundancy and separation criteria. Safety class instrumentation will be designed to fail in a safe mode following a component or channel failure. Safety class uninterruptible power supply (UPS) power will be provided when appropriate.

1.2.3.7. Toxicological/radiological exposure. Worker exposure to toxic agents will be ≤80% of the regulatory standard. The ALARA concept will be implemented in the design as it affects worker exposure to toxic agents.

Worker exposure to radiation will not exceed an annual dose of 1.0 rem effective dose equivalent (EDE). The goal for Facility workers is 0.5 rem EDE/yr. The ALARA process will be implemented in the design for radiation exposure of workers.

Public exposure to radiation at the site boundary from routine operations will not exceed 100 mrem EDE/yr per DOE 5400.5, or equivalent NRC regulation in effect at the time of design, Radiological Protection of the Public and Environment, and the Radiological Control Manual. The goal for the Facility for public radiation exposure is not to exceed 1 millirem EDE/yr. The ALARA process will be implemented in the design for radiation exposure of the public.

Facility design is such that operators are not required to wear respiratory protection in order to meet radiological exposure limits while conducting routine operations.

The number of persons required to work in contaminated areas is minimized and controlled.

The use of carcinogens is minimized or eliminated.

1.2.3.8. Waste management. Generation of all wastes is minimized subject to the constraints of ALARA.

No high level waste will be generated.

Low-level mixed waste is stored on site on a long-term basis until regulations allow conversion to low level waste (LLW).

LLW is disposed of off site.

Transuranic (TRU) waste is stored on an interim basis and then shipped to the Waste Isolation Pilot Plant (WIPP), where applicable.

Hazardous waste is shipped off site to an authorized Resource Conservation and Recovery Act (RCRA) facility for treatment and/or disposal.

2.0. NEW MOX FUEL FABRICATION FACILITY DESCRIPTION

2.1. General Facility Description

Plutonium oxide will be incorporated into MOX fuel assemblies for use in a power-producing reactor. The facility contains all of the buildings and infrastructure required to house unit operations, waste management, maintenance, utilities, general and administrative activities, and S&S.

The facility is a stand-alone operation. The facility will include a waste water treatment facility, a fire department, security guard services, and associated infrastructures.

2.1.1. Facility Functional Description. The purpose of the facility is to take PuO_2 from a storage facility(s), combine it with UO_2 supplied by a commercial vendor, produce mixed PuO_2-UO_2 that is suitable for reactor fuel, and to assemble fuel bundles with this MOX fuel for use in a power-producing reactor. All operations will be carried out in an environmentally safe manner. Figure 2-1 depicts the flow of key materials within the MOX FFF.

2.1.2. Plot Plan. The Fuel Fabrication Building is one of several structures located within the facility site boundaries. Figure 2-2 shows the relationship of the primary buildings to each other.

All of these buildings are located within a facility fence. A Protected Area (PA) containing the fuel fabrication, waste management, receiving and storage, chemical storage, and cold support and utilities buildings, is surrounded by a Perimeter Intrusion Detection Alarm System (PIDAS). Within the PA is a Material Access Area (MAA), consisting of the receiving and storage, fuel fabrication, and waste management buildings.

Note that the size, number, and arrangement of facility buildings is conceptual and can change significantly as the design progresses. The following drawings convey general layout information only.

2.1.3. Building Descriptions. The following descriptions relate to the buildings shown in Figure 2-2. Table 2-1 provides the estimated area required for each building. These values were developed from previously designed MOX fuel fabrication plants (scaled for throughput) and the TA-55 plutonium facility at LANL.

2.1.3.1. Fuel fabrication building. The Fuel Fabrication Building is the central structure within the facility site and houses most of the critical features. Table 2-1 shows an estimate for the total footprint area required for the processes located within the building. This building is considered to be an MAA.

2.1.3.2. Receiving and storage building. The Receiving and Storage Building is designed to receive process materials and supplies required for the fuel fabrication process and to store them for eventual use throughout the fabrication process. This building houses the plutonium vault, where PuO_2 is stored when not in use. It will not receive and store supplies for the administration area outside the security fence. This building is considered to be an MAA.

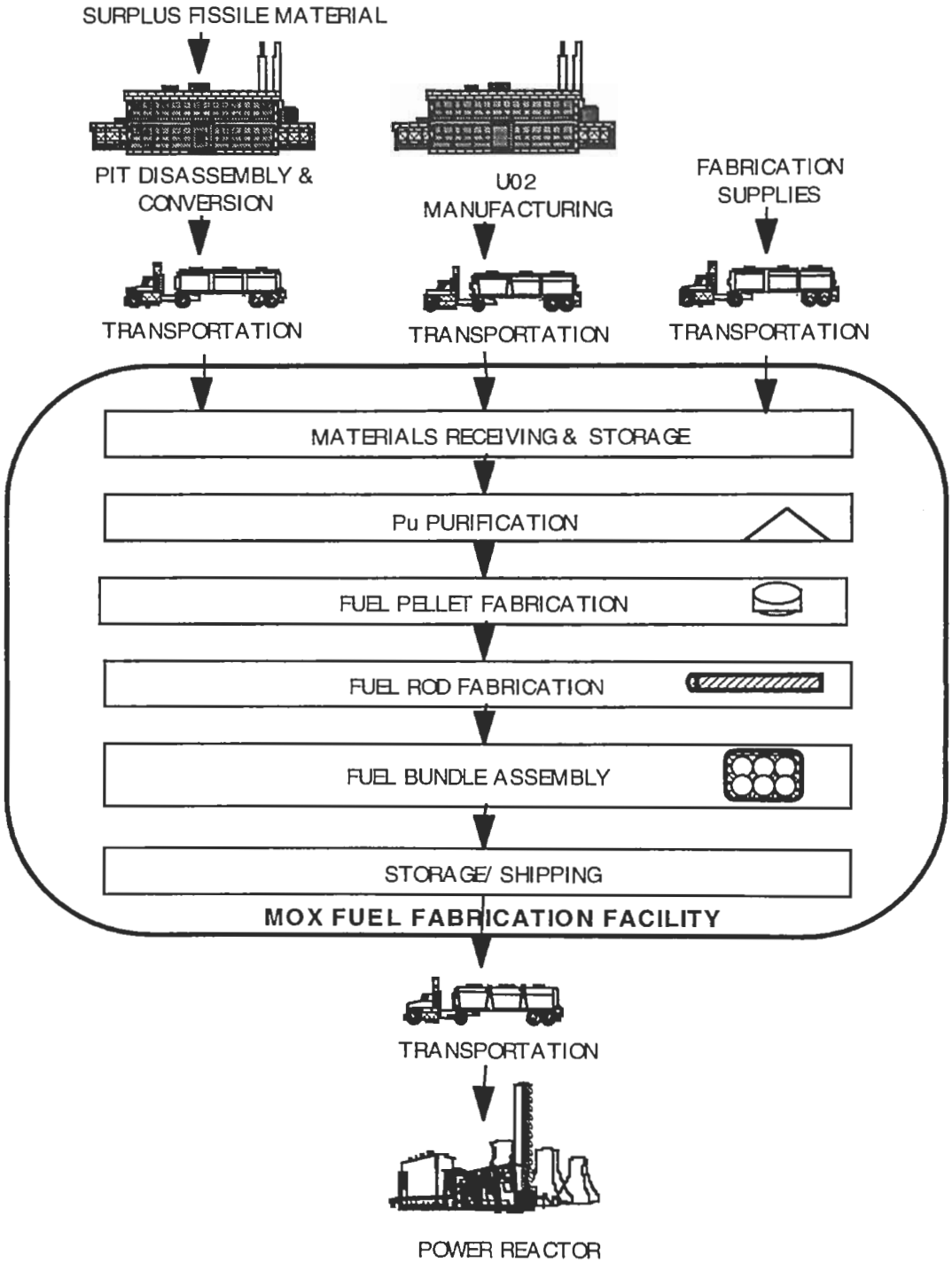

Fig. 2-1. Materials flow diagram.

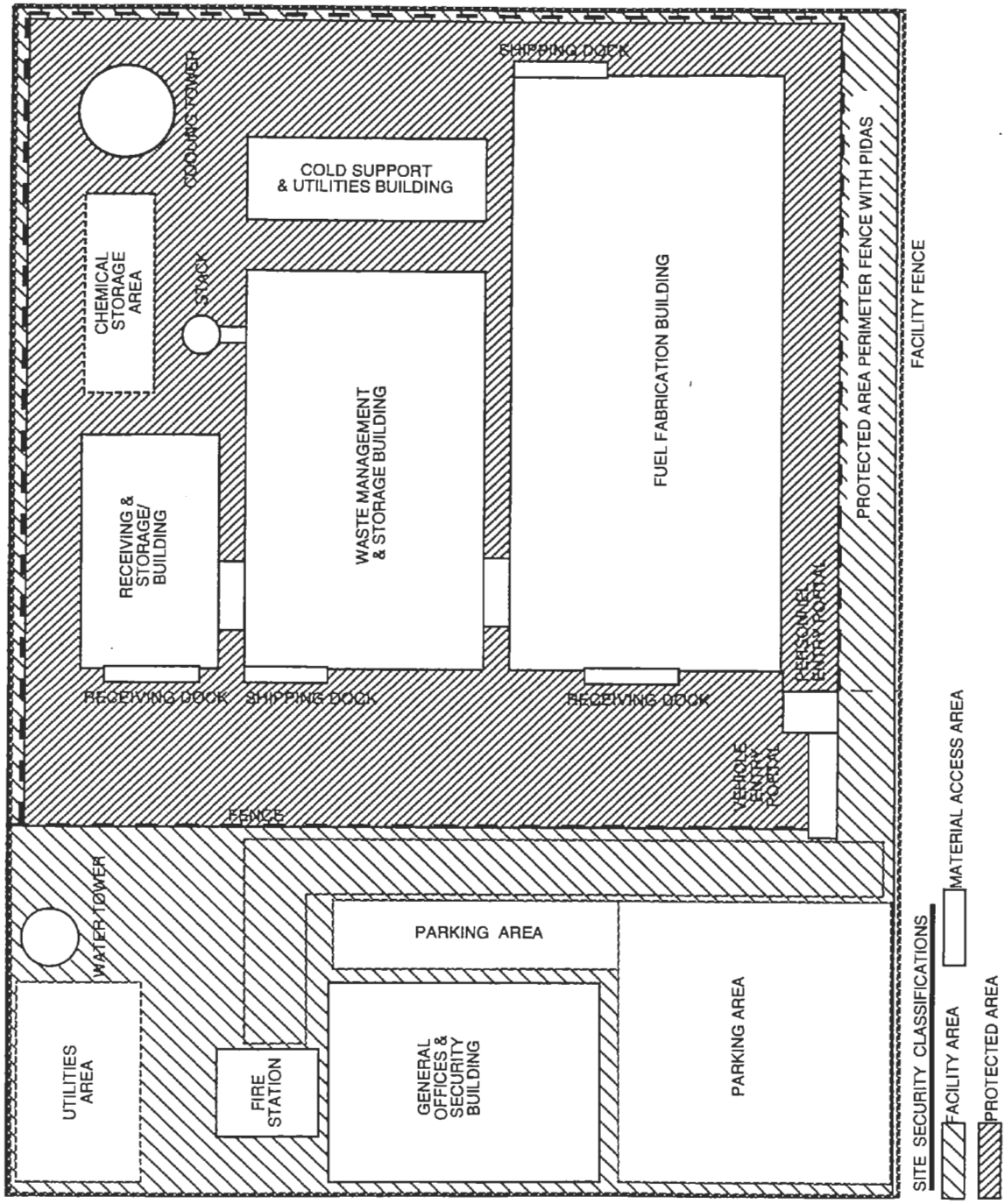

Fig. 2-2. Facility plot plan.

TABLE 2-1
FACILITY BUILDING DATA

Building Name	Footprint (ft^2)	Number of Levels	Special Materials	Construction Type
Materials Receiving and Storage	20,000	1	SNM	Type-1 FR, SC-1[a]
Fuel Fabrication	100,000	2	SNM	Type-1 FR, SC-1[a]
Waste Management	30,000	1	SNM	Type-1 FR, SC-1[a]
Cold Support and Utilities	15,000	1	None	Type-1 FR
General Administration and Security	30,000	1	None	Type-1 FR
Fire Station	5000	1	None	Type-1 FR

[a] Type-1 Fire Resistive, reinforced concrete, Safety Class-1 according to the Uniform Building Code.

2.1.3.3. Waste management building. The Waste Management Building will process, temporarily store, and ship all wastes generated by the MOX FFF. This will include all solid, liquid, contaminated, or uncontaminated wastes. The processes and handling areas will be segregated by waste form. All wastes will be controlled, and accountability will be provided. This building is considered to be an MAA.

2.1.3.4. Cold support and utilities building. The Cold Support and Utilities Building will handle heating, ventilation, and air conditioning (HVAC); electrical; water; and natural gas distribution for the Receiving and Storage, Waste Management, and Fuel Fabrication Buildings. It will also provide a machine shop and storage facilities for nonradioactive or uncontaminated activities. This building is considered to be a PA.

2.1.3.5. Chemical storage area. The Chemical Storage Area will provide space for chemical storage tanks that supply the buildings and processes in the Protected Area. This building is considered to be a PA.

2.1.3.6. General Administration and Security Building. The General Administration and Security Building provides office and support space for the site. This building is located within the facility area.

2.1.3.7. Fire station. The fire station provides augmented support to the site (in addition to local services) for immediate response to fire and medical emergencies. This building is located within the facility area.

2.1.3.8. Utilities area. The utilities area is the entrance and metering point for electrical, natural gas, and water supplies. The electrical substation, emergency generator(s), and associated switching equipment are located in this area. This building is located within the facility area.

2.2. Design Safety

The following sections identify some important safety considerations to be incorporated in the design of the facility. Performance goals commensurate with the associated hazard will be selected for all structures, systems, and components (SSCs). The term "hazard" is defined as a source of danger, whether external or internal. Natural phenomena such as earthquakes, extreme winds, tornadoes, and floods are external hazards to SSCs, whereas toxic, reactive, explosive, or radioactive materials contained within the facilities are internal hazards. The "usage category" will be established either by DOE or NRC Guidelines. Guidelines for Usage Category (Performance Category). The corresponding performance goals are given in Chapter 2 of UCRL-15910.

2.2.1. Earthquake. All new plant SSCs will be designed for earthquake generated ground accelerations in accordance with Design and Evaluation Guidelines for DOE Facilities Subjected to Natural Phenomena Hazards, UCRL-15910, with applicable seismic hazard exceedance probability of 2×10^{-3} for General Use (Performance Category 1), 1×10^{-3} for Low and Moderate Hazard (Performance Category 2 and 3), and 2×10^{-4} for High Hazard (Performance Category 4) SSCs.

Seismic design considerations for Performance Category 3 and 4 SSCs will include provisions for such SSCs to function as hazardous materials confinement barriers, and also for adequate anchorage of building contents to prevent their loss of critical function during an earthquake. In essence, design considerations avoid premature, unexpected loss of function, and maintain ductile behavior during earthquakes.

Characteristics of the lateral force design are as important as the magnitude of the earthquake load used for design. These characteristics include: (1) redundancy, (2) ductility, (3) combining of elements to behave as a unit, (4) adequate equipment anchorage, (5) consideration of the behavior of nonuniform, nonsymmetrical structures or equipment, (6) detailing of connections and reinforced concrete elements, and (7) the specified materials and construction.

In addition to structural safety, operation of emergency systems during and after an earthquake is essential. The fire protection system, emergency power, water supplies, and controls for safety class equipment are examples of plant systems that must be available following an earthquake. As stated in Chapter 4 of UCRL-15910 under Survival of Emergency systems, "earthquake-resistant design considerations extend beyond the dynamic response of structures and equipment to include

survival of systems that prevent facility damage or destruction due to fires or explosions."

2.2.2. Wind. All new plant SSCs will be designed for wind or tornado load criteria at specific DOE sites in accordance with UCRL-15910 and the corresponding facility usage and performance goals. Wind loads will be based on the annual probability of exceedance of 2×10^{-3} for General and Low Hazard (Performance Category 1 & 2), 1×10^{-3} for the Moderate Hazard (Performance Category 3), and 1×10^{-4} for the High Hazard (Performance Category 4) SSCs. The sites for which tornadoes are the viable wind hazards will be designed for the annual probability of exceedance of 2×10^{-5}, UCRL-15910.

Wind design criteria will be based on annual probability of exceedance, importance factor, missile criteria, and atmospheric pressure change as applicable to each performance (usage) category as specified in Table 5-2, UCRL-15910.

As stated in UCRL-15910, characteristic safety considerations will be reflected in the design of the system in that, "the main wind-force resisting system must be able to resist the wind loads without collapse or excessive deformation. The system must have sufficient ductility to permit relatively large deformations without sudden or catastrophic components of the system when some part is overlooked."

2.2.3. Flood. All facilities and buildings should preferably be located above the critical flood elevation (CFE) from the potential flood source (river, dam, levee, precipitation, etc.), or the site/facility will be hardened to mitigate the effects of the flood source such that performance goals are satisfied. Emergency operation plans will be developed to safely evacuate employees and secure areas with hazardous, mission dependent, or valuable materials. The extent of the flood hazard will be determined using the appropriate usage (performance) category for determining the "Annual Hazard Probability of Exceedance" 2×10^{-3} for General Use (Performance Category 1), 5×10^{-5} (Performance Category 2), 1×10^{-4} for Moderate Hazard (Performance Category 3), 1×10^{-5} for High Hazard (Performance Category 4) facility as defined in Chapter 6, UCRL-15910. For moderate and high hazard facilities located below the design basis flood level (DBFL) elevation, the design must be developed so that continued facility operation is provided.

The CFE will be determined by obtaining the appropriate DBFL. The DBFL is the peak hazard level (flow rate, depth of water, etc.) corresponding to mean "Annual Hazard Probability of Exceedance," or combinations of flood hazards (river flooding, wind-wave action, etc.) and corresponding loads associated with peak hazard level and applicable load combinations (hydrostatic and/or hydrodynamic forces, debris loads, etc.).

Site drainage must comply with the regulations of the governing local agency. The minimum design level for the Storm Water Management System is the 25-yr, 6-h storm, but potential effects of larger storms up to the 100-yr, 6-h storm will also be

considered. However, Storm Water Management systems must prevent the CFE from being exceeded. Accordingly, for some facilities, Storm Water Management Systems may have to be designed for more extreme storms.

Whenever possible, all facilities in performance categories above the General Use Category (Performance Category 1) will be constructed with the lowest floor of the structure, including subsurface floors, above the level of the 500-yr flood. This requirement can be met by siting and/or flood protection. Whenever possible, all facilities, including their basements in all performance categories, will be sited above the 100-yr flood plain (DOE 6430.1B, Section 1111-2.5.).

2.2.4. Fire Protection. The fire protection features for the plant and its associated support buildings will be in accordance with DOE Orders and the National Fire Protection Association Fire Codes and Standards.

Redundant fire water supplies and pumping capabilities (electric motor drivers with diesel backup) will be installed to supply the automatic and manual fire protection systems located throughout the site. One supply and one set of pumps will be designed to meet design basis event requirements. Appropriate types of fire protection systems will be installed to provide life safety, prevent large-loss fires, prevent production delay, ensure that fire does not cause an unacceptable on-site or off-site release of hazardous material that will threaten the public health and safety or the environment, and minimize the potential for the occurrence of a fire and related perils.

Specific production areas and/or equipment will be provided with the appropriate fire detection and suppression features as required with respect to the unique hazard characteristics of the product or process.

A fire hazards analysis will be performed to assess the risk from a fire within the individual fire areas of the facility.

All fire sprinkler water that has been discharged in process areas during and after a fire will be contained, monitored, sampled, treated in the process wastewater treatment plant, and disposed of.

2.2.5. Safety Class Instrumentation and Control. The safety classification of the instrumentation and controls will be derived from the safety functions performed. This safety classification is based on DOE 6430.1B and DOE 5481.1B.

Safety class instrumentation will be designed to monitor identified safety related variables in safety class systems and equipment over expected ranges for normal operation, accident conditions, and for safe shutdown. Safety class controls will be provided, when required, to control these variables.

Suitable redundancy and diversity will be used when designing safety class systems to ensure that safety functions can be completed, when required, and that a single point failure will not cause loss of protective functions. Redundant safety class signals must also be physically protected or separated to prevent a common event from causing a complete failure of the redundant signals. Standards IEEE 379 and IEEE 384 are the design basis for redundancy and separation criteria. Safety class instrumentation will be designed to fail in a safe mode following a component or channel failure. Safety class uninterruptible power will be provided when appropriate.

2.2.6. Nuclear Criticality. Where potential for nuclear criticality exists, the design of the plant will include the basic controls for assuring nuclear criticality safety. Designs will satisfy the double contingency principle, i.e., "process designs will incorporate sufficient safety factors so that at least two unlikely, independent, and concurrent changes in process conditions must occur before a criticality accident is possible," from DOE 6430.1B. Basic control methods for the prevention of nuclear criticality include:

1. provision of safe geometry (preferred),
2. engineered density and/or mass limitation,
3. provision of fixed neutron absorbers,
4. provision of soluble neutron absorbers, and
5. use of administrative controls.

Although geometric controls are used extensively wherever practical, there are cases where geometric control alone cannot practically provide assurance of criticality safety. In these cases, engineered controls can be used to control moderation, nuclear poisons, mass, and density.

2.2.7. Ventilation. The HVAC system design for the new facility will meet all general design requirements in accordance with DOE 6430.1B, Section 1550, and ASHRAE guides.

The HVAC system provides environmental conditions for the health and comfort of personnel and for equipment protection. Typically, the ventilation system will be designed to maintain confinement to preclude the spread of airborne radioactive particulates or hazardous chemicals within the facilities and to the outside environment.

The design includes engineered safety features to prevent or mitigate the potential consequences of postulated design basis events. Suitable redundancy and diversity will be used when designing the ventilation system to ensure that the mitigation of design basis events can be completed, when required, and that a single point failure will not cause loss of protective functions. Multiple barriers are used to limit release of plutonium from the facility manufacturing building. These include both a series of structural barriers to form zones or areas, and zoned ventilation systems. Primary

confinement is provided in Restricted Access Areas (RAA) by process enclosures such as shielded gloveboxes or hot cells where the plutonium handling equipment is located. Outside the RAA there may be an area used for operation and maintenance, designated as Limited Access Area (LAA), which serves to contain any leakage of contamination from the RAA. The limited access barrier forms a fire and shielding wall. The final confinement is provided by the building walls, which enclose the Normal Access Areas (NAA).

Pressure differentials are maintained between areas so that air flows from noncontaminated areas into areas of potentially higher contamination levels, where pressure RAA < pressure LAA < pressure NAA < atmospheric pressure. Differentials are maintained by automatically controlled zone ventilation systems that are equipped with redundant, independent emergency power supplies.

Gas (probably nitrogen) in the gloveboxes and in the glovebox gas supply and exhaust gas system comprise Zone 1. Air in the process rooms external to the gloveboxes is monitored continuously for airborne contamination. Gas at the exit of Zone 1 filtration is also monitored continuously for contamination, and a high level of radioactivity in the Zone 1 exhaust is cause for Zone 1 shutdown and facility evacuation. Loss of Zone 1 flow or negative pressure is cause for immediate facility shutdown.

The model facility exhausts process air through a minimum of three high efficiency particulate air (HEPA) filters, with the first HEPA filter usually located on the glovebox. The two final stages have an in-place test capability.

2.2.8. Confinement and Containment. Confinement and containment of nuclear material will be provided for the Fuel Fabrication Building by the building structure and the ventilation system. This confinement system includes the entire external structure and the ventilation system.

The Fuel Fabrication Building will be designed and constructed to withstand the forces of a Design Basis Earthquake (DBE) and all postulated facility accidents without building failure or significant cracking. Because of this design approach, confinement can be considered to be provided by the seismically qualified building and ventilation systems that isolates the building from the environment in emergency situations. Primary confinement is provided by the glovebox system and the associated zone air handling system. Operations involving nuclear material are carried out within the gloveboxes in the building.

All gloveboxes will be standardized in single or multiple sections whenever possible. Standard connectors on each end of a glovebox provide changing glovebox trains while minimizing contamination. Standard gloveboxes will have lead encased in the walls to shield operating personnel from exposure to gamma rays.

The interior of the gloveboxes will have a smooth finish with no cracks or crevices and all welds will be ground smooth to blend with the surrounding metal. The window, glove port penetrations, and air lock closures will limit leakage through the seals to a level that is consistent with process requirements. Gloveboxes will be made of stainless steel, and all parts inside the box will be easily accessible. The support structure of the boxes will be designed to meet Class 1 seismic criteria.

Glovebox trains will be separated from each other and from conveyors by gravity operated fire dampers. Dampers separating the glovebox lines from the conveyor system normally will be open. A heat sensing system (which will cause the breaking of a fusible link) will close the damper automatically in case of a fire.

Glovebox ports for gloves will be welded into the glovebox. Gloves will be made of a material appropriate to their usage, usually a lead-laminated rubber composite. Windows will be made of laminated safety glass with leaded glass installed on the outside, as required. Window size will be minimized. All window seal gaskets will have a metal fire shield on the inside of the box to retard burnout and keep the window in place if the gasket is lost. Gloves and windows will be designed for replacement without the possibility of spreading contamination.

2.3. Safeguards and Security (S&S)

2.3.1. Introduction. This section addresses issues relevant to the protection of SNM in a MOX fuel fabrication process. Protection of nuclear material requires an integrated program involving both material control and accountability (MC&A), and physical security. S&S systems will be designed to meet DOE, NRC, and, as applicable, IAEA requirements. The effectiveness of the final S&S program will be evaluated by the performance of site specific VAs.

DOE requires facilities to be protected against a range of threats including theft or diversion of SNM; industrial, radiological, and toxicological sabotage; loss or theft of classified information or matter; and espionage. Protection requirements for theft or diversion of SNM are based on the attractiveness of the material for use in constructing a nuclear explosive device. Sabotage protection requirements are based on possible adverse impacts on national security, or on the health and safety of facility employees, the public, or the environment.

S&S combines physical protection, material control and accountability, and personnel assurance. Experience has shown that incorporating S&S measures into early facility designs and integrating them into facility operations provide S&S that are more effective, more economical, and less intrusive. Because of increased concerns about nuclear proliferation, public awareness, and the uniqueness of these plutonium processing facilities, S&S systems will be required to meet the highest standards of performance and compliance.

The MOX FFF accepts surplus fissile material in oxide form and produces MOX fuel for power reactors. The SNM quantities on inventories and attractiveness levels for the facility will exceed the threshold for a Category I nuclear facility as defined in DOE Order 5633.3B. Thus, the fabrication facility S&S systems must be designed to meet Category I protection requirements.

2.3.2. Physical Protection. Physical protection of facilities includes protection in depth (several layers of protective measures providing detection, delay, and response), balanced protection (nearly equal detection and delay on all possible adversary paths to similar targets), graded protection (response commensurate with the asset being protected), and reliability (minimal susceptibility to single point failures and low maintenance requirements). The physical protection system will use proven S&S systems and components that have been validated at other facilities or test programs and still allow for future technology advances. Technology will minimize the cost of protective force personnel. The protection system and facility operations will provide compartmentalization of the facility to minimize personnel access to potential targets of malevolent acts. Compartmentalization will also be applied to minimize areas where classified information can be derived.

Protection planning will be based on relevant DOE/NRC/IAEA requirements and a site specific VA. The VA will identify the appropriate levels of protection for each potential type of material against each potential type of adversary and threat (e.g., theft or sabotage, as defined in the DOE Design Basis Threat guidance). Material will be protected while in storage, in process, and in transit.

2.3.2.1. Personnel security measures. Personnel security measures will include the appropriate access authorizations for employees. Personnel meeting established security criteria will also be required to enroll in human reliability programs [e.g., Personal Assurance Program (PAP) and Personal Security Assurance Program (PSAP)].

2.3.2.2. Barriers and access control systems. An important part of the physical protection system of the facility will be barriers that impede, delay, or in some cases deny access to nuclear material. Delay levels will be determined by barrier technology data and/or the conduct of vulnerability assessment performance testing. Barriers will consist of concentric layers of graded protection and defense-in-depth measures. Types of passive barriers include fencing, hardened walls, vault doors, locking systems, and geologic formations. Active barriers may include dispersed foam and smoke.

Clearly defined physical barriers such as fences, walls, and doors will be used to control, impede, or deny access to the PA. The PA perimeter, which will contain the fabrication facility, will be defined by two 8-ft security fences, separated by a 30-ft clear zone that contains the PIDAS.

All pedestrian and vehicular traffic will be controlled through an entry post. The entry post will be designed for inspection and search of personnel, hand carried items, and vehicles. Each personnel entry portal will have badge readers, a portal metal detector (for entry), nuclear material portal detectors (for exit), a package x-ray system, and space for security inspectors to perform hand searches of packages suspected of containing prohibited articles. The vehicle portal will be equipped with vehicle traps and SNM monitors.

The terrain surrounding the facility perimeter will be modified to prevent vehicles from ramming into it. At those areas where vehicles can access the PA perimeter, barriers will be installed to preclude ramming. Guidance on these types of installations will be taken from the Sandia National Laboratories *Barrier Technology Handbook*.

Category I quantities of SNM in storage or in process must be contained within an MAA, which is within a PA. Category I SNM must be stored in vaults or vault-type rooms that meet the requirements of DOE Order 6430.1A.

The receiving and storage, fuel fabrication, and waste management buildings will be contained within an MAA. This MAA will be contained within the facility PA, and the exterior walls will be constructed to the specifications of a SNM vault. All personnel entering the MAA will be channeled though an entry post, under security police officer control. The entry post will contain portal metal detectors and portal SNM monitors. Vehicular traffic will not be permitted to enter the MAA.

2.3.2.3. Detection and alarm systems. A detection system will be installed (using up-to-date technology) at all PA/MAA boundaries, vaults, and vault-like rooms to signal attempted intrusion, unauthorized attempt at access, or other anomalous situations. This detection system will include access control facilities at each portal, where the identity of each employee is verified. A computerized entry control system will maintain a real time record of all persons present in the PA and MAA (see 2.3.2.1). Any alarm anomaly will be displayed on a console in the central alarm station (CAS). Security personnel will direct an appropriate response.

The following criteria will be applied to the selection and deployment of alarm systems: (1) required probability of detection and false alarm rates, (2) circuitry to detect tampering with sensors, wiring, or other system components, (3) backup electrical power when site power is lost, (4) wiring and system component placement to be contained inside the PA, (5) use of suitable conduit and tamper-protected enclosures for alarm wiring, and (6) the ability to test detection sensors.

All electronic detection systems will meet site-specific protection needs and the following requirements: (1) all detection/alarm devices will be connected to monitor or display panels in the central alarm station, (2) exterior sensors that serve as the primary means of detection at the PA perimeter will provide reasonable assurance in detecting penetration of the perimeter, (3) the system, including

transmission lines, will be failure and tamper indicating in both the access and secure modes, (4) the system transmission lines will be continuously supervised, and (5) the system will have a primary and auxiliary power source.

The PIDAS will consist of the latest technology recommended by Sandia National Laboratories for this type of facility in the appropriate climate and geography.

2.3.2.4. Assessment systems. Upon receipt of an alarm or detection of an intrusion, the nature of the threat will be evaluated and an appropriate response initiated. In general, the special rapid response team will be activated. Further assessment of the alarm may be accomplished prior to the arrival of the rapid response team.

2.3.2.5. Communication systems. All security police officers will be equipped with transceivers equipped with digital encryption systems for two-way communications. The CAS will be substantially constructed to provide the required protection to personnel and communications equipment. The communications equipment is tested on a continual basis through regular use, and though hourly communication checks. All security police officers at fixed positions will have normal telephone services and two-way communications with other fixed stations. In the case of catastrophic power failure (normal and backup), the central guard station will have communications with local police departments.

2.3.2.6. Response systems. The primary and first response to an overt intrusion or attempt at theft or sabotage of nuclear material will be by facility security police officers. If the MAA is the source of the alarm, the special rapid response team will assist onsite officers. All security posts will be equipped with duress alarms and located in accordance with the latest DOE orders.

2.3.2.7. Lighting systems. The perimeter lighting will comply with the latest DOE orders (5632.7 series) and will be compatible with both visual observation by security police officers and an event-actuated closed circuit television system (CCTV). The perimeter lighting will be powered by commercial power with backup power from a back-up generator.

2.3.2.8. Protective force. Protective force staffing levels and operational capabilities will be sufficient to neutralize the DOE postulated adversary threats. Detection levels will be determined by intrusion detection performance data and/or the conduct of vulnerability assessment performance testing. These personnel will be subject to appropriate human reliability programs (e.g., PAP and PSAP).

2.3.3. Nuclear Material Control and Accountability. The nuclear MC&A system for the MOX FFF will be a single integrated system of accountability measurements and material control measures to monitor storage, processing, and transfers (compliance requirements from DOE Order 5633.3B). The system will be a computerized database management system employing double entry accounting.

The system will have the capability for recording external receipts and shipments, and internal transfers between and within Material Balance Areas (MBAs). The record system will categorize nuclear material by material type, composition, and location. The system must be capable of tracking nuclear material throughout the facility, including each of the processes used to perform fabrication activities. The system must be capable of locating items by specific storage locations for material in storage.

As appropriate, the MC&A system will be designed and implemented to be closely associated with process control, access control, and criticality safety. Material control measures will govern all movement, processing, and access to SNM. Backup systems will be incorporated so that a single failure will not compromise this monitoring and detection capability. The accounting system will provide timely information for the location and quantities of all nuclear material in the facility at any time, and will be designed to detect abrupt or protracted thefts or diversions. The system will provide a means of physically accounting for the disposition of nuclear material.

2.3.3.1. Nuclear material control systems. The facility will have an MC&A Custodian whose responsibilities will include evaluating MC&A anomalies. The material control systems that will be evaluated by the MC&A Custodian include measurement control charts, daily checks on the nuclear material (Daily Administrative Checks), and material in-process reports. Personnel who detect or suspect missing nuclear material or unauthorized activities are required to report the situation immediately.

The outer boundary of the MAA is defined as the perimeter walls of the buildings containing the operations with SNM. The MAA will be apportioned into material balance areas predicated on operating procedures, physical configuration of laboratories or processing equipment, and assay capabilities. The MBA structure is designed to optimize control of nuclear materials.

The objective of the MAA boundary is to prevent or detect the unauthorized movement of material though it, while allowing access for authorized personnel, authorized material movement, and emergency evacuation, as necessary. Nuclear material will be transferred into and out of the MAA at well defined locations and will be subject to specific procedures that prevent unauthorized transfers.

The MAA boundary will be designed to incorporate emergency exits in compliance with Life Safety Codes.

Material awaiting processing will be stored in a graded system with appropriate access controls. The facility will have a vault for nuclear material awaiting processing. Vault activities will be subject to strict material surveillance procedures. All personnel movement into and out of the vault will be controlled by access procedures. During nonworking hours the vault will be secured and alarmed.

Process equipment, such as glove box lines, often provides a natural barrier to the theft and diversion of nuclear material. This equipment will be used to supplement other safeguards and security measures.

Two person rule and/or electronic surveillance systems such as CCTV will be implemented when required for use in sensitive areas such as loadout stations, transfer locations, and outside doors.

A tamper indicating device program will be documented and implemented. The design of MAA doors, vault doors, vault racks, and material containers will include seal mechanisms.

2.3.3.2. Material Accountability Program. The Facility accountability program will include an accounting system, a measurement and measurement control program, physical inventory programs, a material transfer program, and a program to assess material control indicators.

The accounting system will be a near real time accounting system. This system will require the prompt reporting of any change to the nuclear material accountable quantity, location, user, and form. The nuclear material inventory will be maintained on a computerized database. Configuration of the database will allow users, custodians, and oversight groups to efficiently and accurately assess the status of all accountable nuclear material items in the MAA.

The MC&A computer system will be located in a security area within the PA and will be operated under physical and administrative controls described in an approved Automatic Data Processing Security Plan. Access to the computer system must be restricted through physical, administrative, and password controls. Control over software must be provided through physical software protection and a change control system.

MC&A data is protected at the highest classification level for data in the system. Access to MC&A data is also limited on a need-to-know basis. MC&A data stored on the computer system must be backed up daily to supplementary disk files that are stored in a separate location. Data and reports are retained in accordance with DOE directive requirements.

Space and equipment will be provided for performing accountability measurements. Quantities of SNM on inventory and involved in external/internal transfers are verified and/or confirmed through standardized measurement, sampling, and analytical techniques. The same techniques are used in the performance of plant physical inventories. Various measurement methods are employed, depending upon the type and form of the material and the purpose of the measurement. Measurements performed for accountability in the fabrication facility may include mass, nondestructive analysis (NDA), and destructive (chemical) analysis.

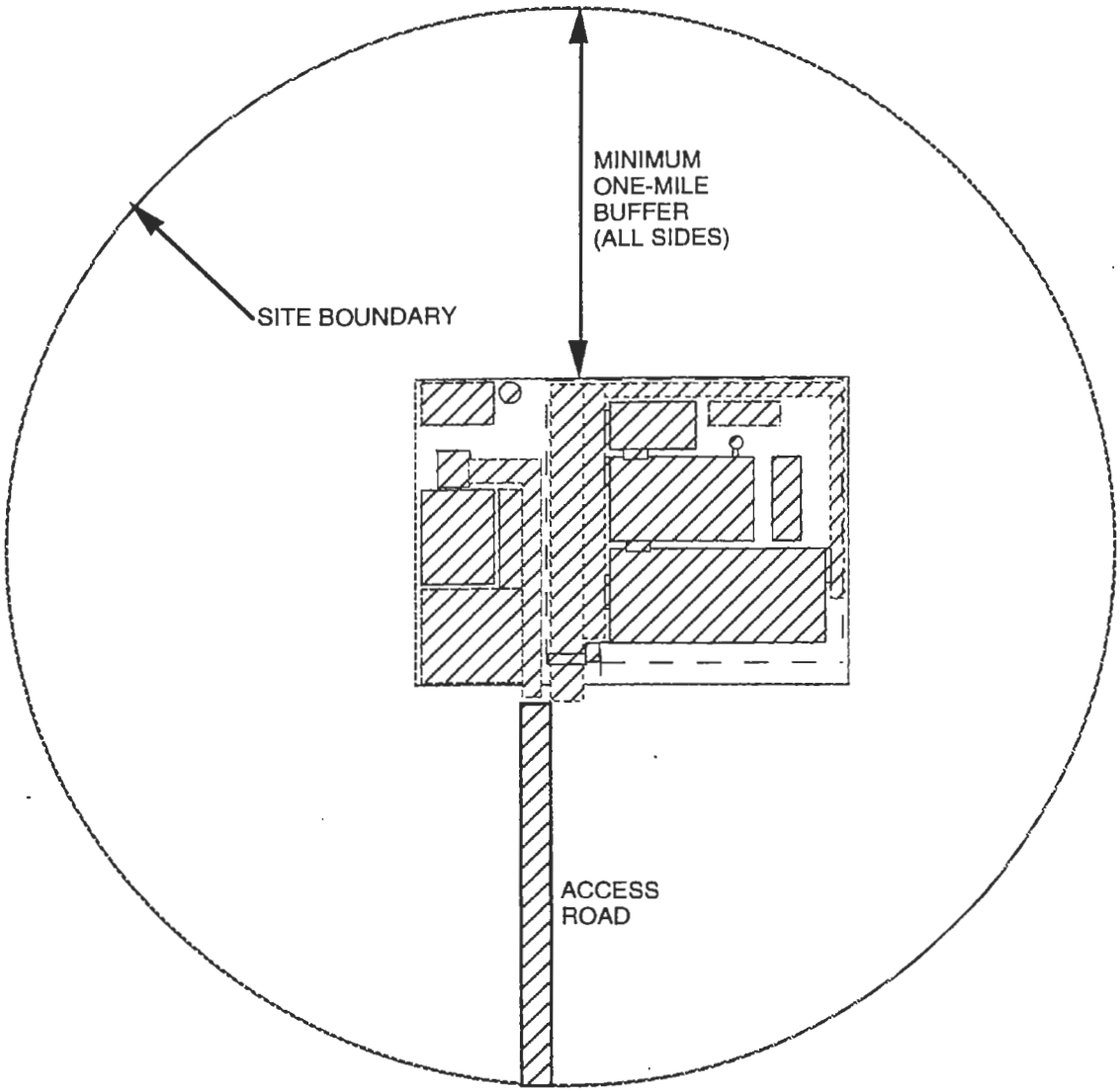

Fig. 3-1. New MOX FFF site map.

3.2. Land Area Requirements

Approximately 2200 acres of land will be required during operation. This includes the facility and at least a 1-mile-wide buffer zone. During operation, only 200 acres of land will be disturbed. This estimate includes land for the MOX FFF, support facilities, roads, and parking lots.

3.3. Land Area Requirements during Construction.

During construction, 300 acres of land will be disturbed, including the 200 acres discussed above.

4.0. PROCESS DESCRIPTIONS

Fuel fabrication has been divided into the 8 different processes listed below.

1. Materials receiving and storage
2. Plutonium oxide purification
3. Feed material preparation
4. Fuel pellet fabrication
5. Fuel rod fabrication
6. Fuel bundle assembly
7. Materials recycle
8. Waste management

The fuel fabrication process consists of the purification and conditioning of PuO_2 that does not meet specifications; blending of PuO_2 and UO_2; fabrication of fuel pellets, loading of fuel rods; assembly of fuel bundles; recycling plutonium-bearing scrap and materials from pellets, rods, and bundles that do not meet requirements; and management of wastes generated throughout the fuel fabrication process.

The overall fuel fabrication process flow diagram is shown in Fig. 4-1. More detail is shown in flow diagrams for each of the 8 processes.

4.1. Materials Receiving and Storage

4.1.1. Materials Receiving and Storage: Function. In the materials receiving and storage process, all important fuel fabrication supplies are received, inspected and sampled; accountability established; and the materials stored, observing criticality controls on plutonium and surrounding materials. There are several in-process storage locations distributed throughout the 8 processes. Figure 4-2 shows the process flow diagram of the processes described above.

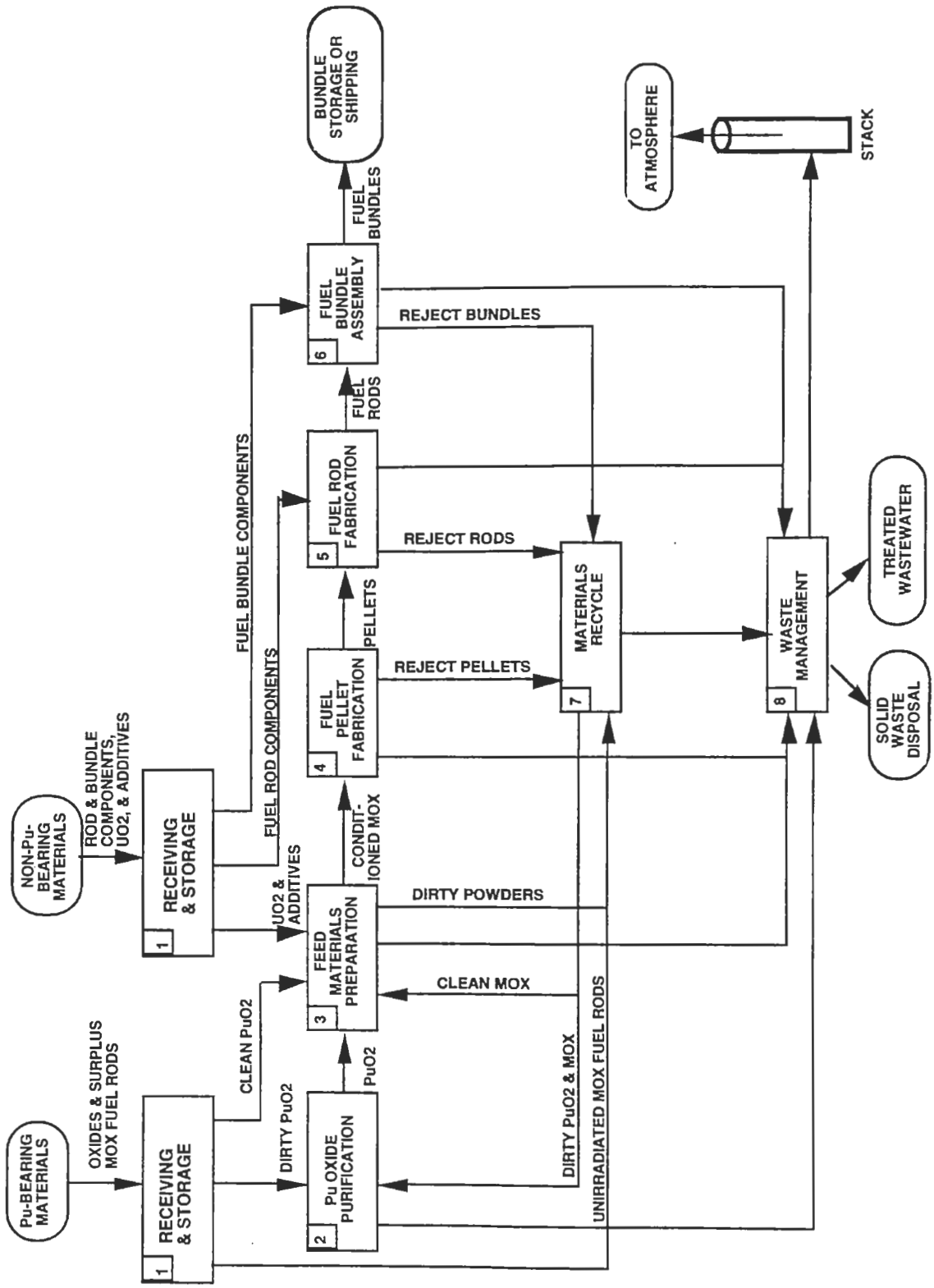

Fig. 4-1. MOX fabrication overall process flow diagram.

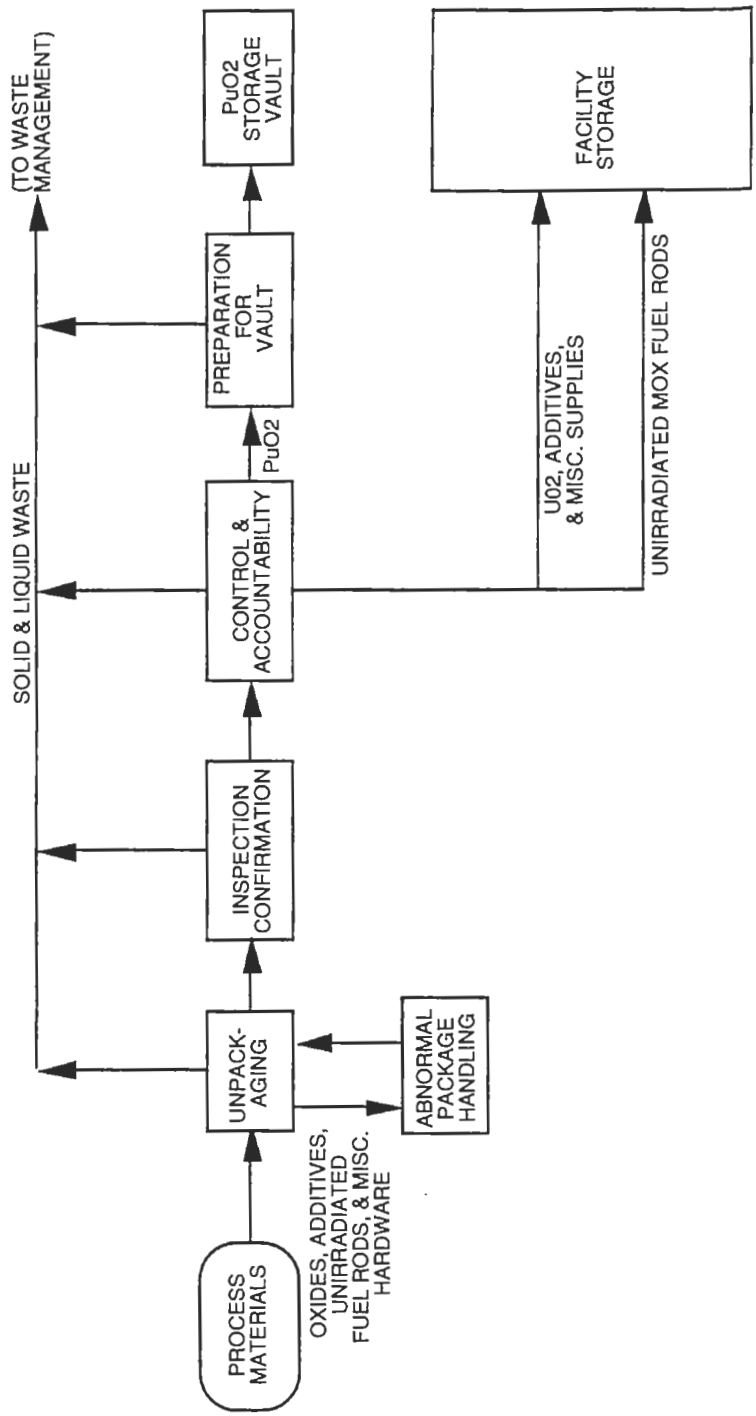

Fig. 4-2. Receiving and storage process flow diagram.

4.1.2. Materials Receiving and Storage: Feeds. Feed materials include: (1) PuO_2 (impure and clean), (2) UO_2 from natural or depleted uranium, (3) depletable neutron absorbers, (4) depletable neutron absorber rods, (5) other miscellaneous materials such as lubricants used in pressing pellets, (6) process gases, and (7) fuel pin and bundle hardware. Also, chemicals used in analyses of materials for treating and recycling wastes, for purifying PuO_2, and cleaning solvents for finished rods and bundles are received and stored. The PuO_2 is stored in a vault.

4.1.3. Materials Receiving and Storage: Products. Process materials are stored properly and inspected to assure that they meet specifications. Appropriate steps are taken to ensure the security of plutonium oxide, and compliance with criticality requirements. Damaged or rejected materials are held pending final disposition.

4.1.4. Materials Receiving and Storage: Utilities Required. Utilities required for the process are electricity for lighting, instrumentation, MC&A equipment computers, bar code readers, ventilation, and powered equipment such as cranes, movable racks, forklifts, and sanitary and potable water.

4.1.5. Materials Receiving and Storage: Chemicals Required. No chemicals are required other than the materials themselves.

4.1.6. Materials Receiving and Storage: Special Requirements. The primary objectives of receiving and storage are that the materials be stored in a safe manner and in accordance with appropriate guidelines; that criticality safeguards be adhered to rigidly; and that appropriate measures be taken to guard against diversion of plutonium to unauthorized use. In addition, required MC&A measurements will be adhered to for SNM, and all materials will be procured, received, inspected, and stored in accordance with strict QA practices and requirements. ALARA principles will be adhered to for the protection of storage area workers.

4.1.7. Materials Receiving and Storage: Wastes Generated. Only office, sanitary and packaging wastes are generated.

4.2. PuO_2 Purification

4.2.1. PuO_2 Purification: Function. In this process, PuO_2 is purified to the specifications for the production of MOX fuel rods required for the reactor option chosen. Feed PuO_2 powder is analyzed for contamination and, if it meets purity requirements, goes to PuO_2 storage without further processing. PuO_2 that does not meet the purity requirements is dissolved, and the Pu solution is processed through an ion exchange process to separate the Pu from other components. It is then treated to precipitate the Pu and then filtered and calcined to PuO_2 powder. After analysis, PuO_2 meeting purity requirements is sent to PuO_2 storage. Oxide that still does not meet purity requirements is recycled back through the process. See Fig. 4-3 for a flow diagram of this process. Process waste is sent to the waste management process.

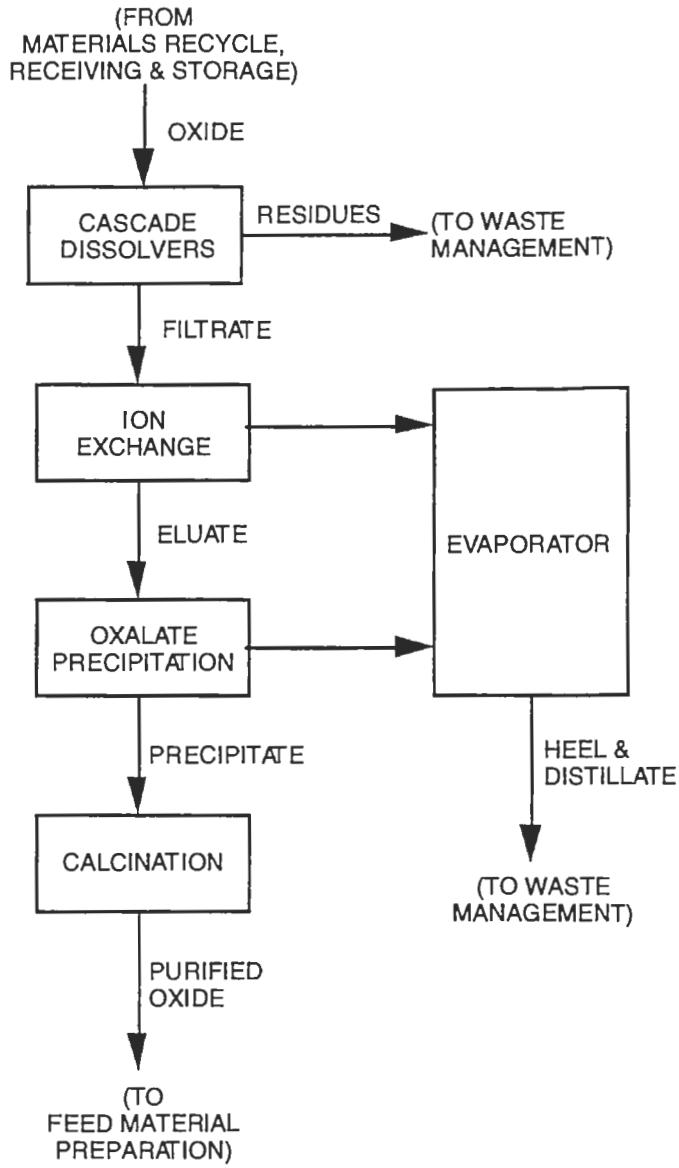

Fig. 4-3. PuO_2 purification process flow diagram.

4.2.2. PuO_2 Purification: Feeds. The feeds to this process are plutonium oxide, nitric, hydrofluoric and oxalic acids, hydroxyl amine, and sodium nitrite.

4.2.3. PuO_2 Purification: Products. The product is PuO_2 powder that meets purity requirements.

4.2.4. PuO_2 Purification: Utilities Required. Utilities used for this process are electricity for lighting, instrumentation, MC&A equipment, ventilation, gas control through the glovebox(es), powering process equipment, process heating, process, sanitary, and potable water.

4.2.5. PuO_2 Purification: Chemicals Required. Chemicals required in this process include nitric, hydrofluoric, and oxalic acid; hydroxyl amine; and sodium nitrite.

4.2.6. PuO_2 Purification: Special Requirements. The primary requirements related to purification are that the materials be stored and processed in a safe manner and in accordance with appropriate guidelines, that criticality safeguards be adhered to rigidly, and that appropriate measures be taken to guard against diversion of plutonium for unauthorized use. Care must be taken to guard against contamination and radiation. ALARA principles will be adhered to for protection of workers in the process areas.

4.2.7. PuO_2 Purification: Wastes Generated. Generated wastes include used acid solution containing impurities removed in purification; contaminated operator's clothing, such as gloves, wipes and shoe covers; used ventilation system filters; used analytical chemicals; contaminated hardware such as pH meter probes, crucibles, vials, and pipettes; and gaseous effluent from the calciner.

4.3. Feed Materials Preparation

4.3.1. Feed Materials Preparation: Function. PuO_2 from receiving and storage, or the materials recycle process, is milled and screened to specification in batch lots. Any oxide not meeting specifications is recycled through milling. Several lots are then blended together to ensure consistency through extended periods of production. (Note: special blending may be necessary because purified plutonium will contain much less gallium than PuO_2 made directly from pit metal. Also, special blending may be necessary because of varying plutonium isotope composition from different sources.) The PuO_2 is then stored until needed.

Uranium oxide is received from off site in a ready-to-use condition and is stored for later use.

As needed, UO_2, PuO_2, recycled MOX (see Material Recycle, Sec. 4.7), and depletable neutron absorber are removed from storage and placed in feed bins. Some of each is weighed out in proper proportions to form a batch and is placed in a mill/blender combination to accomplish homogeneity. Portions from several batches are separated out, cross blended, and then reblended by passing through the mill/blender again to form a large lot. The powder is agglomerated to form it into a free-flowing press feed and is placed into storage. One variation would be to include coblending depletable neutron absorber with the fuel mix. Batch size is determined by criticality safety limits on mass, but uniformity over much larger process units is desired to minimize sampling and optimize product consistency.

All operations are performed in gloveboxes. These processes are depicted in Fig. 4-4. Milling is the standard method for reducing powder to a specified particle size distribution. Blending is a necessary process to mix different powders together and to ensure uniform distribution (homogeneity) of plutonium in the finished fuel. Both operations have been used for many years in fabrication of standard fuels for American reactors, and for the manufacture of MOX fuels overseas. The primary hazard is loss of confinement of the powder due to malfunction of the ventilation system and/or dispersion due to some sort of fire or explosion.

4.3.2. Feed Materials Preparation: Feeds. Feeds for this process include PuO_2, UO_2, depletable neutron absorbers (if required), and other additives such as lubricants (for pressing).

4.3.3. Feed Materials Preparation: Products. The products are batches of MOX granules in proper proportions ready for fabrication of finished pellets.

4.3.4. Feed Materials Preparation: Utilities Required. Utilities used in this process include electricity for lighting, instrumentation, MC&A equipment, ventilation and gas control through the glovebox(es); electricity to power feeders, milling, blending, and agglomeration equipment; and sanitary and potable water.

4.3.5. Feed Materials Preparation: Chemicals Required. Chemicals that may be required in this process include oxalic acid and zinc stearate for pressing lubricants.

4.3.6. Feed Materials Preparation: Special Requirements. Processing and storage must observe strict criticality controls, safeguards against diversion of plutonium, controls designed to preclude any ingestion of plutonium powder, and any other applicable guidelines.

4.3.7. Feed Materials Preparation: Wastes Generated. Wastes generated by this process include contaminated gloveboxes, milling machines, and powder storage containers; other waste including contaminated operator clothing such as gloves, wipes, and shoe covers; used ventilation system filters; hydraulic oil from agglomerators; worn-out milling media; and used analysis chemicals. Oxides swept

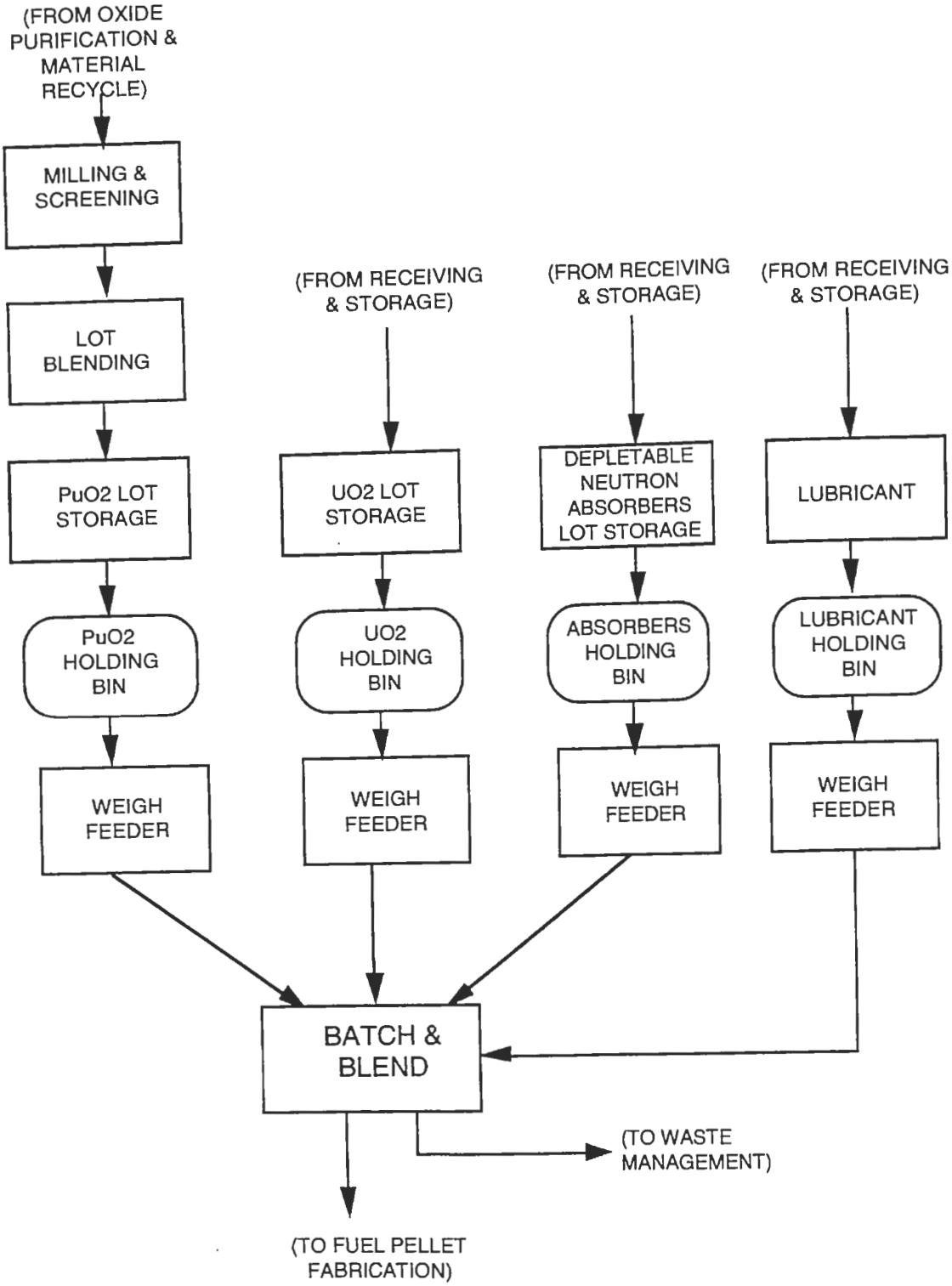

Fig. 4-4. Feed material preparation process flow diagram.

off glovebox floors will consist of reject plutonium and uranium oxides, with impurities such as depletable absorbers, brush hair, lint from wipes, and oil.

4.4. Fuel Pellet Fabrication

4.4.1. Fuel Pellet Fabrication: Function. The process for fabricating fuel pellets is to receive conditioned MOX feed from either storage or the feed materials preparation process, to press the pellets, to load the pellets into sintering boats, and to store them until needed. Reject pellets are sent to materials recycle. After pressing, all storage is from in-line surge capacity between process steps and is not a separate storage location. After the boats are placed in the sintering furnace, they are sintered in an argon (or nitrogen) and 6% hydrogen atmosphere (to control the oxygen-to-metal ratio). The pellets are removed from the furnace, inspected for conformance to dimensions, density, homogeneity and stoichiometry requirements, and are held in in-line storage until needed. Rejected pellets are sent to be recycled. Sintered pellets are then ground to dimension and are inspected for dimensional conformance, purity, and fissile content. Unacceptable pellets are sent to be recycled. One variation would be to coat the pellets with depletable neutron absorbers if these are not to be included in the fuel mix. Acceptable pellets are placed in storage until needed. All operations except sintering are performed in gloveboxes. This process is depicted in Fig. 4-5. This process for fabricating fuel pellets has been in use for over 30 years. Any problems will, in all likelihood, be related to the purity of the plutonium feed materials. Another potential uncertainty lies in the behavior of gallium. Future research will assess the impact of gallium on fabrication.

4.4.2. Fuel Pellet Fabrication: Feeds. Feeds for this process include fuel batch mixtures.

4.4.3. Fuel Pellet Fabrication: Products. The products are finished fuel pellets that are ready for loading into fuel pins.

4.4.4. Fuel Pellet Fabrication: Utilities Required. Utilities used in this process include electricity for lighting, instrumentation, MC&A equipment, ventilation and gas control through the glovebox(es); electricity for powering presses, grinders and furnaces; sanitary and potable water; and industrial cooling water for the sintering furnaces. Presses and furnaces consume significant amounts of power and produce large amounts of waste heat that must be rejected by an onsite cooling tower.

4.4.5. Fuel Pellet Fabrication: Chemicals Required. Chemicals required in this process, other than feed materials, are argon or nitrogen and hydrogen gases for the sintering furnace atmosphere, and oxalic acid and zinc stearate for pressing lubricants. The pellet characterization methods such as purity analyses and metalography (grinding and polishing fluids) require small amounts of many chemicals.

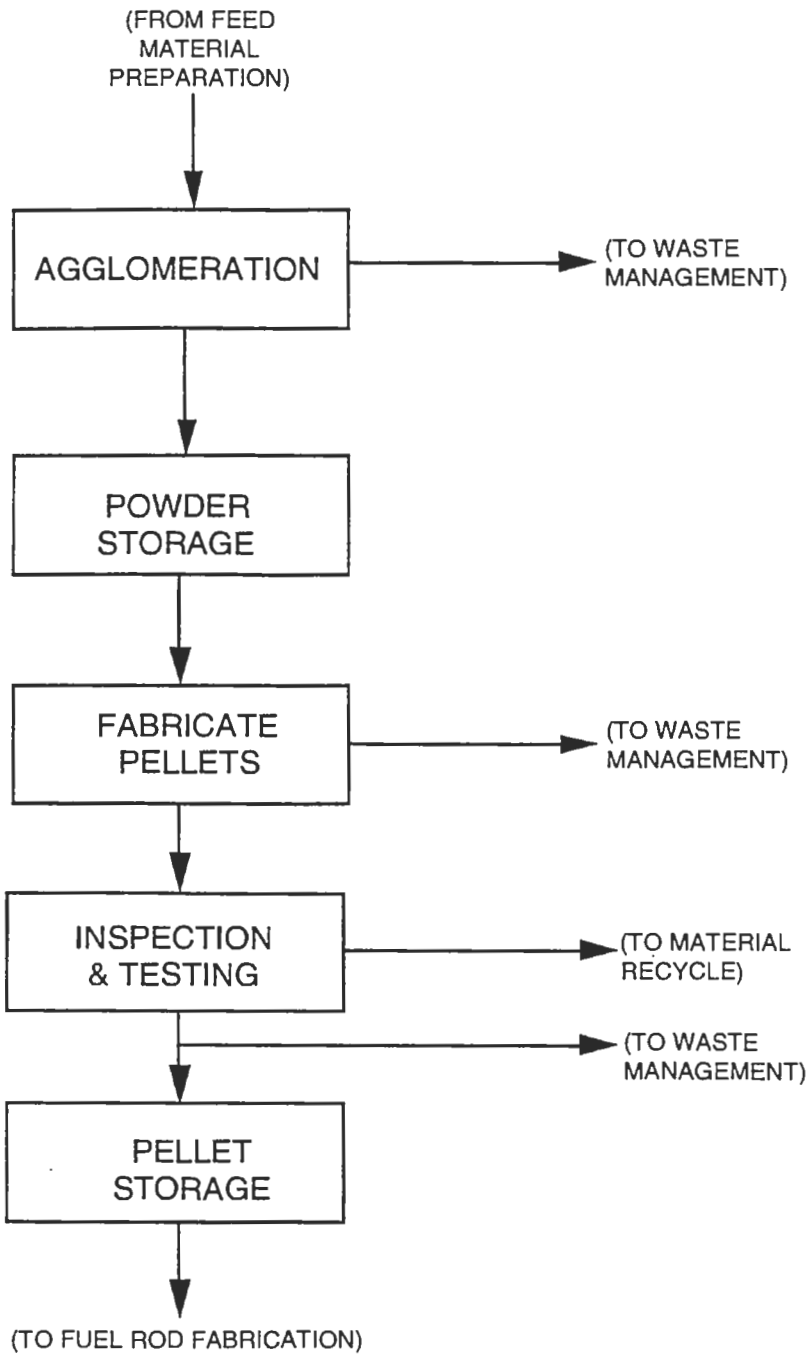

Fig. 4-5. Fuel pellet fabrication process flow diagram.

4.4.6. Fuel Pellet Fabrication: Special Requirements. Processing and storage must observe strict criticality controls, applicable regulatory requirements, safeguards against diversion of plutonium, controls designed to preclude any ingestion of plutonium powder, and any other applicable guidelines. ALARA requirements must be met.

4.4.7. Fuel Pellet Fabrication: Wastes Generated. Wastes generated include contaminated furnace(s); pellet presses; sintering boats; thermocouples, MOX, and additives dust from sintering furnace and grinding operations; contaminated operator clothing, gloves, wipes and shoe covers; used ventilation filters and potentially contaminated hydraulic fluids from the presses; used grinder wheels; and sweepings from pressing operations. Also, there will be the exhaust from the furnace and an oily deposit of lubricant removed from the furnace.

4.5. Fuel Rod Fabrication

4.5.1. Fuel Rod Fabrication: Function. Rod hardware is prepared for pellet loading. Stacks of pellets and components are assembled and loaded into the rods. The open end of the rod is decontaminated, and the second end cap is welded on. The rod is inspected for dimensional correctness and fissile loading, and a leak test is performed. Defective rods are recycled. Acceptable rods are cleaned and stored pending their assembly into fuel bundles. Figure 4-6 illustrates this process.

Like the manufacture of fuel pellets, rod loading has been practiced for over 30 years in this country and abroad.

4.5.2. Fuel Rod Fabrication: Feeds. Feeds for this process include finished fuel pellets, rod hardware, helium gas to backfill the rod, and welding materials. Also, some rods may use depleted UO_2 insulator pellets on either end of the fuel column.

4.5.3. Fuel Rod Fabrication: Products. The products are finished fuel rods that are ready for assembly into fuel bundles.

4.5.4. Fuel Rod Fabrication: Utilities Required. Utilities used in this process include electricity for lighting, instrumentation, MC&A equipment, ventilation, handling equipment, welding machines; and sanitary and potable water. Nondestructive testing equipment is required.

4.5.5. Fuel Rod Fabrication: Chemicals Required. Chemicals required in this process include cleaning fluids and helium gas to backfill rods and to flood the weld area on the rods, and certain analytical chemicals.

4.5.6. Special Requirements. Processing and storage must observe strict criticality controls, applicable regulatory requirements, ALARA policies, and safeguards against the diversion of plutonium.

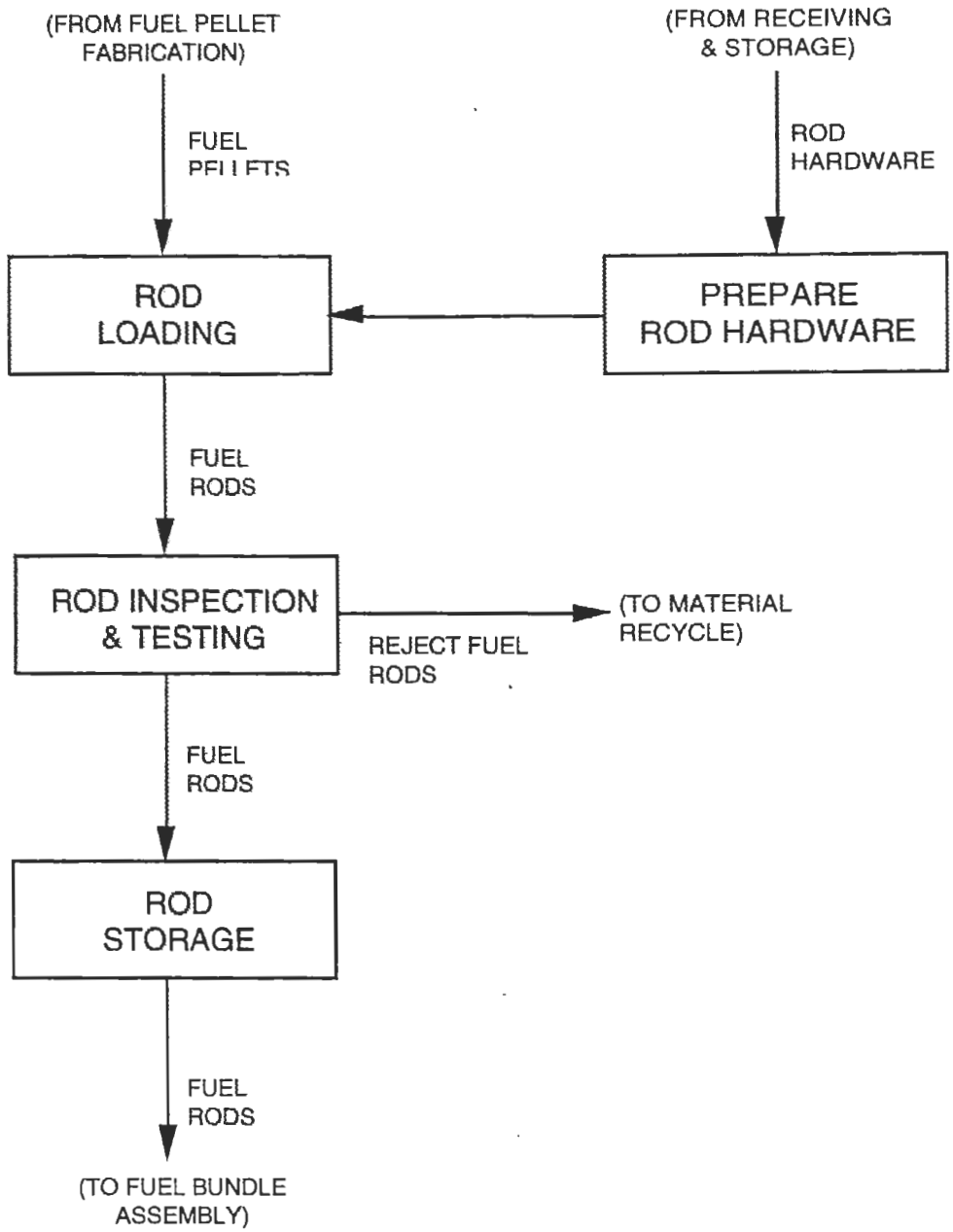

Fig. 4-6. Fuel rod fabrication process flow diagram.

4.5.7. Fuel Rod Fabrication: Wastes Generated. Generated waste includes materials from defective rods (mostly recycled); contaminated operator clothing, gloves, wipes and shoe covers; sacrificial equipment such as funnels; used ventilation filters; used analytical chemicals; and cleaning solutions.

4.6. Fuel Bundle Assembly

4.6.1. Fuel Bundle Assembly: Function. Bundle components are prepared for assembly, and fuel rods are removed from storage. The bundle is assembled, cleaned, and inspected for dimensional conformance. The bundle is then stored pending transfer to a reactor. Rejected bundles are sent to the materials recycle process. Figure 4-7 shows the fuel bundle assembly process. Bundle assembly has been practiced for many years in this country and abroad.

4.6.2. Fuel Bundle Assembly: Feeds. Feeds for this process include finished fuel rods, bundle hardware, and welding materials.

4.6.3. Fuel Bundle Assembly: Products. The products are finished fuel bundles that are ready for charging into a reactor.

4.6.4. Fuel Bundle Assembly: Utilities Required. Utilities used in this process include electricity for lighting, instrumentation, MC&A equipment, ventilation, welding and handling equipment; and sanitary and potable water.

4.6.5. Fuel Bundle Assembly: Chemicals Required. Chemicals required in this process include cleaning fluids (cleaning solvents will be from the current list of RCRA approved liquids).

4.6.6. Fuel Bundle Assembly: Special Requirements. Processing and storage must observe strict criticality controls, applicable regulatory requirements, ALARA policies, and safeguards against diversion of plutonium.

4.6.7. Fuel Bundle Assembly: Wastes Generated. Wastes generated include materials from defective assemblies (mostly recycled), cleaning fluids, and used ventilation filters.

4.7. Process Materials Recycle

4.7.1. Process Materials Recycle: Function. Process materials to be recycled include fuel rods and fuel bundle assemblies rejected in final inspection, fuel pellets rejected because of out-of-specification density, stoichiometry, homogeneity, or dimensions, and various sources of dirty plutonium-bearing scrap. Rejected bundles are disassembled and the fuel rods are removed. The bundle hardware is checked for contamination, decontaminated if necessary, and is disposed of as scrap.

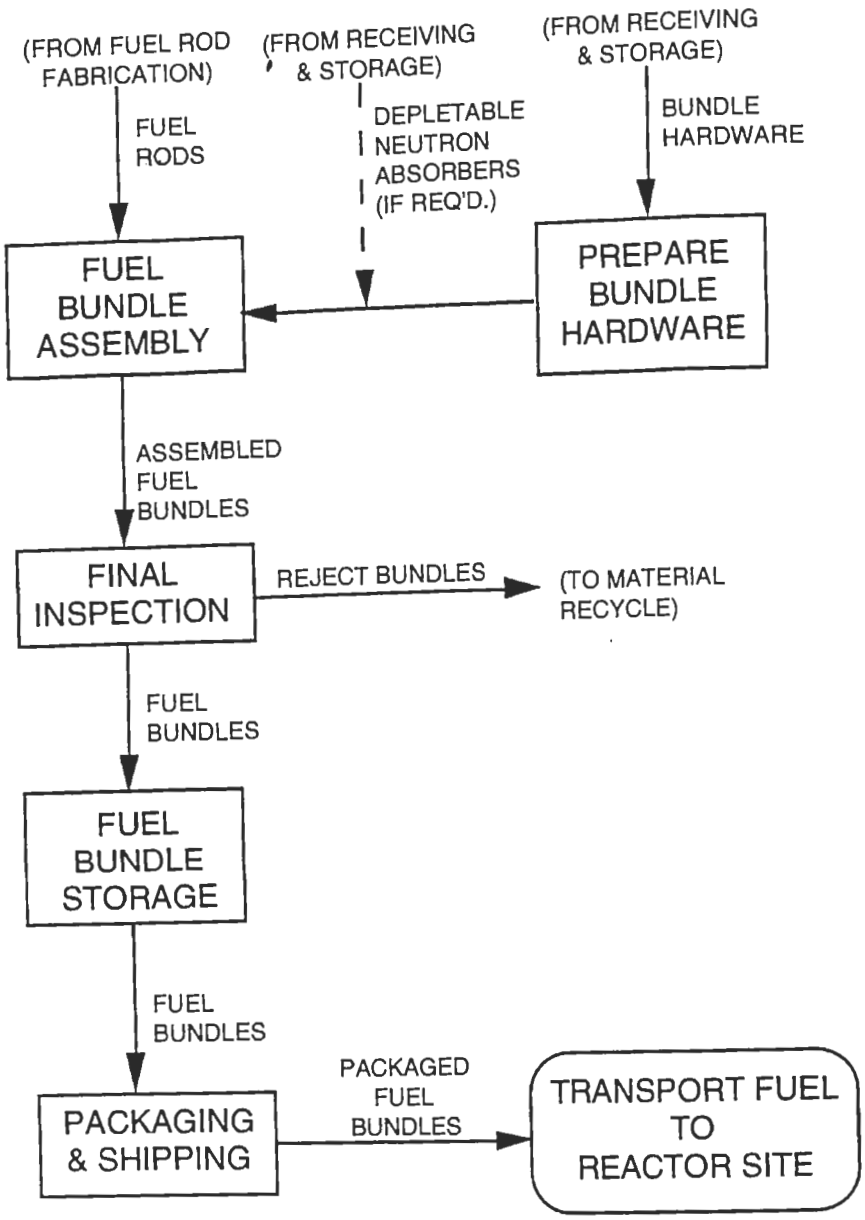

Fig. 4-7. Fuel bundle assembly process flow diagram.

Acceptable fuel rods are placed back into storage for use in a new assembly. Rejected fuel rods are disassembled, the rod components are decontaminated and disposed of as scrap, and the fuel pellets are removed. Acceptable fuel pellets are placed back into pellet storage to be reloaded into a new fuel rod. Rejected fuel pellets are returned to the clean MOX recovery process. During fuel pellet fabrication, clean powders and sintered pellets are reused if acceptable. The overall materials recycle process is depicted in Fig. 4-8. The process of disassembling and recycling reject fuel rods and bundles is depicted in Fig. 4-9.

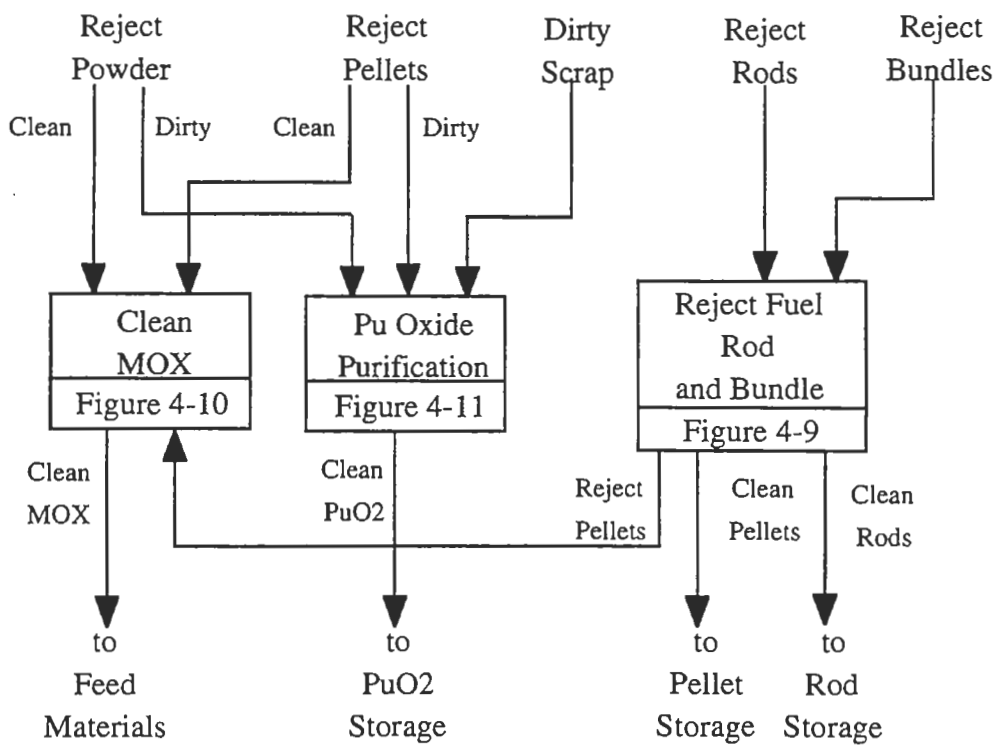

Fig. 4-8. Materials recycle process flow diagram.

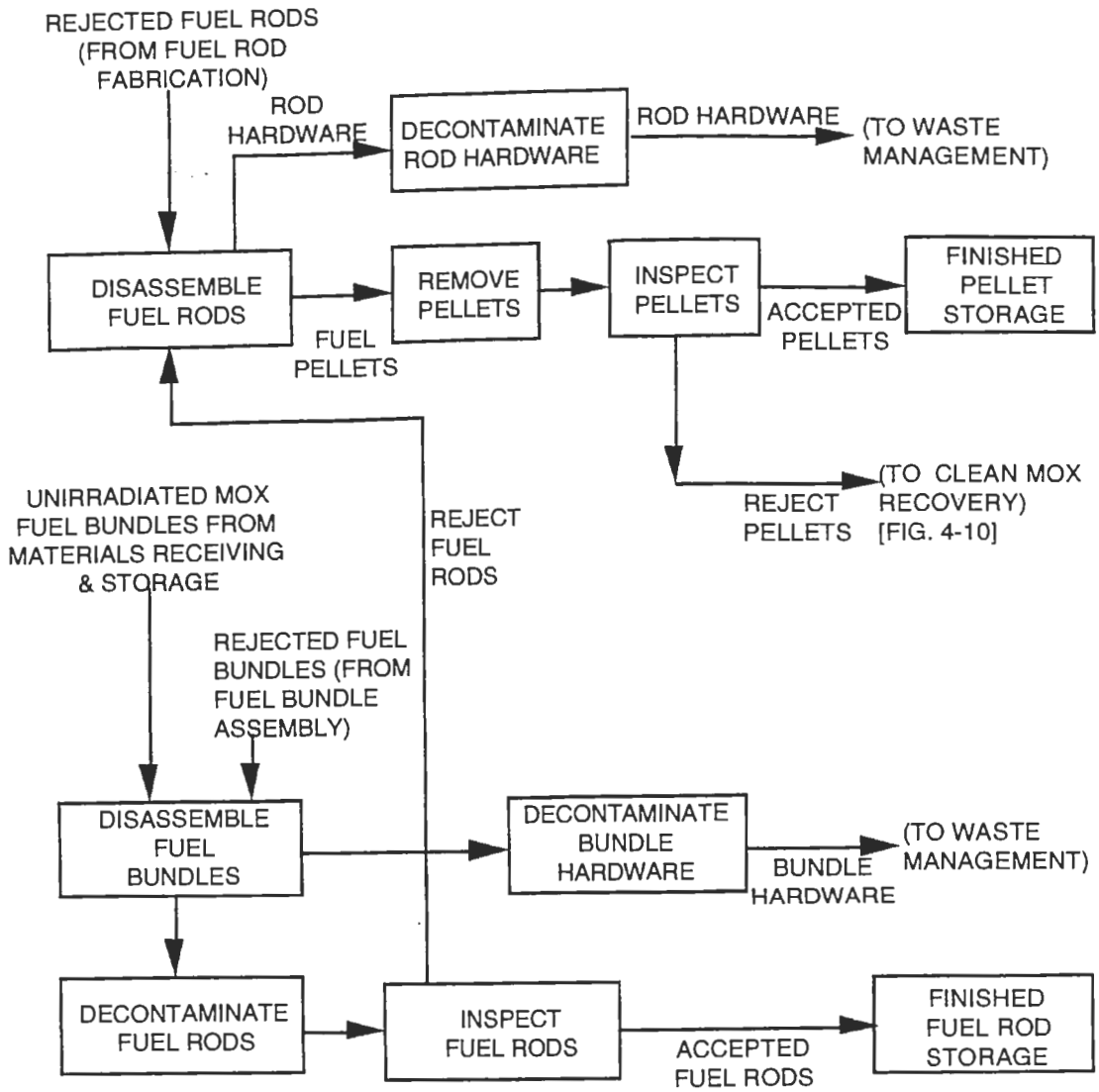

Fig. 4-9. Reject fuel rod and bundle processing flow diagram.

A fraction of the MOX pellets fabricated are imperfect and are rejected during QA testing and inspection. In addition, excess MOX powder may be blended and MOX pellets manufactured to ensure that an adequate finished product is produced to meet contractual commitments. Also, there is a possibility that unirradiated MOX fuel rods in storage at DOE sites may be shipped to this plant to be disassembled and the pellets removed. Such material designated as clean scrap that does not require a chemical purification may be processed as follows: the material is (1) crushed, (2) heated in moist air to break up the crushed oxide into a powder by changing the UO_2 to U_3O_8, and (3) heated in a second furnace with an argon or nitrogen-hydrogen atmosphere so that the U_3O_8 reverts to UO_2. The resulting powder, after screening, is placed in MOX recycle storage and is reused to prepare fresh MOX powder. Figure

4-10 shows a flow diagram of this process. This process for converting clean scrap back into a powder suitable for refabricating into pellets has been used for many years in uranium dioxide fuel plants. To our knowledge it has not been used on plutonium containing scrap, but there is no obvious reason why it should not work on clean MOX scrap. The alternative would be based on the Purex process and would generate substantially more waste.

Hardware from rods that have been shipped in from other sites and disassembled in this plant would be disposed of as noted above for reject rods and bundles.

Fuel that has become contaminated and miscellaneous material such as glovebox floor sweepings and filters suspected of containing plutonium are combined with

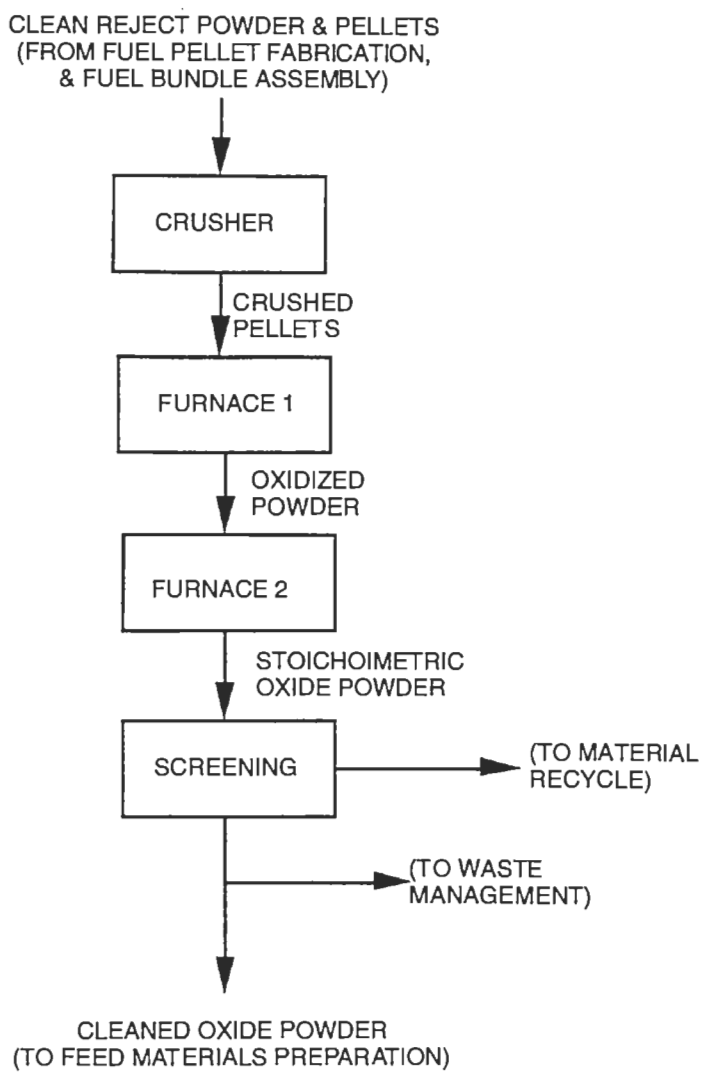

Fig. 4-10. Clean MOX recovery process flow diagram.

out-of-storage PuO_2 in need of purification (see sec. 4.2 "PuO_2 Purification"). The process is depicted in Fig. 4-3.

4.7.2. Process Materials Recycle: Feeds. Feeds for this process include rejected fuel rods, bundles, pellets, and sweepings.

4.7.3. Process Materials Recycle: Products. The products for this process include scrap metal, new fuel pellets, reusable pellets, fuel rods, and depletable neutron absorbers.

4.7.4. Process Materials Recycle: Utilities. Utilities used in this process include electricity for lighting, MC&A equipment, and ventilation; powering oxidation and reduction furnaces for materials recycle, handling, and other equipment; and sanitary and potable water.

4.7.5. Process Materials Recycle: Chemicals Required. Chemicals required in this process include nitric and oxalic acid, hydroxyl amine, sodium nitrite, and cleaning fluids.

4.7.6. Process Materials Recycle: Special Requirements. Care must be taken to distinguish between fuel types, poison rods, and fuel pellets. Processing and storage must observe strict criticality controls, applicable regulatory requirements, ALARA policies, and safeguards against the diversion of plutonium.

4.7.7. Process Materials Recycle: Waste Generated. Wastes generated include scrap metal, uranium dioxide, used acid, contaminated clothing, gloves, shoe covers, wipes, gaseous furnace effluent, and used ventilation filters.

4.8. Waste Management System

4.8.1. Waste Management System: Function. The Waste Management Process involves collecting, assaying, sorting, treating, packaging, storing, and shipping radioactive, hazardous, and mixed wastes from plutonium operations; and hazardous and nonhazardous waste from the support facilities (Figs. 4-11a, 4-11b, and 4-12). The wastes are handled as follows.

1. Initial sorting of solid waste (TRU, LLW, hazardous, mixed, etc.) is performed at the generation source. Solid wastes are treated by a variety of processes to ensure that they are in compliance with Environmental Protection Agency, RCRA, and DOE requirements. The treatment processes include passivation for reactive metals. Waste products are immobilized and packaged to meet Department of Transportation (DOT) and DOE requirements. Liquid organic wastes are separated and dispositioned, along with solid organics.

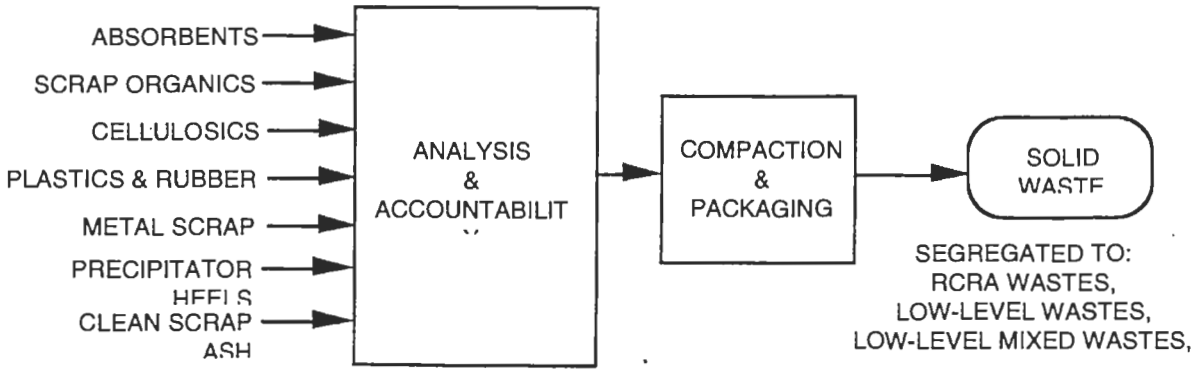

Fig. 4-11a. Solid waste treatment process flow diagram.

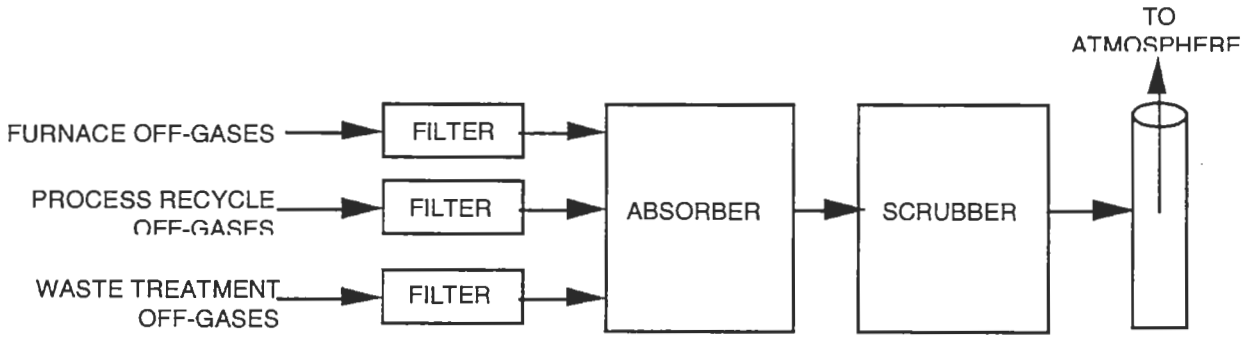

Fig. 4-11b. Airborne emissions treatment process flow diagram.

2. Radioactive liquid wastes are neutralized, filtered, precipitated, concentrated by evaporation, immobilized, and packaged for appropriate disposal.

3. Mixed low level waste is stored either before or after treatment until delisting allows its disposal as radioactive waste. Mixed transuranic (TRU) wastes are handled as other TRU wastes.

4. Nonhazardous, nonradioactive solid, aqueous, and gaseous wastes are treated in conformance with standard industrial practice. Solid wastes are disposed of either at a sanitary landfill or are sent to a commercial recycle center. Aqueous wastes are discharged to natural drainage channels, and gaseous wastes are released to the atmosphere.

In consideration of airborne effluents, a series of HEPA filters in the plant ventilation system will remove airborne radioactive material. The concentration of radioactive material released to the environment through the HEPA system will be a small fraction of the limits presented in 10 CFR Part 20.

Plants may use one or all of the radwaste operations, depending on the plant processing and throughput.

4.8.2. Waste Management System: Feeds. Feeds for this process include contaminated solids, liquid effluent, and airborne effluent, as described in the following categories.

4.8.2.1. Contaminated waste. Contaminated wastes from the facility processes are primarily solids and liquids and are summarized in Table 4-1.

TABLE 4-1
CONTAMINATED WASTE STREAM

Solids:		
Spent crucibles	Gloves	Wipes and rags
Paper	Filters	Overalls
Air masks	Scrubber waste	Batteries
Failed equipment and parts	Leaded glass	Plywood boxes
Metal drums/containers	Plastics	Cement
Insulation	Plutonium oxide sweepings	Glass
Spent resins	Leaded gloves	Rubber
Cleaning sludge	Ceramics	Packaging
Punch and die sets	Heating elements	Contaminated tools
Retired gloveboxes		
Liquids		
Cleaning solutions	Spent lubricants	Vacuum pump oil
Laboratory wastes	Lavatory wastes	Laundry waste water
Contaminated fire water	Spent scrubber solutions	Film developing chemicals
Hydraulic fluids	Paints	Organic liquids

4.8.2.2. Nonhazardous, nonradioactive wastes. Noncontaminated wastes from the facility processes are primarily solids and liquids and are summarized in Table 4-2.

4.8.3. Waste Management System: Products. Products of this process are liquid and air effluent sufficiently decontaminated to release into the environment; and solid waste suitably packaged for burial, disposal to WIPP (if in operation), or for storage on site pending WIPP operation.

Waste management products include radioactive and nonradioactive wastes. The products are:

1. solid TRU, low-level, and low-level and TRU- mixed wastes;

2. hazardous liquids and solids; and

3. nonhazardous, nonradioactive solid wastes such as compacted industrial and sanitary waste, and recyclable materials; and liquid wastes such as reclaimed water and rain.

The above wastes are handled and disposed of in accordance with approved storage and disposal methods. Included are the following.

1. Immobilized TRU and mixed TRU wastes sent to WIPP (if operational, otherwise stored on site).

2. Immobilized low-level wastes and mixed wastes sent to an off-site disposal area or stored on site.

3. Solid industrial/sanitary wastes sent to an off-site industrial landfill.

TABLE 4-2
NONCONTAMINATED WASTE STREAM

Solids:		
Clean, nonplutonium metals	Industrial wastes from utility and maintenance operations	Office and cafeteria wastes
Liquids:		
Sanitary water	Blowdown water	Rainwater
Machine shop cutting and grinding fluids	Process waste water (furnace cooling)	Pump oils
Hydraulic fluids		

4. Recyclable solid wastes sent to an off-site commercial recycle center.

5. Solid and liquid hazardous wastes sent to an off-site RCRA disposal site.

6. Rain runoff discharged to natural drainage channels.

7. Nonhazardous, nonradioactive clean gasses discharged to the atmosphere.

4.8.4. Waste Management System: Utilities. Utilities used in this process include electricity for lighting, powering machines for crushing dirty rejected pellets, and powering ventilation equipment; and sanitary water.

4.8.5. Waste Management System: Chemicals Required. Chemicals required in this process include nitric, hydrofluoric and oxalic acid; hydroxyl amine; and sodium nitrite.

4.8.6. Waste Management System: Special Requirements. Processing and storage must observe strict criticality controls, applicable regulatory requirements, ALARA principles and practices, and safeguards against diversion of plutonium.

Operations to handle radioactive material are carried out in gloveboxes or in other appropriate areas. Automation and robotics will be used whenever possible.

4.8.7. Waste Management System: Wastes Generated. Generated Wastes include contaminated waste packaged in 55-gal. drums or immobilized in concrete; contaminated clothing, gloves, wipes, and shoe covers; and used ventilation filters.

5.0. RESOURCE NEEDS

5.1. Materials/Resources Consumed During Operation

5.1.1. Utilities Consumed. Table 5-1 shows the utilities consumed during operation. These estimates were arrived at by scaling previously designed plutonium processing and MOX fuel fabrication facilities.

5.1.2. Water Balance. Water requirements have been estimated for a facility of this size. An estimated water balance is shown in Fig. 5-1. Cooling tower blowdown is estimated at 2.8 MGY. The cooling tower is in operation and is blowing down for 8 hr/day for 250 days/yr.

5.1.3. Chemicals Consumed. Solid, liquid, and gaseous chemical requirements are summarized in Table 5-2. In addition to the chemicals listed in Table 5-2, the analytical laboratories require up to 100 chemicals (mainly organic) that are used in small quantities (<5 lb).

TABLE 5-1
UTILITIES CONSUMED DURING OPERATION

Utilities	Annual average consumption	Peak demand[a]
Electricity	<13,000 MWh	<5 MW
Diesel fuel	5300 gal.	
Natural gas[b]	<83,000,000 scf	
Raw water	<15,000,000 gal.	

[a]Peak demand is the maximum rate expected during any hour.
[b]Standard cubic feet measured at 14.7 psia and 60°F.

5.2. Materials/Resources Consumed During Construction

Table 5-3 shows the materials/resources consumed during construction. Because of the preliminary state of the facility design, only bounding estimates for construction resources can be made. Table 5-3 values are based on a much larger MOX FFF, nonreactor facility.

6.0. EMPLOYMENT NEEDS

6.1. Employment Needs During Operation

Staffing requirement estimates for the MOX FFF are shown in Table 6-1. The data presented include employees from the management and operating contractor, support organizations, and the DOE. The estimates are reported by the labor categories described below.

Officials and Managers

This category includes occupations requiring administrative and managerial personnel who set broad policies, exercise overall responsibility for execution of these policies, and direct individual departments or special phases of a firm's operations. Included in this category are officials, executives, middle management, plant managers, department managers and superintendents, salaried supervisors who are members of management, and purchasing agents and buyers.

Professionals

This category includes occupations requiring either a college degree or experience of such kind and amount as to provide a comparable background degree. Included in this category are accountants, auditors, architects, artists, chemists, designers, editors, engineers, lawyers, librarians, mathematicians, natural scientists, registered

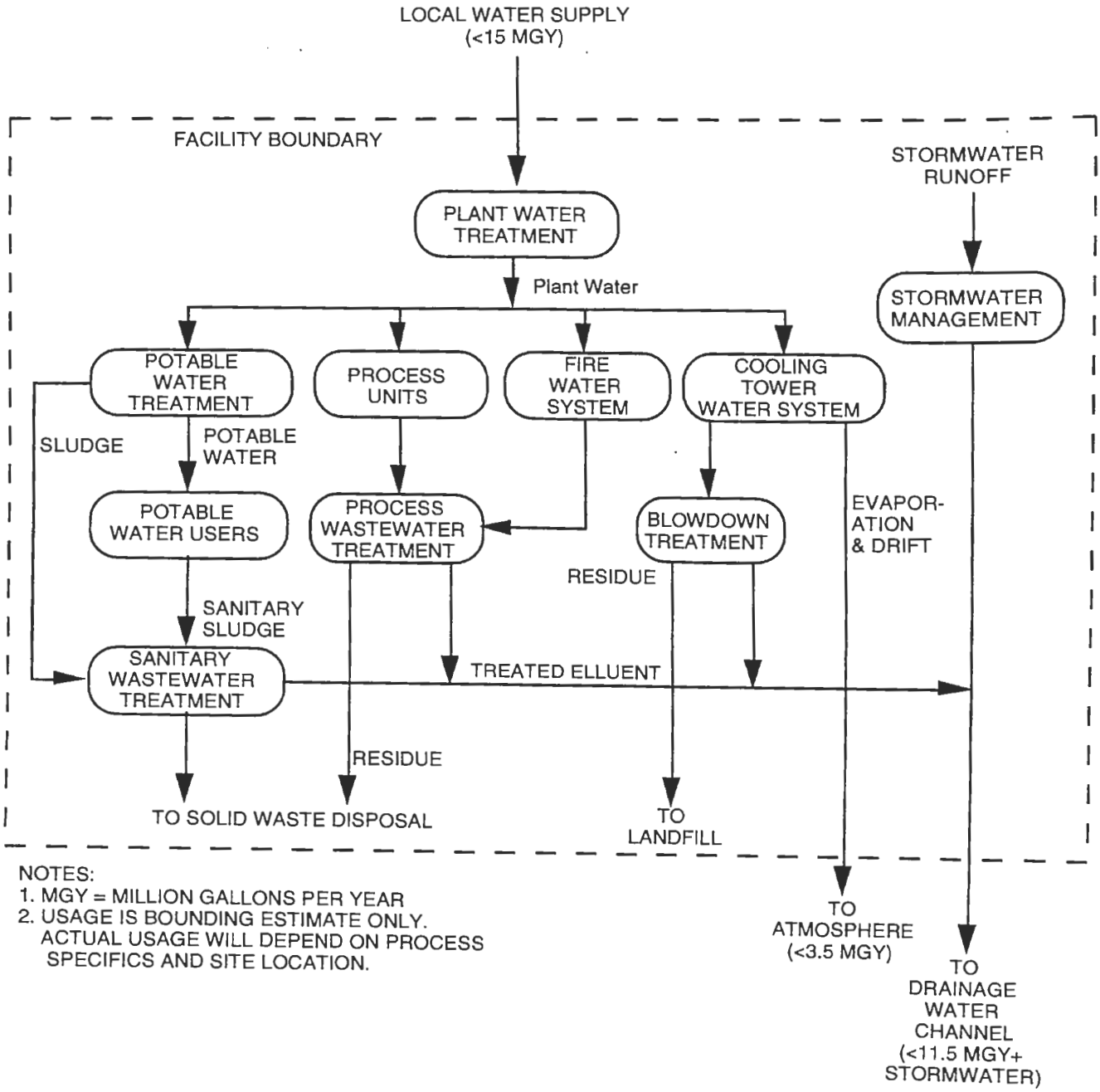

Fig. 5-1. New MOX FFF water balance diagram.

TABLE 5-2
CHEMICALS CONSUMED DURING OPERATION

Solid chemicals	Annual Quantity (lbs)	Liquid Chemicals	Annual Quantity (lbs)
Aluminum nitrate	<5	Nitric acid	<2,100,000
Calcium fluoride	<200	Hydrofluoric acid	<500
Sodium nitrite	<400	Hydroxylamine Nitrate	<5000
Sodium hydroxide	<200,000	Ammonia[a]	<50,000
Oxalic acid	<2000	Liquid Nitrogen	<400,000
Calcium metal	<5	Cleaning solvent	<50,000
Cobalt nitrate	<5		
Iron, magnesium, calcium	<5	**Gaseous Chemicals**	**Annual Quantity (scf)**
Magnesium oxide	<5	Argon[a]	<10,000,000
Magnesium oxide (sand)	<5	Hydrogen[a]	<1,000,000
Resin (Reillex)	<400	Helium	<1,000,000
Sucrose	<5		
Urea	<200		
Portland cement	<100,000		
Zinc stearate	<1000		

[a] This PEIS that both the sintering furnace in the pellet fabrication process (Sec. 4.4) and the reduction furnace in the clean scrap reclamation process (Sec. 4.7) would use an atmosphere composed of hydrogen in a carrier gas—either argon or nitrogen. The usage rates shown for argon and liquid nitrogen assume that one of the two would be used exclusively. A third possibility for the reduction furnace atmosphere in the clean scrap recovery process is the use of cracked ammonia; the usage rate for ammonia assumes that this possibility would be used. The ammonia cracking unit would be located by itself outside the MOX fabrication building. The utilities used by the cracking unit would be within the + or –50% estimate accuracy for the overall plant.

professional nurses, personnel and labor relation specialists, physical scientists, physicians, social scientists, and teachers. Health Physics Technicians will be assigned to monitor many areas and processes in the facility to assure compliance with health and safety requirements.

Technicians

This category includes occupations requiring a combination of basic scientific knowledge and manual skill that can be obtained through 2 years of post high school education, such as that offered in many technical institutes and junior

TABLE 5-3
MATERIALS/RESOURCES CONSUMED DURING CONSTRUCTION

Materials/Resources	Total Consumption	Peak Demand[a]
Utilities		
Electricity	<5,000 MWh	1 MW Peak
Water	<3,000,000 gal	5,000 GPD
Solids		
Concrete	<40,000 cu yd	
Steel	<4,000 tons	
Liquids		
Fuel	<200,000 gal	
Gases		
Industrial gases[b]	<550,000	

a Peak demand is the maximum rate expected during any hour.

b Standard cubic feet measured at 14.7 psia and 60°F.

TABLE 6-1
EMPLOYMENT DURING OPERATIONS

Labor Category	Number of Employees
Officials and managers	40
Professionals	30
Technicians	20
Office and clerical	25
Craft workers	70
Operatives	40
Laborers	10
Service workers	15
TOTAL EMPLOYEES	**250**

colleges, or through equivalent on-the-job training. Included in these occupations are computer programmers; drafters; engineering aides; junior engineers; mathematical aides; licensed, practical or vocational nurses; photographers; radio operators; scientific assistants; surveyors; technical illustrators; and technicians (medical, dental, electronic, physical science). Workers trained to the Radiation Worker II level include press operators, furnace operators, grinder operators, welders, assemblers, production supervisors, inspectors, SNM accountability clerks, and quality control technicians

Office and Clerical

This category includes all clerical-type work, regardless of level of difficulty, where the activities are predominantly nonmanual, though some manual work not directly involved with altering or transporting the products is included. Included in this category are bookkeepers, collectors (bills and accounts), messengers and office helpers, office machine operators (including computer), shipping and receiving clerks, stenographers, typists and secretaries, telephone operators, and legal assistants.

Craft Workers (skilled)

This category includes manual workers of relatively high skill level having a thorough and comprehensive knowledge of the processes involved in their work. These workers exercise considerable independent judgment and usually receive an extensive period of training. Included in this category are members of the building trades [carpenters, plumbers, electricians, metalworkers, ironworkers, painters (construction and maintenance) and bricklayers], hourly paid supervisors and lead operators who are not members of management, mechanics and repairers, skilled machining occupations, members of the printing trades (engravers, compositors, and typesetters), and pattern and model makers.

Operatives (semiskilled)

This category includes workers who operate machine or processing equipment, or perform other factory-type duties of intermediate skill level that can be mastered in a few weeks and require only limited training. Included in this category are apprentices [auto mechanics, members of the building trades (plumbers, bricklayers, carpenters, electricians, and metalworkers), machinists, and mechanics], members of the printing trades, operatives, attendants (auto service and parking), blasters, delivery workers, furnace workers, laundry operatives, milliners, motor operators, oilers and greasers (except auto), painters (manufactured articles), photographic process workers, stationary firefighters, truck drivers, welders and flamecutters, electrical and electronic equipment assemblers, inspectors, testers and graders, and handpackers and packagers.

Laborers (unskilled)

This category includes workers in manual occupations who generally require no special training and who perform elementary duties that may be learned in a few days that require the application of little or no independent judgment. Included in this category are garage laborers; car washers and greasers; groundskeepers and gardeners; stevedores; and laborers performing lifting, digging, mixing, loading, and pulling operations.

Service Workers

This category includes workers in both protective and nonprotective service occupations. Included in this category are attendants (hospital and other institutions, professional and personal service, including nurses aides and orderlies), cooks, counter and fountain workers, elevator operators, firefighters and workers in fire protection, guards, doorkeepers, stewards, janitors, police officers and detectives, recreation facilities attendants, guides, and public transportation attendants.

6.2. Badged Employees at Risk from Radiological Exposure

Based on actual records, the existing Los Alamos National Laboratory Plutonium Facility has shown that approximately 50% of the dosimeter badged population routinely work inside the radiological area. Based on the current design definition, 50% is also assumed for this facility. Accordingly, 50% of badged employees would be at risk for radiological exposure. Of these, the average dose is expected to be 0.25 rem/yr, with a maximum dose of 0.5 rem/yr. In addition to the above number, a small number of badged visitors may enter the radiological area, but this is envisioned to be on a nonroutine basis.

6.3. Employment Needs During Construction

Employment needs during construction are presented in Table 6-2. These estimates assume an actual construction period of 6 years (preceded by 3 years of licensing, design, certification, and preparation). The actual numbers are rough estimates only and are based on scaled values from previously designed plutonium processing facilities.

7.0. WASTES AND EMISSIONS FROM THE FACILITY

7.1. Wastes and Emissions During Operation

Many types of wastes will be generated by the MOX FFF. But because of the undetermined type and throughput of the fuel to be produced, only a partial estimate of the quantities of generated wastes can be made based on existing facility

designs and operating facilities. The types and quantities of waste are discussed in the following sections. Treatment processes can be established and post-treatment quantities estimated as specific processes are designed and waste generation characteristics are identified.

7.1.1. Emissions. Emissions released from the MOX FFF during operations are composed of various gases used or otherwise generated as a result of the various activities involved in MOX fuel fabrication. However, all gaseous effluent streams coming from the facility are thoroughly scrubbed and/or filtered to remove or reduce the amount of undesirable particulates before they are released to the vent streams. The analytical laboratory may contribute additional emissions in very minute quantities. A majority of the chemicals, mainly organic compounds, are used as standards, and are used in minute amounts. By the time any volatile or semivolatile components of the standards and other chemicals join the exhaust streams, they are expected to be at the sub-ppb level. The criteria and emissions for other pollutants are shown in Table 7-1.

Past industrial experience indicates that a small fraction, approximately 10^{-9}, of the radioactive material that is processed through a plant is dispersed to the atmosphere via the filtered exhaust system. Because of newer technologies, even less will be emitted from this facility. Scaling results from Ref. 7-1 to 150 MTHM/yr gives a release of 150 mgHM of MOX/yr. The corresponding release of plutonium is less than 3 mg/yr.

7.1.2. Solid and Liquid Wastes

7.1.2.1. High level wastes. High level waste is the result of reprocessing spent nuclear fuel used to make nuclear weapons or energy. This includes liquid waste produced directly in reprocessing, and any solid waste derived from the liquid that contains a combination of transuranic waste and fission products in concentrations requiring permanent isolation. No high level wastes are expected to be generated during normal operation.

TABLE 6-2
NUMBER OF CONSTRUCTION WORKERS NEEDED BY CRAFT AND BY YEAR

Employees	Year 1	Year 2	Year 3	Year 4	Year 5	Year 6
Craftworkers	125	265	300	230	195	115
Construction management and support staff	75	155	175	135	115	65
Total Employment	**200**	**420**	**475**	**365**	**310**	**180**

TABLE 7-1
ANNUAL EMISSIONS DURING OPERATIONS

Criteria Pollutants	Annual Emission (kg)
Sulfur dioxide	below detection limit
Nitrogen dioxide	below detection limit
Volatile organic compounds	1000
Carbon monoxide	below detection limit
Lead	below detection limit
Plutonium oxide (plutonium isotopic composition— <0.01% ^{238}Pu, Mostly ^{239}Pu, with <6 wt % ^{240}Pu and <0.8 wt % ^{241}Pu)	50×10^{-8} (15 μCi/y)
Other pollutants	**Annual Emission (kg)**
Hydrogen	<2500
Tritium	none
Cleaning solvents	<2500[a]

[a] Cleaning solvents will be from the current list of RCRA approved liquids.

7.1.2.2. Transuranic wastes. TRU wastes are radioactive wastes contaminated with alpha-emitting elements with a higher atomic number than uranium, half-lives greater than 20 yr, and in concentrations greater than 100 nCi/g. Such wastes result primarily from plutonium processing operations. Generally, little or no shielding is required ("contact-handled" TRU waste).

All TRU wastes discharged from the facility are in solid form only. Radioactive TRU wastes containing greater than 100 nCi of plutonium (but less than the current DOE-approved discard limits) will be packaged according to WIPP acceptance criteria. The method of packaging and type of container will be set by current criteria. The estimated amounts of wastes and packaging generated annually are shown in Table 7-2. For the bounding facility, less than 400 cu yd of solid, but no liquid TRU waste, will be generated annually.

7.1.2.3. Low level wastes. Low level radioactive wastes are those that contain less than 100 nCi of plutonium/g of waste. This waste will be collected separately and assayed to assure that the package is below the 100 nCi/g level. It then will be sent to a low level waste disposal facility. For the bounding facility, less than 200 cu yd of solid low-level waste will be generated, along with <1000 gal. of liquid low level waste.

TABLE 7-2
ANNUAL SPENT FUEL AND WASTE VOLUMES DURING OPERATION

	Generated Quantities		Posttreated Quantities	
Category	Solid (cu yd)	Liquid (gal.)	Solid (cu yd)	Liquid (gal.)
Spent fuel	none	none	none	none
High level waste	none	none	none	none
Transuranic waste	<400	none	<630	none
Low level waste	<200	<1000	<200	none
Mixed transuranic waste	<5	none	<30	none
Mixed low level waste	<50	<200	<50	none
Hazardous waste	< 200	<1000	<200	none
Nonhazardous (sanitary) wastes	<100	<3e06	<100	<3e06
Nonhazardous (other) wastes	<100	<60,000	<100	<61,400
Recyclable wastes	<10	none	<10	none

7.1.2.4. Mixed transuranic wastes. Hazardous wastes are defined as solid wastes that are listed in the RCRA regulations and that are ignitable, corrosive, reactive, or toxic. Mixed TRU wastes are those that have hazardous and radioactive components above 100 nCi/gr. These wastes will be sent to a DOE approved mixed waste facility. Less than 5 cu yd of solids and no liquid mixed TRU wastes will be generated annually. Mixed wastes will include solvents, lead, and scintillation vials.

7.1.2.5. Mixed low level wastes. Hazardous wastes are defined as solid wastes that are listed in the RCRA regulations as ignitable, corrosive, reactive, or toxic. Mixed wastes are those that have hazardous and radioactive components of less than 100 nCi/gr. These wastes will be sent to a DOE approved mixed waste facility. For this bounding facility, less than 50 cu yd of solids and <200 gal. of liquid wastes will be generated annually. Mixed wastes will include solvents, lead, and scintillation vials.

7.1.2.6. Hazardous wastes. Hazardous solid waste consists of nonradioactive materials such as lead packing and wipes contaminated with oils, lubricants, and cleaning solvents. Hazardous solids are compacted and sent to an authorized RCRA disposal site. Hazardous solid waste quantities are expected to be <200 cu yd/yr. Hazardous liquid wastes generated from the facility include cleaning solvents, vacuum pump oils, film processing fluids, hydraulic fluids from mechanical equipment, antifreeze solutions, and paint. All hazardous liquid wastes are collected in Department of Transportation approved containers and are shipped to

an authorized RCRA disposal site. Less than 1000 gal. of liquid hazardous waste will be generated annually.

7.1.2.7. Nonhazardous (sanitary) wastes. The sanitary wastes generated include nonradioactive and nonhazardous discharges from sinks in chemical laboratories that handle no radioisotopes, such as wastes from showers, urinals, water closets and lavatories, sink drainage, and floor washings. Sanitary effluents will be treated in accordance with National Pollutant Discharge Elimination requirements. The liquid effluent will be sampled weekly, and the solid wastes quarterly. Analyses on the liquids and solids will include determination of radioactive materials, tritium, and heavy metals.

7.1.2.8. Nonhazardous (other). Solid industrial wastes and trash generated from the facility are sent to a sanitary or industrial landfill off site. Substantial quantities of water are used in the process and are subsequently decontaminated to a point where it could be released to the environment. Potentially, some of this water may be used to mix with cement to immobilize TRU wastes.

Storm water collected from roofs and paved areas will be sampled periodically for radioactive content. Water from room heating will be returned to the heating unit with no probability of contamination.

No liquid recyclable wastes external to the facility will be generated. Only recycled office supplies, such as paper, packaging, and toner cartridges, will be generated. No solids from the process buildings will be recycled outside the facility.

7.2. Wastes and Emissions Generated During Construction

This section presents the significant gaseous emissions and wastes generated by the facility during construction. Because of the preliminary nature of the bounding facility, hazardous waste generation cannot be estimated at this time. Typically, however, these quantities are very small compared with the quantities generated during operation.

7.2.1. Emissions

The principal sources of air emissions during facility construction are fugitive dust from land clearing, site preparation, excavation, and other construction activities; exhaust from construction equipment; and vehicles delivering construction materials and construction workers. The peak annual emissions generated during construction are shown in Table 7-3 and are very conservative estimates based on previously designed plutonium processing facilities.

7.2.2. Solid and Liquid Wastes. The total amounts of solid and liquid wastes generated during construction are given in Table 7-4.

TABLE 7-3
EMISSIONS DURING THE PEAK CONSTRUCTION YEAR

Criteria Pollutant	Quantity (tons)
Sulfur dioxide	10
Oxides of nitrogen	160
Volatile organic compounds	50
Carbon monoxide	250
Particulate matter (10 microns and smaller)	75
Lead	0
Total suspended solids	200

TABLE 7-4
TOTAL WASTES GENERATED DURING CONSTRUCTION

Waste Category	Quantity
Hazardous solids	None
Nonhazardous solids	
Concrete	<4000 cu yd
Steel	<300 tons
Hazardous liquids	<100 cu yd
Nonhazardous liquids	
Sanitary	<3,000,000 gal.

7.2.2.1. **Radioactive wastes.** There will be no radioactive wastes generated during construction.

7.2.2.2. **Hazardous wastes.** There will be negligible hazardous wastes generated during construction.

7.2.2.3. **Nonhazardous wastes.** Nonhazardous wastes will be handled just like those generated during operation. Sanitary effluents will be treated in accordance with National Pollutant Discharge Elimination requirements. Solid industrial wastes and trash generated from the facility are sent to a sanitary or industrial landfill off site.

8.0. DESIGN PROCESS FOR ACCIDENT MITIGATION

8.1. Operational, Design Basis, and Beyond Design Basis Bounding Accidents

The experience gained in the design, construction, modification, and decommissioning of the facilities of the existing nuclear weapons complex will be utilized in the design process for the MOX FFF. This information will also be employed in the safety assessment to better estimate performance and improve the safety of the new MOX FFF.

Safety analysis reports and DOE Defense Production safety surveys provide information from which bounding accident scenarios for plants of the existing complex, relevant to this facility, have been selected. Bounding accident scenarios are those accidents of a class involving a particular hazard and that result in the largest potential consequence for a particular accident initiator. These selected scenarios provide a vehicle for explaining how the application of current safety assessment methodologies, design criteria, and industry consensus codes and standards will be used to provide a modern facility with design features that prevent or mitigate the consequences of these accidents. The design process for the facility will be comprehensive and will evaluate a broad spectrum of hazards and accident initiators as well as design approaches to risk reduction. The safety analysis will include deterministic accident analysis as well as probabilistic risk assessment.

DOE orders and NRC regulations require that special safety equipment be redundant and be able to withstand a single failure. DOE order 6430.1A, section 1300-3.3 states that, "The design shall ensure that a single failure . . . does not result in the loss of capability of a safety class system to accomplish its required safety functions. To protect against single failures, the design shall include diversity to minimize the possibility of concurrent common mode failures of redundant items."

DOE order 6430.1A also states that, "Safety class items are systems, components, and structures, including portions of process systems, whose failure could adversely affect the environment or the safety and health of the public. Specifically, safety class items are those systems . . . whose failure would produce exposure consequences."

In the accident scenario descriptions that follow, the systems of particular relevance include the confinement system, which is defined as a composite of the structure and its associated ventilation systems, and the fire protection systems. These must remain "fully functional following any credible design basis accident (DBA)." This requires that accident scenarios that would disable such systems be reduced in probability, as determined by PRA, to beyond design basis accident (BDBA) levels through a combination of appropriately engineered systems and administrative controls.

In safety analysis reports, detailed hazards analyses are utilized to determine which potential accidents to analyze deterministically. To determine event categories, probabilities can be determined for the sequence of events leading to a potential accident as identified as part of an event tree analysis. Materials at risk and potential dispersal mechanisms are identified to determine areas with the potential for accidents with radiological material release. In this report there is insufficient information to determine sequences of events. Rather, processes believed to have the most material at risk were identified, and potential accidents assumed. A methodology developed by the USNRC (unpublished) was used to categorize accidents as operational and design basis or beyond design basis, given the lack of accident frequency information. Figure 8-1 illustrates this methodology. An estimate for the probability of the initiating event is required, but the probabilities for other failures are not required. Systems are assumed to be safety class systems with sufficient redundancy that a single failure would not disable the system. This methodology was developed for nuclear reactors but is a reasonable tool for similar preliminary determination of event categories for nonreactor nuclear facilities. In estimating accident probabilities, accidents classifications were determined based on this methodology, and probability estimates were assigned based on similarity to

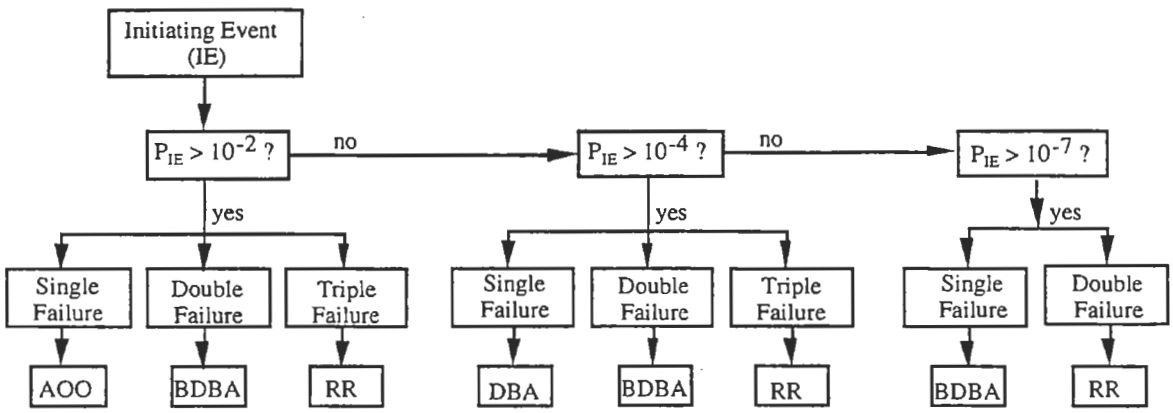

P_{IE} - probability of occurrence of initiating event (per year)

AOO - anticipated operational occurrence

DBA - design-basis accident

BDBA - beyond design-basis accident

RR - residual risk (sufficiently small to represent negligible public risk)

Single Failure - 1 single active component failure or 1 operator error

Double Failure - 1 system failure, or 2 component failures, or 2 operator errors

Triple Failure - more than Double Failure

Fig. 8-1. Accident classification methodology diagram.

published accident analyses and the limitations of the event category. If the assumption is made that the plutonium at risk is from pit disassembly, the isotopic concentration is <0.01 wt% ^{238}Pu, <6 wt% ^{240}Pu, < 0.8 wt% ^{241}Pu, with the balance being ^{239}Pu.

Several accident scenarios have been identified as likely to have credible relevance for the facility. These potential accidents have been identified based on operating experience at Los Alamos National Laboratory's Plutonium Facility. Because of the enormity of the analysis that would be required to study all credible accidents, only accidents of particular interest are quantified for analysis of their frequency and contribution to risk. Such accidents are invariably those that are not often observed. In fact, at the Los Alamos Plutonium Facility the frequency of occurrence over the 15-yr operational history of the plant has been zero. The most likely accidents at the Los Alamos Plutonium Facility have been identified as those that involve plutonium solutions. The processes used at the proposed MOX FFF are, for the most part, dry and do not involve solutions. This obviates those accidents involving plutonium solution, primarily criticality accidents.

A more formal accident analysis was performed for the Los Alamos Plutonium Storage Facility. The results of this analysis have been considered, and pertinent results are examined and reported in the following paragraphs.

In all cases, three major types of accidents have been identified. These are fire, explosions, and leaks/spills of nuclear material.

The methodology in Ref. 8-4 was used to analyze these postulated accidents. The source term is estimated by

$$\text{Source Term} = \text{MAR} \times \text{DR} \times \text{ARF} \times \text{RF} \times \text{LPF} \quad ,$$

where

MAR = material-at-risk (curies or grams),
DR = damage ratio,
ARF = airborne release fraction (or airborne release rate for continuous release),
RF = respirable fraction, and
LPF = leakpath factor.

To estimate source terms using this equation, the MAR was estimated from a knowledge of the processes to be employed. The DR was assumed to be 1. The ARF and RF were estimated utilizing the reference material in Ref. 8-4. For operational and design basis cases, the leakpath factor LPF was based on 2 stages of HEPA filtration with efficiencies assumed to be 0.999 and 0.998. For one of the BDBA

accidents, the methodology of Ref. 8-5 was used to calculate an LPF. For the others, LPF was taken from similar cases in safety analysis reports.

8.1.1. Operational and Design Basis Accidents. Operational Accidents are those accidents in the facility that reasonably may be expected to occur within the lifetime of the facility or at a similar facility. This includes accidents, such as chemical or radioactive material spills, and small fires. Downtime following an operational accident should be small. DBAs are more severe, but still credible accidents. These accidents are not expected to occur during the lifetime of the facility. The facility design, engineered safety systems, and administrative controls/standard operating procedures are based on minimizing the likelihood of a DBA or more severe accident, and also mitigating the consequences of a DBA should such an accident occur.

8.1.1.1. Design basis fires. Facility design and administrative controls assure that flammable material loadings are minimized in the plutonium processing areas. Only small quantities of flammable liquids and gases are allowed as needed for processing. Typically, the gas bottles are located outside the process cells so that a wall capable of withstanding a large scale explosion is located between flammable gas bottles and process cells. Also, the gloveboxes are maintained with an inert atmosphere. Large sources of flammable gases and liquids are located well away from the plutonium processing building. Natural gas only goes to the heating plant located a sufficient distance from the plutonium building to prevent damage from a natural gas explosion. Hot water and process steam, if necessary, are piped to the plutonium processing facility. Large quantities of flammable liquids, i.e., diesel for the backup generators, are also located well away from the plutonium processing facility.

The manufacturing building will be designed with passive fire rated barriers to withstand the maximum possible fire and to contain the fire within the given compartment in the event all fire detection and suppression systems fail.

The automatic sprinkler systems located in the plutonium processing areas will be safety class to insure their operability and to minimize the possibility of a release resulting from fire. Compensatory measures would be implemented in the event the loading dock system is taken out of service. The plutonium processing areas would have smoke detection equipment installed throughout the facility in addition to automatic sprinkler systems.

A typical bounding fire case taken from safety studies for existing facilities is a fire on an open loading dock caused by welding, cleaning solvents, electrical shorts, or other causes. The loading dock for a new facility would be entirely enclosed within the CAT I structure. Thus, a fire of this type with an open truck bay door would require significant violations of operational requirements. Thus, this case should have a lower frequency of occurrence for a new facility. A single drum of combustible waste is involved in the fire. The material at risk is 18 g of plutonium.

An ARF of 4.3×10^{-3} (Ref. 8-4), an RF of 1, and LPF of 1 results in an initial source term of 0.8 g of plutonium. The probability of this event is approximately 10^{-3} to 10^{-4}/yr. It is assumed that four people are in the vicinity of the fire as it starts and that there are 250 workers at the site.

A bounding DBA fire case for a fire inside the facility was determined by combining assumptions from several Los Alamos plutonium facility safety analyses and applying the equation given above. It is assumed that a process cell contains a glove box used for milling plutonium powder. The gloves have become coated with a layer of plutonium dust. Estimates place this glove loading at <2 g per glove. For this analysis, the MAR is assumed to be 2 g of plutonium dust on each of 12 gloves for a total of 24 g of plutonium. It is further assumed that the gloves are stowed outside the glovebox. A flammable cleaning liquid such acetone or isopropyl alcohol is brought into the process cell in violation of operating procedures, spills, and ignites. The initial extent and intensity of the fire are sufficient to completely incinerate the gloves. The sprinkler system activates and protects the glovebox from further damage. Examination of pertinent cases in Ref. 8-4 shows ARFs <0.1; consequently, the ARF is taken as 0.1 and the RF as 1.0. It is assumed for purposes of calculating a bounding source term that the sprinkler system does not remove any of the airborne plutonium. Air flows from the room into the glovebox; consequently, no plutonium gets into the room beyond the material originally on the gloves. The ventilation system with HEPA filters continues to function through the accident. Therefore, an LPF of 2×10^{-6} is used. The net source term for plutonium released from the stack is 4.8×10^{-6} g. The probability for this accident is in the range of 10^{-3} to 10^{-5}/yr. It is assumed that there are 4 people in the vicinity of the fire as it starts and there are 250 workers at the site.

8.1.1.2. Design basis explosion. Explosives are not allowed in the plutonium processing areas of the facility. The only explosives allowed within the site protected area will be DOT Class "C" explosives. Examples of Class "C" explosives are squibs used to activate mechanical devices and ammunition for firearms. The only Class "C" explosives (other than ammunition carried by physical security personnel) are confined to the area where transport vehicles are unloaded. These explosives are associated with physical security devices located in the transport vehicles. These devices are completely enclosed and the hazardous effects are contained if the device is activated.

Materials such as hydrogen and oxyacetylene are used in the facility. Natural gas lines are not present in the process areas, and bottled gasses are used instead. The design process will include a comprehensive assessment of possible accident scenarios involving material at risk. Mitigating design features will be incorporated, as required by the safety analysis.

The facility will accept only material that has been certified as being chemically stable before shipment to the plant. Several steps are being considered for assuring

the long-term stability of stored plutonium, thereby minimizing the likelihood of an overpressurization incident. Parameters for safe storage, such as chemical form and concentration of impurities, will be defined. Storage conditions necessary to ensure safe long-term storage will be defined and the vault will be designed to maintain these conditions.

A bounding DBA explosion is a deflagration of a flammable gas mixture inside a glovebox. Normally, gloveboxes operate with an inert atmosphere. Small quantities of hydrogen may be used in processing. Through some unforeseen set of failures, a combustible gas mixture accumulates inside a glovebox and is ignited, possibly by an electrical spark from an operating electrical device. The glovebox identified as having the most material-at-risk contains the milling operation where PuO_2 is milled to a fine powder prior to mixing with UO_2. The criticality limit for PuO_2 in a dry atmosphere is assumed to be 10 kg (taken from a Los Alamos TA-55 standard operating procedure). The deflagration blows out the HEPA filter from the glovebox ventilation system exit. Gloves also may be blown out. The room volume and duct system volumes are sufficient to attenuate the pressure wave to levels below the approximately 2 psi needed to damage the building ventilation system HEPA filters for the deflagration of a credible buildup of a flammable gas mixture in a glove box. Reference 8-4 does not contain any cases that correspond exactly to this situation. An ARF of 0.1 bounds most of the cases that have some common features with the postulated situation. An ARF of 0.1 is conservative because the openings to the room are small relative to the size of the glovebox. The PuO_2 particle size distribution is unknown at this time. For this analysis, an RF value of 0.5 is assumed. As in the previous case, the building HEPA filters and ventilation system continue to operate, yielding an LPF of 2×10^{-6}. The release from the stack is then 1×10^{-3} g of plutonium. The probability for this accident is in the range of 10^{-3} to 10^{-5}/yr. Again, 4 people are in the vicinity of the glovebox and there are 250 workers at the site.

8.1.1.3. Leaks or spills of nuclear material. The most catastrophic case of a leak or spill of nuclear material would result from a fork lift or other large vehicle running over a package of nuclear material and breaching the container. Attention to procedures by skilled operators would obviate the placement of nuclear material where it could get run over; however, in the unlikely event that this happens the following accident scenario results. According to an accident examined in detail in Ref. 8-2, the estimate is that if a 4-kg package of PuO_2 was run over, 0.4 g would become airborne. This corresponds to a material-at-risk x damage ratio of 4000 g x 0.25, with an airborne release fraction of 4×10^{-4}. This calculation also assumed that cleanup operations result in the resuspension of 0.04 g for a total airborne release to the room of 0.44 g of plutonium. After three-stage HEPA filtration of the facility exhaust, the total release to the environment was estimated to be 1.7×10^{-3} µg. The probability calculated from the event tree for this scenario is 4.5×10^{-5}/yr. It is assumed that 4 people are in the immediate vicinity and there are 250 workers at the site.

8.1.2. Beyond Design Basis Accidents. BDBAs are characterized as coupling multiple, independent failures of safety grade systems with an initiating event. Single failure events only lead to BDBAs when coupled with very low frequency initiating events. This is illustrated by Fig. 8-1. Safety systems are designed to preclude common mode failures for all but cataclysmic events. Facility design, engineered safety features, and administrative controls ensure that credible failure sequences result in, at worst, DBAs. The facility design, engineered safety features, and administrative controls ensure that more severe accidents fall into the BDBA category. That is, no credible sequence of events can be postulated, leading to one of these more severe accidents. Even for these more severe accidents, though consequences may be greater than consequences for most DBAs, off-site consequences can still be small.

8.1.2.1. Criticality accident. The operating history of plutonium facilities has shown that although very unlikely, criticality accidents are most likely to occur with plutonium solutions. There will not be sufficient quantities of plutonium solutions at the MOX FFF to (if mishandled) cause a criticality accident. The most likely cause of a criticality incident involving plutonium oxides would be improper accidental stacking of items. Plutonium powder criticality events have also been postulated. Plutonium facilities are designed so that more that two operator errors/equipment failures must be postulated for a criticality accident to occur. The probability for a MOX fuel facility is $<10^{-7}$/yr.

Operating history has shown that a criticality accident has never occurred because of improper stacking or handling of bulk nuclear material. The combination of many factors, including a conservative approach to material spacing, packing density, manner and type of containment, and maximum quantities of fissile material contribute to reducing the risk of a criticality accident. Multiple violations of procedure would have to occur to result in a criticality event at this facility. A criticality event over the lifetime of the facility is extremely unlikely.

Although a criticality accident is very unlikely, an analysis has been presented here for illustrative purposes. Data for this analysis were taken from Refs. 8-1, 8-2, and 8-3. In the worst case scenario, there is no barrier between the operator and the criticality event. The criticality incident would not exceed 5×10^{17} total fissions. In Table 8-1, dose estimates are given at various distances from the incident, assuming an unmoderated, unshielded point source, and assuming prompt evacuation at 5.02 m/s. Anyone within an unshielded distance of 5 m of the incident would receive more than 550 rem. The incidence of death, assuming treatment, from whole-body doses of from 600 to 1000 rem is 80 to 90%.

Alarms would sound throughout the facility in the case of a criticality accident. Personnel, who have been thoroughly trained in emergency procedures, would evacuate the area. The dose received from the incident would be the most significant hazard to people in the room (Table 8-1); however, the possibility of

TABLE 8-1
DOSE RECEIVED FROM A CRITICALITY ACCIDENT

Initial Distance from Critical Source		Calculated Dose from Radiation[a]
(m)	(ft)	(rem)
0.9	3	11,000
2.0	6.5	3200
3.0	10	4850
4.0	16	550
10.1	33	80

[a] Dose assumes neutron yield of 5×10^{17} fissions.

inhalation of gaseous by-products (iodine, krypton, and xenon) would also exist. It is assumed that 4 people are in the vicinity of the event and that there are 250 workers at the site. One of these workers is adjacent to the criticality and the other 3 are assumed to be at a distance of 4 m.

Reference 8-4 contains a calculation for a dry powder plutonium criticality source term for 1×10^{17} fissions. This case was determined to have the most radioactive material release for any of the postulated criticality events in the MOX facility. This calculation was scaled to 5×10^{17} fissions. Table 8-2 shows the resulting source term for important nuclides released.

Heat generated in a criticality accident may be sufficient to ignite combustibles in the immediate area; however, the spread of a fire or a fire of large magnitude is not credible because of the minimal quantities of flammable material or combustibles on hand. Any fire would be put out by the automatic sprinkler system.

8.1.2.2. Beyond design basis fire. A typical fire with coincident failures of two or more major safety systems constitutes a BDBA fire. The bounding DBA fire case for a fire inside the facility presented in 8.1.1.2 forms the basis for the release to the processing cell. It is assumed that a process cell contains a glove box used for milling plutonium powder. The gloves have become coated with a layer of plutonium dust. Estimates place this glove loading at <2 g. For this analysis, the MAR is assumed to be 2 g of plutonium dust on each of 12 gloves for a total of 24 g of plutonium. It is further assumed that the gloves are stowed outside the glovebox. A 2-h fire is postulated. The initial extent and intensity of the fire are sufficient to completely incinerate the gloves. The ARF again is taken as 0.1 and the RF as 1.0. It is assumed

TABLE 8-2
IMPORTANT NUCLIDES RELEASED FROM POWDER PLUTONIUM CRITICALITY

Nuclide	Ci Produced	Airborne Release Fraction (ARF)	Ci Released
Kr-83m	5.5	0.5	2.75
Kr-85m	3.5	0.5	1.75
Kr-85	4×10^{4}	0.5	2×10^{-4}
Kr-87	21.5	0.5	11
Kr-88	11.5	0.5	6
Kr-89	650	0.5	325
Xe-131m	5×10^{-3}	0.5	2.5×10^{-3}
Xe-133m	1×10^{-1}	0.5	5×10^{-2}
Xe-133	1.5	0.5	0.75
Xe-135m	165	0.5	85.0
Xe-135	20.5	0.5	10
Xe-137	2450	0.5	1225
Xe-138	550	0.5	275
I-131	0.5	5×10^{-2}	2.5×10^{-2}
I-132	60	5×10^{-2}	3
I-133	8	5×10^{-2}	0.4
I-134	215	5×10^{-2}	11
I-135	22.5	5×10^{-2}	1.0

that the ventilation system and the sprinkler system are inoperable. Thus, there are two major independent system failures. It is assumed that the glovebox, though damaged, still contains most of the plutonium originally located within it. Convection currents within the glovebox could entrain some small particles and carry them outside the glovebox. The amount of plutonium carried outside the glovebox in this manner is much smaller than the amount of plutonium dispersed by the burning of the gloves. The primary difference between the events postulated in this case, and in the DBA fire case, is that the safety systems fail and the fire provides a mechanism to disperse the plutonium outside the process cell and ultimately outside the building.

A calculation for a postulated fire in building PF-4 at the Los Alamos TA-55 plutonium facility was recently completed. The fire burned for 2.1 hr, with an average energy generation rate of 244 kW (8.34×10^{5} Btu/hr). Most of the energy released by the fire went to heating structural mass. There was 54 kW (1.83×10^{5} Btu/hr) available for pressurizing the air and thus dispersing plutonium outside the process cell. A Los Alamos code known as GASFLOW was used to model the

dispersion of fire products. LPFs can be deduced from these calculations. Two scenarios were assumed. In one, all doors remained closed for the duration of the accident. In the other, a set of doors was assumed open for part of the time to account for worker evacuation. The calculated LPFs for these cases are 1.1% and 1.4%, respectively. Using the more conservative value for LPF, the final source term for this fire is 3.4×10^{-2} g plutonium released. The probability for this accident is assumed to be $<10^{-7}$/yr based on previous experience for accidents with a comparable number of independent safety system failures. It is assumed that 4 people are in the vicinity of the fire as it starts and that there are 250 workers at the site.

8.1.2.3. Beyond design basis explosion. Materials such as hydrogen and oxyacetylene are used in the facility. Natural gas lines are not present in the process areas, and bottled gasses are used instead. The design process will include a comprehensive assessment of possible accident scenarios involving material at risk. Mitigating design features will be incorporated, as required by the safety analysis.

The facility will only accept material that has been certified as being chemically stable before shipment to the plant. Several steps are being considered for assuring the long-term stability of stored plutonium and, therefore, minimizing the likelihood of an overpressurization incident. Parameters for safe storage, such as chemical form and concentration of impurities, will be defined. Storage conditions necessary to ensure safe long-term storage will be defined, and the vault will be designed to maintain these conditions.

The explosion of an oxyacetylene bottle in a process cell frequently has been postulated as a bounding explosion. The catastrophic explosion of an oxyacetylene welding rig is an event that will require further analysis. Although this is not a high frequency event, it has the potential to blow out the HEPA filters and cause significant damage to the ventilation system and nearby equipment. A Rocky Flats analysis of a catastrophic oxyacetylene bottle explosion assumed an LPF of 0.1. With a MAR of 10000 g, an ARF of 0.1, and an RF of 0.5, the source term becomes 50 g of plutonium released from the stack. Sufficient controls on the use of oxyacetylene welding equipment use must be in place to ensure that the probability of this accident occurring is $<10^{-7}$/yr. It is assumed that 4 people are in the vicinity of the event and that there are 250 workers at the site.

8.1.2.4. Beyond design basis earthquake. The following assumptions are made for a BDBE analysis.

1. The earthquake disables the ventilation system.

2. There is significant structural damage but the building does not totally collapse.

3. A ceiling slab falling onto the glovebox with the most MAR, significantly damaging it.

4. The process cell with the most MAR is located with one wall on the outside of the building.

5. This outside wall cracks and the cracks have a 10 m total length and a 1-mm width.

6. Wind is blowing at 10 m/s.

7. The cracks are located on the lee side of the building.

8. The air pressure in the process cell rises to the average atmospheric pressure after the failure of the ventilation system.

9. The MAR is 10,000 g, the ARF is 0.25, and the RF is 0.5.

10. The process cell dimensions give a floor area of 200 m^2.

The LPF calculation utilizes the methodology and graphical results in Ref. 8-5. This calculation assumes that the pressure difference across the building comes from the dynamic pressure term in the basic integrated energy equation of fluid mechanics, that is the $\rho V^2/2$ term. The process cell is at the average pressure so that one-half of the pressure difference across the building is the driving pressure difference for flow through the cracks. The area and hydraulic diameter of the cracks were calculated, and a friction factor was assumed. This friction factor was converted to a loss coefficient (K-factor), and entrance and exit losses were added. Darcy's equation was then used to solve for the flow rate out of the process cell to the environment. Reynold's number was calculated, the friction factor was recalculated (this case was laminar flow), and the calculation was repeated. Iterations were continued until a convergent solution was obtained for flow rate through the cracks. Once the flow rate through the cracks was obtained, the parameters were obtained to utilize the figures plotting LPF against RF and a reduced flow/floor area parameter. The resulting LPF was 0.02.

Application of these values results in a source term of 25 g of plutonium released at building level. The probability of this event is estimated to be $<10^{-7}$. It is assumed that there are 4 people in the process cell at the time of the earthquake and 250 workers at the site.

8.2. Facility-Specific Potential Mitigating Features.

One of the major goals for the MOX FFF is to achieve a reduced risk to facility personnel and to public heath and safety relative to that associated with similar

functions at the existing nuclear weapons complex. Significant changes exist between the proposed facility and current facilities design criteria and safety standards, which will reduce total risk to the public associated with operation of the facility. These changes include:

1. design to current DOE or NRC structural and safety criteria,

2. smaller throughput, batch size, and inventories of hazardous materials, and

3. elimination of some hazardous materials.

These changes will reduce potential off-site health effects if a significant accidental release were to occur.

The facility will be designed to comply with current federal, state, and local laws; DOE orders or NRC regulations; and industrial codes and standards. This will provide a plant that is highly resistant to the effects of severe natural phenomena, including earthquake, flood, tornado, and high wind. The plant also would be highly resistant to credible events as appropriate to the site, such as fire, explosions, and man-made threats to its structural integrity in the event of any credible accident or event, including aircraft crash, if such an accident is credible at that site.

The facility will be designed and operated to reduce the accumulation of plutonium-bearing scrap, plutonium feed stock processed components, and contamination wastes during manufacturing operations. This reduces the material available during accident scenarios.

The facility design process will comply with the requirements for safety analysis and evaluation in DOE Orders 4700.1 and 5480.23 or NRC NUREG 1513. These orders require that the safety assessment be an integral part of the design process to ensure compliance with all DOE safety criteria by the time the facility is constructed and in operation.

The safety analysis process begins early in conceptual design, with hazards being identified as those having the potential to produce unacceptable safety consequences to workers or the public. As the design develops, failure mode and effects analyses are performed to identify equipment or human failures, and external events that have the potential to release hazardous materials. The events include industrial explosion, fire, earthquake, tornado, flood, spills, and aircraft crash. These potential events become focal points for design changes or improvements to prevent or lessen the likelihood of undesirable accidents. These analyses continue, as the design process progresses, and eventually event tree and fault tree analyses are generated to understand better the estimated frequency of the need for safety class equipment to mitigate the effects of the accident scenarios and to assess the performance of this equipment in accident mitigation. Eventually, the safety

analyses are formally documented in a safety analysis report. This report will be used to document the frequency versus consequence for an entire spectrum of accidents that will help identify design improvements that can maintain the risk envelop within acceptable bounds.

The safety review of this report will be completed, safety issues will be resolved, and commitments will be accepted before initiation of facility construction. A final safety analysis report (FSAR) will be produced that includes documentation of safety-related design changes during construction, and the impact of those changes on the safety assessment. It will also include the results of any safety-related research and development that has been performed to support the safety assessment of the facility. Final approval of the FSAR will be required before the facility is allowed to begin operation.

8.3. Safety Goal.

The facility will provide a level of public health and safety superior to that of the facilities of the existing nuclear weapons complex. DOE has adopted two quantitative safety goals to limit the risks of fatalities associated with its nuclear operations. These goals are the same as those established for nuclear power plants by the NRC, and like the NRC, goals should be viewed as aiming points for performance. The goals are as follows.

1. Risk to the average individual in the vicinity of a DOE nuclear facility for prompt fatalities that might result from accidents should not exceed one-tenth of one percent (0.1%) of the sum of prompt fatalities resulting from other accidents to which members of the population are generally exposed. For evaluation purposes, individuals are assumed to be located within 1 mile of the site boundary.

2. Risk for cancer fatalities within the population in the area of a DOE nuclear facility that might result from operations should not exceed one-tenth of one percent (0.1%) of the sum of all cancer fatality risks resolution from all other causes. For evaluation purposes, individuals are assumed to be located in the area if they are within 10 miles of the site boundary.

9.0. TRANSPORTATION

9.0.1. Transportation Issues. Transportation of plutonium and associated wastes will be subject to government regulations and DOE orders regarding safety and security. Different regulations may apply for different portions of the fuel fabrication operation, which generally starts with surplus PuO_2 and ends with fresh MOX fuel bundles.

To meet security requirements, intersite shipment of the plutonium-bearing material will be by Special Security Transport (SST) throughout the disposition operation.

Transportation safety issues will include criticality control, shielding, and containment of the contents. Allowable limits on each of these issues will be specified by the applicable (or selected) regulation. The composition and form of the radioactive materials to be transported will determine, in part, the applicable portions of the regulations as well as the packaging design.

9.0.2. Regulations

9.0.2.1. National security exemption. For the purpose of national security, 49 CFR 173.7(b) (Ref. 9-1) allows the DOE to ship radioactive material under escort by personnel designated by the DOE, thus waiving the DOT regulations in 49 CFR 170-189 (Ref. 9-2). This exemption, however, is rarely used, and probably will not be used in this program.

9.0.2.2. Other regulations. Other regulations affecting transportation and packaging are as follows.

1. DOE Order 5610.12, Packaging and Off-site Transportation of Nuclear Components, and Special Assemblies Associated with the Nuclear Explosive and Weapon Safety Programs (Ref. 9-3).

2. DOE Order 5610.12, covering most current DOE shipments of nuclear explosives, nuclear components, and special assemblies not carried out under national security exemptions. This order requires that nuclear explosives, nuclear components, and special assemblies be packaged and transported to provide a level of safety at least equal to that provided by packaging and shipping in accordance with regulations applicable to other radioactive materials.

3. 10 CFR 71, Packaging and Transportation of Radioactive Materials (Ref. 9-4). This NRC regulation establishes the requirements for packaging, shipping, and transporting licensed material, and for determining procedures and standards for obtaining NRC approval for packing and shipping fissile material and Type B quantities of other licensed materials. (A quantity of weapon plutonium in excess of ~25 mg constitutes a Type B quantity per 10 CFR 71). This NRC regulation incorporates, by reference, DOT regulation 49 CFR 170-189. Whenever possible, the DOE transports radioactive materials under NRC regulations.

9.0.2.3. Nonconforming shipments. All DOE shipments of material, components, and assemblies must meet the normal conditions of transport requirements of 10 CFR 71. If the shipment does not meet the hypothetical

accident condition stated therein, however, the DOE may require that a risk assessment be performed. The DOE may then authorize the shipment, subject to restrictions determined by the results of the risk assessment. These may include restrictions on the mode of transport, type of vehicles, freight container, or supplementary operational requirements, and may require a DOT exemption from some part of the DOT regulation.

9.0.3. Packaging Design. Packaging and transporting radioactive materials are subject to regulation by various government agencies, such as the NRC, the DOT, or the DOE.

The amount of fissile material contained within a package may be determined by criticality, decay-heat, or radiation dose considerations. The package must remain subcritical during normal and abnormal "accident" conditions of transport, as defined by regulations such as 10 CFR 71.55 or IAEA Safety Series No. 6.7. The amount of fissile material per package and the maximum number of packages per shipment—based on criticality and external radiation-level considerations—will determine the amount of material per shipment. The radiation dose rate must not exceed 2 mSv/h on the outer surfaces or 0.1 mSv/h at any point 2 m outside the outer surfaces of the conveyance used for exclusive shipment.

9.0.3.1. Shielding. Shielding that must be provided by packaging will be dictated by the allowable surface dose rate and the radionuclide contents of the package. Additional shielding will be required for shipments containing americium or PuO_2.

9.0.3.2. Containment. Containment criteria will be determined by the radionuclide content of the package and the form of the material. Material in a nondispersible form, such as metal, is easier to contain than a potentially dispersible form, such as PuO_2 powder.

PuO_2 powder, unless exempted, must be doubly contained (i.e., in a sealed inner container that is wholly within a sealed outer container).

9.0.4. Transportation Route. Transportation of plutonium from one facility to another will be more complex than onsite transportation. Computer codes (Refs. 9-5 and 9-6) can be used to calculate the radiological consequences of incident-free transportation and the accident risk of transporting radioactive materials. The accident risk will be based on the likelihood of an accident, the likelihood of a release of the radioactive materials, how the radioactive material is dispersed in various types of accidents, and the health and environmental effects of dispersing the material.

9.0.5. Transportation Index. For nonexclusive-use shipment of fissile material, the sum of the Transportation Indices (TI) of the packages in the shipment, based on criticality control, must be ≤ 50.

The transport index (TI) for criticality control is obtained by dividing 50 by the allowable number N of the packages that can be stacked together such that:

- five times the allowable number of the packages would be subcritical if the undamaged packages were stacked together in any arrangement and were closely reflected on all sides of the stack by water, or

- two times the allowable number of the damaged packages would be subcritical if the packages that were damaged by the application of a series of hypothetical regulatory tests were stacked together in any arrangement, and were closely reflected on all sides of the stack by water and with optimum interspersed hydrogenous moderation.

9.0.6. General Logistics. Routes between the various plant locations in the recovery operation will determine the general logistics. The TI of a package with fissile contents is based on nuclear criticality control (as determined by regulations). The limited number of packages (and hence the contents) per shipment is based on the TI. The minimum number of shipments for a campaign is simply the amount of material to be shipped divided by the maximum amount of material allowed per shipment. Safeguards and security must be in place to ensure that diversion of plutonium does not occur.

9.1. Intrasite Transportation

All of the receiving, storage, and processing activities would be contained in the facility. Individual buildings would be connected by tunnels or secure transfer hallways. Material would be moved between process areas by carts, forklifts, or a conveyer system. Material would go either directly into the process lines upon receipt, or would go into intermediate storage, depending on the amount of material received and the status of the processing areas. After processing is complete, the material would be placed in intermediate storage before being sent to the reactor for ultimate disposition.

9.2 Intersite Transportation

The facility would receive and send out PuO_2, respectively, as unprocessed oxide and completed MOX fuel bundles. The origination and destination of the products would depend on the final disposition option chosen.

The minimum number of shipments required to ship PuO_2 to the facility (over public roads) depends on the number of packages allowed per shipment. The required rate of shipments will be determined by the operating period of the reactor, the refueling schedule of the reactor, the MOX fuel bundle specifications for the reactor, and the storage capacity at each facility.

Based on the assumptions presented in Section 1.2.1 and the known bundle specifications for all reactors under consideration, Table 9-1 presents the number of fresh-fuel bundles produced per year (which is the average of the number of fresh-fuel bundles shipped annually). Table 9-1 indicates that between 100 and 400 light water reactor bundles, and between 5,000 and 9,000 heavy water reactor bundles will need to be shipped off site annually. Generally speaking, bundle throughput (and hence shipping rate) is inversely proportional to bundle size. For example, the smallest throughput rate of around 100 bundles per year is for the largest (PWR) bundle measuring 20 cm x 380 cm. Conversely, the largest throughput rate of around 9,000 bundles per year is for the smallest (CANDU) bundle measuring 10 cm x 50 cm.

9.2.1. Material Streams. Table 9-2 describes the transportation data for the input materials. Table 9-3 describes the transportation data for the output materials. The shipping containers described are for example only. The actual shipping container will depend on the fuel bundle selected in the final design.

9.2.2. Transportation Security. Intersite shipment of the plutonium-bearing and highly enriched uranium material will be by SST in accordance with 49 CFR 170-189 and DOE Order 5610.12 to minimize the potential for diversion of the materials.

The TI for fissile Class II plutonium contents in the 6M package is a function of the form of the plutonium (metal, alloy, or compound) and the ratio of hydrogen to fissile atoms with all sources of hydrogen in the containment considered.

For a package containing 4.5 kg of plutonium as oxide with a ratio of 3 hydrogen atoms to fissile atoms, the TI is 0.5 per 49 CFR 173.417. The SST can carry a maximum of 35, 30-gal. DOT-spec 6M packages (with a gross weight of 300 lb each), based upon gross vehicle weight and axle loading limitations. If the external radiation level remains below the regulatory limit (which is almost certain), the mass of plutonium (in oxide form) per shipment would be about 160 kg. Thus transport of 50 Mg of plutonium as oxide would require about 310 shipments. A 20-yr campaign would require about 16 shipments/yr. The number of shipments of plutonium metal would be the same because the limiting factor is the SST cargo carrying capacity based upon weight and axle loading limitations. It is possible, although not likely, that thermal considerations could lower the number of packages for each shipment.

9.2.3. Waste Transportation. All off-site shipments of radioactive waste from the facility, including both low-level waste and TRU, must be packaged and shipped in accordance with 10 CFR 71.

TABLE 9-1
FUEL BUNDLE THROUGHPUT CHARACTERISTICS FOR VARIOUS REACTOR TYPES

Reactor Type	Bundle throughput per year[a]	Number of MOX pins per Bundle	Pin Throughput per year	Bundle Dimensions (cm x cm)[b]	Pin Dimension (cm x cm)[b]
Existing					
GE-full MOX BWR	410	60	24600	14 x 406	1.25 x 406
W-full MOX PWR	110	264	29000	22 x 385	0.95 x 385
ABB/CE-full MOX System 80	121	236	30400	20 x 380	0.97 x 380
CANDU-reference MOX	8700	30	261000	10 x 50	1.3 x 50
CANDU-CANFLEX MOX	5410	35	189350	10 x 50	1.15 x 50
Evolutionary					
GE-MOX ABWR	290	60	17400	14 x 406	1.25 x 406
ABB/CE-MOX System 80+	106	236	25000	20 x 380	0.97 x 380
W-MOX PDR 600	96	264	25300	22 x 385	0.95 x 385
W-MOX PDR 1400	96	264	25300	22 x 385	0.95 x 385

[a] From reference 1-2.
[b] Characteristic width x height of a fuel bundle or fuel rod.

TABLE 9-2
INTERSITE TRANSPORTATION DATA FOR INPUT MATERIALS

Reactor Type	PuO2					
	Pu Throughput (MT/yr)	Reactor Operating Period (Yrs)	Average number of packages shipped per year	Estimated number of packages shipped over the life of the project	Number of shipments per year	Number of shipments over the life of the project
Existing						
GE-full MOX BWR	2.2	23	489	11244	14	321
W-full MOX PWR	2.2	23	489	11244	14	321
ABB/CE-full MOX System 80	2.2	23	489	11244	14	321
CANDU-reference MOX	2	25	444	11111	13	317
CANDU-CANFLEX MOX	2	25	444	11111	13	317
Evolutionary						
GE-MOX ABWR	2.9	17	644	10956	18	313
ABB/CE-MOX System 80+	2.9	17	644	10956	18	313
W-MOX PDR 600	2.9	17	644	10956	18	313
W-MOX PDR 1400	2.9	17	644	10956	18	313

Reactor Type	UO2					
	MOX Throughput (MT/yr)	UO2 Input Required (MTHM/yr)	Average number of packages shipped per year	Estimated number of packages shipped over the life of the project	Number of shipments per year	Number of shipments over the life of the project
Existing						
GE-full MOX BWR	73.2	71.03	32	743	6.5	148.5
W-full MOX PWR	50.7	48.52	22	507	4.4	101.5
ABB/CE-full MOX System 80	51.4	49.23	22	515	4.5	102.9
CANDU-reference MOX	131.6	129.60	59	1473	11.8	294.5
CANDU-CANFLEX MOX	74.1	72.10	33	819	6.6	163.9
Evolutionary						
GE-MOX ABWR	53.2	50.26	23	388	4.6	77.7
ABB/CE-MOX System 80+	43.6	40.66	18	314	3.7	62.8
W-MOX PDR 600	44.6	41.66	19	322	3.8	64.4
W-MOX PDR 1400	44.6	41.66	19	322	3.8	64.4

TABLE 9-3
INTERSITE TRANSPORTATION DATA FOR FUEL BUNDLES

	Fuel Bundles						
Reactor Type	Bundle throughput per year	Reactor Operating Period (Yrs)	Number of Bundles per Package	Average number of Packages shipped/year	Estimated number of packages shipped over the life of the project	Number of shipments per year	Number of shipments over the life of the project
Existing							
GE-full MOX BWR	410	23	4	103	9430	103	2358
W-full MOX PWR	95	23	2	48	2185	48	1093
ABB/CE-full MOX System 80	105	23	2	53	2415	53	1208
CANDU-reference MOX	8700	25	7	1243	31071	26	647
CANDU-CANFLEX MOX	5410	25	7	773	19321	16	403
Evolutionary							
GE-MOX ABWR	290	17	4	73	4930	73	1233
ABB/CE-MOX System 80+	105	17	2	53	1785	53	893
W-MOX PDR 600	95	17	2	48	1615	48	808
W-MOX PDR 1400	95	17	2	48	1615	48	808

10.0. REFERENCES

1-1. National Academy of Sciences, Committee on International Security and Arms Control, *Management and Disposition of Excess Weapons Plutonium*, National Academy Press, Washington (1994).

1-2. U.S. Congress, Office of Technology Assessment, *Dismantling the Bomb and Managing Nuclear Materials*, U.S. Government Printing Office document OTA-0-572, Washington (September 1993).

1-3. Chow, B.G., and K. A. Solomon, *Limiting the Spread of Weapon-Usable Fissile Materials*, RAND, Santa Monica, CA (1993).

1-4. American Nuclear Society, Protection and Management of Plutonium, American Nuclear Society document, ANS order number: 690047, (August 1995).

1-5 Turinsky, P.J. et al., *West European Nuclear Power Generation Research and Development*, Science Applications International Corporation (SAIC) document PB92-173053 (September 1991).

1-6. Rome, M., M. Salvatores, J. Mondot, and M. LeBars,"Plutonium Reload Experience in French Pressurized Water Reactors," *Nuclear Technoloty*, Vol. 94, pp. 87-98 (Apr. 1991).

1-7. MacLeod,H.M.,and G. Yates, "Development of Mixed-Oxide Fuel Manufacture in the United Kingdom and the Influence of Fuel Characteristics on Irradiation Performance," *Nuclear Technology*, Vol. 102, pp. 3- 17 (Apr. 1993).

1-8. Krellmann, J.,"Plutonium Processing at the Siemens Hanau Fuel Fabrication Plant," *Nuclear Technology*, Vol. 102, pp. 18- 28 (Apr. 1993).

1-9. Haas, D, A. Vandergheynst, J. Van Vliet, R. Lorenzelli, and J.-L. Nigon, "Mixed-Oxide Fuel Fabrication Technology and Experience at the Belgonucleaire and CFCa Plante and Further Developments for the MELOX Plant," *Nuclear Technology*, Vol. 102, pp. 60- 82 (Apr. 1993).

1-10. Goll, W., H.-P. Fuchs, R. Manzel, and F. U. Schlemmer, "Irradiation Behavior of UO_2/PuO_2 Fuel in Light Water Reactors," *Nuclear Technology*, Vol. 102, pp. 29- 46 (Apr. 1993).

1-11. Deramaix, P, D. Haas, and J. Van de Velde, "In-Pile performance of Mixed-Oxide Fuel with Particular Emphasis on MIMAS Fuel," *Nuclear Technology*, Vol. 102, pp. 47-53 (Apr. 1993).

1-12. *DOE Plutonium Disposition Study, Analysis of Existing ABB-CE light Water Reactors for the Disposition of Weapons-Grade Plutonium,* Combustion Engineering, Inc., for DOE contract DE-AC03-93 SF19682 (June 1994).

1-13. *Plutonium Disposition Study,* Westinghouse Electric Corporation document DOE/SF/19683–5, for DOE contract DE-AC03-93SF19683 (April 1994).

1-14. *Study of Plutonium Disposition Using the GE Advanced Boiling Water Reactor (ABWR),* General Electric Nuclear Energy report NEDO-32351, for DOE contract DE-AC03-93SF19681 (April 1994).

1-15. *Study of Plutonium Disposition Using Existing GE Boiling Water Reactor ,* General Electric Nuclear Energy report NEDO-32361, for DOE contract DE-AC03-93SF19681 (June 1994).

1-16. *Plutonium Consumption Program CANDU Reactor Project,* AECL Technologies Report for DOE contract DE-AC03-93SF20218 (July 1994).

1-17. "Fissile Material Disposition Program Functional Requirements" document, Rev. 0, Issue C (January 1995).

1-18. S. R. Greene, G. Holman, G. A. Murphy, and R. T. Primm III, "Compilation of Plutonium Disposition Reactor Fuel Specifications-Rev. 0," Oak Ridge National Laboratory, report no. ORNL/MD/LTR-1 (December 1994).

7-1. "Final Generic Environmental Statement on the Use of Recycle Plutonium in Mixed Oxide Fuel in Light Water Cooled Reactors," NUREG-0002, Vol. 3, Sec. IV (August 1976) pg. IV D-27 .

8-1. "Final Safety Analysis Report for the Plutonium Handling Facility, TA-55," Los Alamos National Laboratory unnumbered report (1979).

8-2. "Safety Analysis Report, Nuclear Materials Storage Facility," Los Alamos National Laboratory report SAR-90-1F (April 1990).

8-3. J. C. Elder, J. M. Graf, J. M. Dewart, T. E. Buhl, W. J. Wenzel, L. J. Walker, and A. K. Stokes, "A Guide to Radiological Accident Considerations for Siting and Design of DOE Nonreactor Nuclear Facilities," Los Alamos National Laboratory report LA-10294-MS (January 1986).

8-4. DOE Handbook, "Airborne Release Fractions/Rates and Respirable Fractions for Nonreactor Nuclear Facilities," U.S. Department of Energy report DOE-HDBK-3010-94 (October 1994).

8-5. "U.S. Department of Energy Defense Programs Safety Survey Report," U.S. Department of Energy report DOE/DP/70056-H1, Vol. 1, also SAIC 93-1181 (November 1993).

9-1. 49 CFR 173.7 (b), U.S. Department of Transportation, Washington, DC.

9-2. 49 CFR 170-189, U.S. Department of Transportation, Washington, DC.

9-3. DOE Order 5610.12, "Packaging and Transportation of Nuclear Explosives," Nuclear Components and Special Assemblies, U.S. Department of Energy, Washington, DC.

9-4. 10 CFR 71, "Packaging and Transportation of Radioactive Material," U.S. Nuclear Regulatory Commission, Washington, DC.

9-5. Y. C. Yuan, R. Y. Chen, D. L. Lepoire, and R. Rothman, "RISKIND, A Computer Program for Calculating Radiological Consequences and Health Risks from Transportation of Spent Nuclear Fuel," Argonne National Laboratory report, ANL/EAIS, Rev. O (1993).

9-6. K. T. Nuehauser and F. L. Kanipe, "RADTRAN 4 User Guide, Vol. 3," Sandia National Laboratories report (1992).

11.0. GLOSSARY

11.1. Unique Terms

Batch: One lot of material that passes through the processing stages as a single unit of material.

Blending: Mixing materials to achieve the desired composition and uniformity of material.

Criticality: Momentary achievement of a nuclear chain reaction resulting in an intense burst of radiation.

Depletable Neutron Absorbers: Elements whose neutron-absorbing characteristics assist in nuclear reactor control. These can be fabricated directly into the fuel, coated on the fuel, or placed in the reactor coolant depending upon the specific reactor design.

Enrichment: Weight percent of plutonium (or ^{235}U) as a fraction of total heavy metal.

Grinding: Applying abrasion to the outer surfaces of pellets to produce pellet sizes within the required specifications.

Heavy Metal: Elements of atomic mass equal to or greater than uranium. In this document, this typically refers to a combined mass of plutonium and uranium.

Ion Exchange: Chemical process by which chemical compounds are altered to achieve desired forms.

Metric Ton: 1000 kg.

Milling: Physical deformation of material to produce a specified particle size.

Oxide: The chemical compounds PuO_2 (plutonium oxide) and UO_2 (uranium oxide).

Pressing: Consolidation of the mixed-oxide powder to the desired pellet density and cohesion.

Scrap: Material left over from the fabrication process and recycled back into the system.

Screening: Passing of material through a sieve to screen out particles of excessive size.

Sintering: Heating of the fuel pellets to join the oxide particles. Diffusion of atoms to points of contact causes bridges to form between particles. Further diffusion eventually fills all remaining voids.

SNM: Special nuclear material that could possibly be used in the construction of a nuclear device.

Throughput: The rate of material processing in the facility.

11.2 Acronyms and Abbreviations

ALARA	As low as reasonably achievable
ASHRAE	American Society of Heating, Refrigeration, and Air Conditioning engineers
BWR	Boiling water reactor
CANDU	Canadian heavy water reactors (CANadian Deuterium-Uranium)
CAS	Central alarm station
CCTV	Closed-circuit television
CFE	Critical flood elevation
CFR	Code of federal regulations

DBE	Design basis earthquake
DOE	Department of Energy
DOT	Department of Transportation
EDE	Effective dose equivalent
FSAR	Final Safety Analysis Report
HEPA	High efficiency particulate air
HVAC	Heating, ventilation, and air conditioning
IAEA	International atomic energy agency
IEEE	Institute of Electrical and Electronic Engineers
LAA	Limited access area
LLW	Low level waste
MBA	Material Balance Area
MC&A	Material control and accountability
MOX	Mixed-oxide
MT	Metric ton
MTHM	Metric ton heavy metal
NAA	Normal access area
NDA	Non destructive analysis
NRC	Nuclear Regulatory Commission
PA	Protected area
PAP	Personal Assurance Program
PEIS	Programmatic Environmental Impact Statement
PIDAS	Perimeter intrusion detection alarm system
PSAP	Personnel security assurance program
PWR	Pressurized water reactor
QA	Quality assurance
RAA	Restricted access area
RCRA	Resource Conservation and Recovery Act
REACTS	Radiation Emergency Assistance Center/Training Site
S&S	Safeguards and security
SAR	Safety analysis report
SNM	Special nuclear material
SRP	Standard Review Plan
SSC	Structures, systems, and components
TI	Transport index
TRU	Transuranic
UCRL	University of California Radiation Laboratory
UPS	Uninterruptible power supply
VA	Vulnerability assessment
WIPP	Waste Isolation Pilot Plant