UNCLASSIFIED 000812

UNIQUE DOCUMENT # SAC20011983000

SECRET SECURITY INFORMATION

RS-3466-(20147)

~~SC-5098 (8p)~~

COPY A

DEPARTMENT OF ENERGY DECLASSIFICATION REVIEW
1ST REVIEW-DATE: 9/97
AUTHORITY: DC DD
NAME: GUNNAR CRAVER
2ND REVIEW-DATE: 11/17/98
AUTHORITY: A DD
NAME: [illegible]
DETERMINATION [CIRCLE NUMBER(S)]
1. CLASSIFICATION RETAINED
2. CLASSIFICATION CHANGED TO:
3. CONTAINS NO DOE CLASSIFIED INFO
4. COORDINATE WITH:
5. CLASSIFICATION CANCELED
6. CLASSIFIED INFO BRACKETED
7. OTHER (SPECIFY):

INVENTORIED
SEP 14 1965
3428-3

DEVELOPMENT SPECIFICATION FOR XMC-364 (U)

JUNE 5, 1953

J. D. GRENKO
Specification Engineer

B. J. CARR
Design Engineer

ELLIS A. TURNER, JR.
Spec. Div. Supervisor

T. S. CHURCH
Engr. Dept. Manager

RESTRICTED DATA

This document contains restricted data as defined in the Atomic Energy Act of 1946. Its transmittal or the disclosure of its contents in any manner to an unauthorized person is prohibited.

SPECIFIED DISTRIBUTION ONLY

INVENTORIED
AUG 6 1964
3427-1

THIS DOCUMENT CONSIST OF 29 PAGES

NO. 4 OF 35 COPIES, SERIES A

Sandia Corporation
CONTRACTORS FOR U.S. ATOMIC ENERGY COMMISSION
ALBUQUERQUE • NEW MEXICO

SECRET SECURITY INFORMATION

UNCLASSIFIED

97SA20C000205

Listing of Pages Effective With Document Change #2

The following is a list of the page numbers and respective issue dates which are effective with Document Change #2 of this specification.

An issue date is not shown on any page of original issue.

Page No.	Issue Date	Page No.	Issue Date
1	Original	15	Original
1a	6-22-53	16	Original
2	Original	17	Original
3	Original	18	Original
4	Original	19	Original
5	Original	20	Original
6	Original	21	Original
7	Original	22	Original
8	Original	23	6-22-53
9	Original	24	Original
10	Original	25	Original
11	Original	26	Original
12	Original	27	6-11-53
13	Original	28	Original
14	Original	29	Original

Changes from previous issue are flagged with an asterisk in the right margin on each page.

SECRET UNCLASSIFIED

DEVELOPMENT SPECIFICATION
FOR
XMC-364

1 PURPOSE AND CLASSIFICATION

1.1 Purpose.--The XMC-364 is a modulated neutron source which is designed for use as an external initiator of implosion type weapons.

2 APPLICABLE SPECIFICATIONS AND OTHER PUBLICATIONS

2.1 Applicable Specifications. -- The following specifications of the issue and amendment designated (amendment number is given in parentheses after the specification designation) form a part of this specification to the extent indicated in the text and on the procuring agency drawings:

	Federal Specifications	Custodian
QQ-P-416(1)	Plating, Cadmium (Electrodeposited)	Fed
QQ-S-571b	Solder, Soft (Tin,Tin-Lead,Lead-Silver)	Fed
QQ-Z-325	Zinc Plating (Electrodeposited)	Fed
QQ-S-561(Z)	Solder, Silver	Fed
TT-C-595(1)	Colors: (for) Ready Mixed Paints	Fed
TT-V-119	Varnish, Spar, Phenolic-Resin	Fed

2.1.2	Military Specifications	Custodian
MIL-E-1B	Electron Tubes	SIG & SH
MIL-R-22A	Resistors, Variable (Wire-Wound, Power Type)	SH
MIL-T-27(3)	Transformers and Inductors (Audio, Power and Pulse)	SIG & SH
MIL-R-93A	Resistors, Accurate, Fixed, Wire-Wound (Accurate)	SIG
MIL-P-116A	Preservation, Methods of	O & USAF
MIL-V-173A	Varnish, Moisture-and Fungus-Resistant for the Treatment of Communications, Electronic, and Associated Electrical Equipment	SH

UNCLASSIFIED SECRET

	Military Specifications	Custodian
MIL-M-3171	Magnesium Alloy, Processes for Corrosion Protection of	O
MIL-G-3278	Grease: Aircraft and Instruments (for Low and High Temperatures)	USAF
MIL-S-5002(1)	Surface Treatments (except Priming and Painting) for Metal and Metal Parts in Aircraft	A
MIL-E-5272A	Environmental Testing, Aeronautical and Associated Equipment (General Specification for)	USAF & A
MIL-C-5541(1)	Chemical Films for Aluminum and Aluminum Alloys	USAF & A
MIL-X-6141	X-Ray Laboratories: Procedure for the Certification of (for inspection of Aircraft Components)	USAF & A
MIL-I-6181	Interference Limits and Tests; Aircraft Electrical and Electronic Equipment	USAF
MIL-P-6859	Plating, Nickel	USAF & A
MIL-P-6871	Plating, Chromium	USAF & A
MIL-S-6872	Soldering Process, General Specification for	USAF & A
MIL-P-6889A(3)	Primer; Zinc Chromate, for Aircraft Use	A
MIL-B-7883	Brazing of Steels, Copper, Copper Alloys, and Nickel Alloys	SIG
MIL-E-11237	Enamel, Synthetic, Lustreless	O
MIL-E-15090A (Ships)	Enamel, Equipment, Light-gray (Formula No. 111)	SH

2.1.3	Joint Army-Navy Specifications	Custodian
JAN-R-11(4)	Resistors, Fixed Composition	SIG & SH
JAN-C-25(5)	Capacitors, Direct-Current, Paper Dielectric Fixed (Hermetically Sealed in Metal Case)	SIG & SH

	Joint Army-Navy Specifications	Custodian
JAN-R-26A(3)	Resistors, Fixed, Wire-wound, Power Type	SH
JAN-R-94(2)	Resistors, Variable, Composition	SIG & SH
JAN-L-73	Lacquer Enamel, Lustreless	SH & O
JAN-C-76(4)	Cable (Hook-up Wire), Electric Insulated, Radio and Instrument	SIG
JAN-T-152	Treatment, Moisture-and Fungus-Resistant, of Communications, Electronic and Associated Electrical Equipment:	SIG
JAN-R-184(3)	Resistors, Fixed, Wire-Wound	USAF
JAN-R-94(2)	Resistors, Variable, Composition	SIG & SH
JAN-I-225	Interference Measurement, Radio, Methods of, 150 Kilocycles to 20 Megacycles (for Components and Complete Assemblies.)	SH
JAN-C-490	Cleaning and Preparation of Ferrous Metal Surfaces for Organic Protective Coatings	O
2.1.4	Air Force-Navy Aeronautical Specifications	Custodian
AN-QQ-A-696a	Anodic-Films; Corrosion-Protective (for) Aluminum Alloys	USAF
2.1.5	U.S. Army Specifications	Custodian
2-89-A	Flux, Soft Soldering	USAF
2.1.6	U.S. Air Force Specifications	Custodian
7201	Test Procedure, Shock, Medium Impact	USAF
2.1.7	Sandia Corporation Specifications	Custodian
G-3077	Gold Plate, No. 3077 Finish	SC
G-3078	Silver Plate, No. 3078 Finish	SC
SCS-2	Classification and Mechanical Testing of Castings	SC
SCS-3	Inspection of Castings	SC
SCS-4	General Requirements for Electrical Cable	SC
SC-5107 (Sp)	Electronic Timer	SC

2.1.8	Sandia Corporation Drawings	Custodian
DS(5330)24289	Initial Signal Wave Form	SC
DS(5330)24053	Geometry	SC
DS(5330)24288	XMC-364 Circuit Diagram	SC

2.4 Other Publications. -- The latest issues of the following publications form a part of this specification to the extent indicated in the text:

Publication	Custodian
USAF Specification Bulletin No. 23 Material and Process Specifications	USAF
ANA Bulletin No. 143-Specifications and Standards-Use of	USAF

2.5 Ordering Information. -- The custodians of the specifications and publications listed above and from whom copies may be obtained are listed below. Custodian symbols indicated in 2 correspond to those indicated in the following listing. When ordering give both title and number of the specification or publication and reference the prime contract number of the Sandia Corporation.

Custodian Symbol	Name of Custodian	Address of Custodian
USAF	Air Force	Commanding General Wright Air Development Center Attn: WCXSP Wright-Patterson Air Force Base Dayton, Ohio
A	Bureau of Aeronautics	Chief, Bureau of Aeronautics Technical Data Division Department of the Navy Washington, D.C.
FED	Federal	Superintendent of Documents U.S. Government Printing Office Washington 25, D.C.
O	Ordnance Corps	Office, Chief of Ordnance Washington 25, D.C.
SH	Bureau of Ships	Chief,Bureau of Ships Attn: Code 357 Department of the Navy Washington 25, D.C.
SC	Sandia Corporation	Sandia Corporation Attn: Purchasing Agent Sandia Base Albuquerque, New Mexico
SIG	Signal Corps	Commanding Officer Signal Corps Procurement Agency Attn: Technical Records Branch 2800 South 20th Street Philadelphia 45 Pennsylvania

3 REQUIREMENTS

3.1 Precedence

3.1.1 Precedence of this Specification and Related Documents. -- Whenever their requirements are in conflict, this specification and related documents shall take precedence in the following order:

a. The contract

b. This specification

c. Sandia Corporation drawings

d. Applicable specifications and standards

3.1.2 Precedence of Standard Materials, Parts, and Processes. -- Any material or process not covered herein shall conform with a specification listed in USAF Specification Bulletin No. 23. If the specifications listed in Bulletin No. 23 are not applicable, the material or process shall be selected in accordance with the order of precedence established by ANA Bulletin No. 143. Any standard part not covered herein shall be chosen to comply with specifications and standards selected in the order of precedence set forth in ANA Bulletin No. 143.

3.1.3 Precedence of Requirements of Military Organizations. -- When referenced government publications stipulate different requirements for several military organizations, the requirements of those organizations shall take precedence in the following order: U.S. Air Force, Bureau of Aeronautics, Bureau of Ordnance, U.S. Army Ordnance Department, Bureau of Ships, U.S. Army Signal Corps.

3.1.4 Requirements for Tests or Services. -- Whenever referenced government publications stipulate services to be performed by an agency other than Sandia Corporation, the assistance of Sandia Corporation in securing such service may be obtained, if necessary.

3.2 Certification and Substitution

3.2.1 Certification. -- The vendor shall certify in writing to the Sandia Corporation that the materials, processes and/or parts used in the assembly conform to the applicable specifications.

3.2.2 Substitution. -- No substitution for parts, materials, processes or designs, specifically called out herein, shall be made without the prior written approval of the Sandia Corporation. Request for approval of substitutions shall provide evidence that the substitution is equal or superior to the specified item. The Sandia Corporation may require samples from which the suitability of the substitution can be determined.

3.3 Materials

3.3.1 Inflammable Materials. -- Inflammable materials which will ignite or explode from an electrical spark or from heating should not be used. If materials which will ignite must be used, they shall not continue to burn after the removal of flame. Fireproof and explosion-proof insulation shall be used wherever a fire hazard exists.

3.3.2 Toxic and Corrosive Fumes. -- As installed in the XMC-364 and under the environmental conditions specified in 3.8, the materials shall not liberate gases which combine with the atmosphere to form corrosive acid or corrosive alkali, nor shall they liberate toxic fumes when burned. Any gas used to fill or pressurize any components, subassemblies or general assemblies shall not combine with the atmosphere to form corrosive acids or alkalies, and shall not form toxic or corrosive fumes when burned or decomposed.

3.3.3 Fungus Inert Materials. -- Materials which are not nutrients for fungus shall be used to the greatest extent practicable.

3.3.3.1 Fungus-Nutrient Properties of Materials. -- The following materials are arranged in groups in the order of their resistance to fungus growth. Materials in Group Ia should be used in preference to those in Group Ib. Materials in Group II shall not be used unless their other desired properties cannot be obtained from materials in Group I. If materials in Group II are used, they shall be treated in accordance with 3.3.3.2. The use of materials other than those in Group I requires the prior written approval of the Sandia Corporation.

Group Ia

Ceramics
Glass
Glass-silicone
Melamines (except formaldehydes)
Metals
Mica
Monochlorotrifluorethylene
Nylon
Polyethylene (unplasticized)
Polymethylemthacrylate
Polystyrene
Polyvinylidiene chloride
Silicones (pure)

Group Ib

Cellulose acetate
Cellulose acetate butyrate
Diallylphthalate
Ethyl cellulose
Phenolics laminated with glass fibers or nylon
Phenolics (mica-,glass-, or asbestos-filled)
Phenolics (without fillers)
Polyvinyl chloride (Dioctylphthalate or dibutylphthalate plasticizers preferred)
Polyester resins
Rubber (synthetic and natural)

Group IIa

Cotton or linen cloth laminates
Phenolics filled with cotton fiber, wood or wood flour
Melamine formaldehyde
Vinyl acetate

Group IIb

Cellulose nitrate
Cork
Cotton webbing
Hair and wool felt
Leather
Paper
Regenerated cellulose
Wood and wood products

3.3.3.2 Fungus Resistant Treatments. -- If materials in Group IIa are used, they shall be coated with one coat of varnish per TT-V-119. If materials in Group IIb are used they shall be treated by a process approved by the Sandia Corporation.

3.3.4 Hygroscopic Materials. -- The water absorption characteristic of any materials used in the XMC-364 shall be the minimum for that class of material having the other desired characteristics.

3.3.4.1 Treatment of Hygroscopic Materials. -- Materials used in the XMC-364 which will absorb more than 1 per cent of their weight of water when tested in accordance with 4.2.9 shall have their surfaces coated with one coat of varnish, per TT-V-119. This requirement does not apply to insulation sleeving used on wire and cable.

3.3.4.2 Treatment of Machined Plastics. -- All machined surfaces of parts that are fabricated from plactics containing laminations or fillers, shall be coated with one coat of varnish, per TT-V-119.

3.3.5 Corrosion Resistance. -- All materials used shall be corrosion resistant or shall be treated to resist corrosion and shall cause a minimum of corrosion of other materials in the XMC-364 under the conditions specified in 3.8.

3.3.5.1 Additional Protection of Base Metals. -- Gold, nickel, chromium, rhodium, corrosion-resistant steel (12 per cent or more chromium), copper, tin, lead-tin alloys, or sufficiently thick platings of these metals are satisfactory without additional protection or treatment other than buffing or cleaning. In general, aluminum, magnesium, iron, steel, cadmium, and zinc require additional protection in accordance with 3.5.2.

3.3.5.2 Dissimilar Metals. -- Dissimilar metals shall not be used in contact unless suitably protected against electrolytic corrosion. When it is necessary that any combination of dissimilar metals be assembled, an interposing material compatible with each shall be used. Dissimilar metals are defined as follows:

a. Grouping of metals

Group I	Group II	Group III	Group IV
Magnesium alloys	Aluminum	Zinc	Copper and its alloys
	Aluminum alloys	Cadmium	Nickel and its alloys
	Zinc	Steel	Chromium
	Cadmium	Lead	Stainless steel
		Tin	Gold
			Silver

b. If metals within any one group are in contact, they shall be considered as similar. If a metal of one group and a metal of any other group are in contact, they shall be considered as dissimilar.

c. Unless their use is specifically approved by the Sandia Corporation, all other metals shall be considered dissimilar with respect to any of the metals listed above.

d. The above grouping is intended to serve as a guide in selecting materials to be used in electromechanical equipment and shall not be construed as waiving requirements herein as to corrosion resistance of components and assemblies. In particular, care shall be exercised in using aluminum alloys against each other or against dissimilar metals as defined herein.

e. When reference is made to a metal in a particular group, the reference applies to the metal on the surface of the part, that is, zinc means zinc castings as well as zinc electroplate, zinc hot dip, or zinc metal spray.

f. Dissimilar metal contact does not apply to contact between metals which interfuse at their interface when such a process must be employed in fabrication. For instance soldering of copper wires, the use of pretinned copper parts and the sweat-soldering of sheet metal parts to obtain a sealed enclosure are acceptable.

g. Different metals in contact, even though similar, shall be employed in assemblies in such a manner that the smaller part is cathodic (protected) and the larger part is anodic (corroded) if any corrosion takes place.

3.3.6 Lubricants. -- Lubricants used shall cause no degradation of performance of the XMC-364 or deterioration of other materials in the XMC-364 under conditions of 3.8.

3.3.7 Cadmium. -- Cadmium shall not be used in enclosures with phenolic resins.

3.4 Standard Parts. -- Unless otherwise specified, standard parts shall be chosen in accordance with 3.1.2 and they shall meet the requirements of this specification.

3.4.1 Electrical and Electronic Parts. -- The vendor shall submit to the cognizant Sandia Corporation design engineer two copies of a list of the electrical or electronic parts he intends to use in the assembly. This list should be submitted as soon as his design is established. If any non-standard parts are used in lieu of MIL-JAN-AN parts, the contractor shall submit his reasons for their use together with their specified characteristics. Samples of these parts shall be submitted to Sandia Corporation for test and approval, if and when requested by the design engineer. Should any changes occur during the development stage in types of parts previously submitted in the list for approval, the cognizant design engineer's approval shall be obtained.

3.5 Workmanship. -- Materials or parts used in the XMC-364 shall be processed by workers skilled in each process involved or under their direct supervision. Processes which are used that are not covered herein shall conform with recognized practices associated with the highest quality of workmanship and product of the particular trade.

3.5.1 Forming of Parts

3.5.1.1 Forming of Metal Parts. -- All methods of forming metal parts shall be such as to ensure the quality of performance required in 3.7 under conditions as indicated in 3.8.

3.5.1.2 Forming of Plastics. -- Laminated plastics shall be formed so that the laminate is securely bonded in the plastic material. There shall be no parting of the laminate and the plastic or degradation of the formed plastic when subjected to the conditions of 3.8 or any natural combinations of these conditions.

3.5.2 Finishes. -- Parts of the XMC-364 which are not covered by subsidiary specifications and which have protective finishes shall be resistant to corrosion; there shall be no destructive corrosion of such parts after test in accordance with 4.2.5. Destructive corrosion shall be construed as being any type of corrosion which in any way interferes with mechanical and electrical performance. Bright finishes shall not be used on external parts. When cleaning operations on metal parts are not specified in detail, they shall be in accordance with commercial practices which will not cause subsequent destructive corrosion.

3.5.2.1 For Magnesium. -- The surfaces of magnesium and magnesium alloy parts shall be treated in accordance with MIL-M-3171, Type III or IV.

3.5.2.2 For Aluminum. -- The surfaces of aluminum or aluminum alloy parts shall be anodized in accordance with AN-QQ-A-696a. When such parts contain steel inserts and cannot be anodized, they shall receive a chemical treatment in accordance with MIL-C-5541 and be painted in accordance with 3.5.2.7.

3.5.2.3 For Corrosion- and Heat-Resistant Steel. -- The surfaces of corrosion- and heat-resistant steel shall be passivated in accordance with MIL-S-5002.

3.5.2.4 For Other Ferrous Alloys. -- The surfaces of ferrous alloys, other than corrosion- and heat-resistant steel, which are to be painted shall be treated in accordance with JAN-C-490, Grade I, prior to painting.

3.5.2.5 For Copper and Copper Alloys. -- The surfaces of copper or copper alloys require no protective coating or finish. This requirement does not exclude consideration of their galvanic reaction with other metals and consequent use of interposed materials to reduce this reaction.

3.5.2.6 Plating. -- Plating shall be done in accordance with 3.3.5 with the following applicable specifications for the plating materials:

a.	Cadmium	QQ-P-416	(Type II or III)
b.	Zinc	QQ-Z-325	(Type II or III)
c.	Nickel	MIL-P-6859	(Type II only)
d.	Chromium	MIL-P-6871	(Type II only)
e.	Gold	G-3077	
f.	Silver	G-3078	

3.5.2.7 Painting. -- Surfaces of magnesium, aluminum and ferrous alloys other than corrosion- and heat-resistant types shall receive an organic coating in addition to the treatment specified for the particular metal involved. Zinc and cadmium plated surfaces that will not withstand the corrosive conditions of 3.8 after suitable chemical treatments specified under 3.5.2.6 shall be given a pre-painting treatment as specified under 3.5.2.6 and shall receive an organic coating. However, organic coatings on a surface or portions of a surface that would interfere with mechanical or electrical operation shall not be applied.

Exterior and interior surfaces of the materials specified herein shall be primed. Exterior surfaces of these materials shall be painted. Painting of interior surfaces is optional.

3.5.2.7.1 Primer. -- Two cross coats of zinc chromate primer, per MIL-P-6889A shall be applied to surfaces specified above.

3.5.2.72 Paint. -- One coat of lacquer enamel, per JAN-L-73, Grade I or III, shall be applied to surfaces specified above. The color of the enamel shall be Gray, Color No. 2630, per TT-C-595.

3.5.3 Screw Assemblies. -- No self-tapping screws shall be used except for indentification plates. All screws shall be secured by self-locking nuts, lock-washers, or safety wires. When tapping is necessary, the tapped material shall be of ample thickness to assure adequate strength of the threads. Where aluminum alloys or alluminum is tapped for screws larger than number 4, suitable steel inserts shall be provided. All screws, studs, spade bolts, and nuts shall be AN hardware of corrosion-resisting steel, zinc plated steel or cadmium plated steel except when used as electrical connections. Screws shall be tight which means that the screw cannot be appreciably tightened further without damage or injury to the screw threads. The final criteria shall be the ability of the assembly to meet the requirements of 3.7 when subjected to the conditions of 3.8.

3.5.4 Riveting. -- Riveting operations shall be carefully performed to ensure that rivets are tight and satisfactorily headed.

3.5.5 Clean-Up. -- The XMC-364 shall be throughly cleaned of metal chips and other foreign materials after final assembly. Burrs and unnecessary sharp edges shall be removed from all parts prior to assembly.

3.5.6 Soldering. -- Solder joints shall be such that both a positive electrical and a strong mechanical connection is assured. Soft soldering shall be done in accordance with MIL-S-6872, with the exception of the solder and flux limitations specified in 3.5.6.3.

3.5.6.1 Mechanical Strength. -- No assembly of soldered joints shall depend solely on soft solder for mechanical strength. Joints shall be mechanically secure before soldering, except when mechanically secure connection of small parts is impracticable.

3.5.6.2 Soft Solder. -- Soft solder shall be in accordance with QQ-S-571b, composition Sn70, Sn60, or Sn50. Compositions are indicated in the order of preference.

3.5.6.3 Solder Flux. -- Only rosin or rosin and alcohol in accordance with U.S. Army Sepcification 2-89A, Grade I shall be used as a flux for soft soldering or for cleaning soldering irons.

3.5.7 Wiring

3.5.7.1 Hook-Up Wire: -- All hook-up wire shall conform to JAN-C-76, except as indicated by the responsible engineer of the Sandia Corporation. The size of wire shall be compatible with the electronic circuit in which it is used. No smaller wire than #22 shall be used without the approval of the responsible engineer. All special wires which are used in high current, video circuits shall be approved by the responsible engineer before being used.

3.5.7.2 Wire Connections. -- All wire ends shall be soldered at points of electrical connections and shall be mechanically secured before soldering, except when the small size of the wire or member to which the wire attaches makes a mechanically secured connection impractical, however such small mechanical connections shall be ample to hold the wire in place before soldering. Lugs or similar devices soldered to wire ends shall be used when electrical connections are made by clamping the conductor between parts. Such connections shall not be made by clamping wire ends between parts. Lugs or similar devices shall not be clamped between a metallic and an insulating material but shall be clamped between metallic members. Lugs of either the soldered or solderless type and similar devices may be used but shall be soldered to the wire ends and shall be mechanically secured to the wire by crimping the wire upon the terminal or the terminal upon the wire before soldering.

3.5.7.3 Insulation Hazards. -- Whenever wires are run through holes in metal partitions, shields and the like, less tha 1/8 inch in thickness, the holes shall be equipped with suitable grommets for mechanical protection of insulation otherwise subject to abrasion. Panels 1/8 inch or more in thickness either shall have grommets or shall have the hole edges rounded to a radius equal to one-half the thickness of the material or equal to the diameter of the largest wire running through the hole. Care shall be exercised in the running of hook-up wire to ensure that it is not carried over or bent around any sharp corner or edge which might in time cut through the insulation. In order to prevent deterioration of the conductor by heat, care shall be taken to ensure that wiring is not exposed to local temperatures and that it cannot come in direct contact with heated parts.

3.5.7.4 Interior Cabling. -- Conductors shall be bound into a cable whenever possible and securely held by means of wraplock, cord, or other suitable means. Cables shall be securely held in place by cable clamps.

3.5.7.5 Exterior Cabling. -- Cables used to interconnect equipment outside of enclosing cabinets shall be fabricated in accordance with SCS-4.

3.5.7.6 Coding. -- All wiring shall be distinctly coded by means of numbers on each end and color coded.

3.5.8 Brazing. -- Brazing shall be in accordance with MIL-B-7883.

3.5.9 Welding. -- All welding shall be performed in accordance with Chapter 60, Standard Qualification Procedures, of the American Welding Society Handbook (1950 Edition). The vendor shall have established his Procedure Qualification in accordance with Part I, and shall employ welding operators who have been qualified under Part II, Operator Qualification. The vendor shall be responsible for the quality of the welding performed by his organization and for the welding of his subcontractors.

3.6 General Design. -- The vendor shall design the XMC-364 subject to the requirements of this specification. This specification is detailed only to the extent considered necessary to obtain the desired mechanical, electrical, and performance characteristics and ensure the continuance of these characteristics. The design, layout, and assembly of the XMC-364, its components and their parts shall be such as to facilitate quantity production.

3.6.1 Interchangeability. -- Where suitable standard parts satisfy the requirements of the design of the XMC-364, the design shall not be based upon parts of special design. When equivalent parts are available from several manufacturers, the design shall not preclude the use of any of these parts. Limitations on the operation of parts and tolerances on dimensions included in the design shall be sufficient to accomodate a maximum use of various replacement parts that will operate in accordance with the requirements of this specification.

3.6.2 Adjustments. -- The XMC-364 shall be designed so that it requires a minimum of adjustment after it has been assembled. If adjustments are required after final assembly, they shall be convenient to effect under all service conditions, including those under which an operator is required to wear standard service gloves.

3.6.3 Mechanical Stability. -- The XMC-364 including its adjustment controls, shall be so designed that the position of a part or control does not change, except as required for the assembly to function as required in 3.7 when subjected to the conditions of 3.8.

3.6.4 Operating Temperature of Parts. -- When tested in accordance with 4.2.2, the maximum operating temperature, for each standard part and permitted nonstandard part shall not exceed the maximum temperature for which the part is designed.

3.6.5 Size, Shape and Weight. -- The maximum size of the XMC-364 shall be within a cylinder 24 inches in diameter and 24 inches in length. This is the maximum over-all outside dimension including mounting structures and cable connector protrusions. The maximum weight of the XMC-364 shall be 150 pounds. This weight shall include the weight of any pressurizing agent at 30 to 60 psi gage, if used.

3.6.6 Expected Life. -- The XMC-364 shall be capable of 46 operations in accordance with 4.2.1 without degradation of performance specified in 3.7 under the conditions of 3.8. Any of the first 45 operations may occur during or after the storage periods indicated in 3.8.3. The probability that the 46th operation shall be a malfunction shall not exceed 1 in 200 operations. The probability of malfunction occuring in any of the operations prior to the 46th operation shall also be 1 in 200 operations.

3.6.7 Safety. -- The XMC-364 shall be designed to provide maximum safety for maintenance and operating personnel. Adequate markings shall be located on equipment as warnings of mechanical, electrical, and nuclear radiation safety hazards as near the hazardous points as possible.

3.6.8 High Voltages. -- The XMC-364 or any of its components that is operative when separated from the XMC-364 shall either be designed so that operating or maintenance personnel cannot intentionally or accidentally contact voltages that are dangerous to life, or be suitably marked to warn personnel of the location of such voltages.

3.6.9 Convenience. -- The XMC-364 shall be designed to afford maximum accessibility for the replacement, adjustment and testing of its components without the necessity for disconnecting or removing interposed electrical or mechanical parts.

3.6.10 Interference. -- The XMC-364 shall comply with the requirements of MIL-I-6181 governing generation of and susceptibility to radio frequency interference voltages and fields.

3.7 Performance Requirements

3.7.1 Primary Power

a. The XMC-364 shall operate from a 400 cps ± 5 per cent power source at 115-v ± 10 per cent.

b. The XMC-364 shall operate to its intended use, in any position after a 30 second warm up period. The XMC-364 power load shall not exceed 140 watts except during short surges. Two such short surges shall be allowed in a 30 second period; the time between surges shall be a minimum of 10 seconds. A short surge shall not exceed 225 watts peak and its duration shall not exceed 3 seconds before falling off to one half of the peak of the surge. Power as a function of time requirements are shown in Figure 1. At time A the XMC-364 is turned on; at time B auxiliary equipment used with the XMC-364 is turned on. Time B shall occur at least 5 seconds before time C. The XMC-364 shall operate to its intended use after time C. Time B shall follow time A by a minimum of 10 seconds.

c. No fuses shall be used in the primary power circuit for protective purposes.

d. The XMC-364 shall not malfunction or operate prematurely to its intended use in accordance with 1.1 from signals generated in the primary power supply.

e. A regulator is required to maintain the specified voltage. The voltage regulator shall be capable of the output requirements as given in Figure 1. Regulation during short surges is not required to the accuracy indicated in (a) above. The output voltage of the regulator will nominally be 90 volts ± 1 per cent. All circuits in the XMC-364 which operate directly from the AC power supply shall be designed for 90 volts ± 1 per cent input.

f. The intended use of the XMC-364 shall be in accordance with 1.1. The performance of the XMC-364 shall be tested either by the initiation of a nuclear weapon, or by a measuring device which indicates the proper magnitude of the neutron yield at the proper time.

SECRET

UNCLASSIFIED

Watts Required by XMC-364 and Auxiliary Equipment

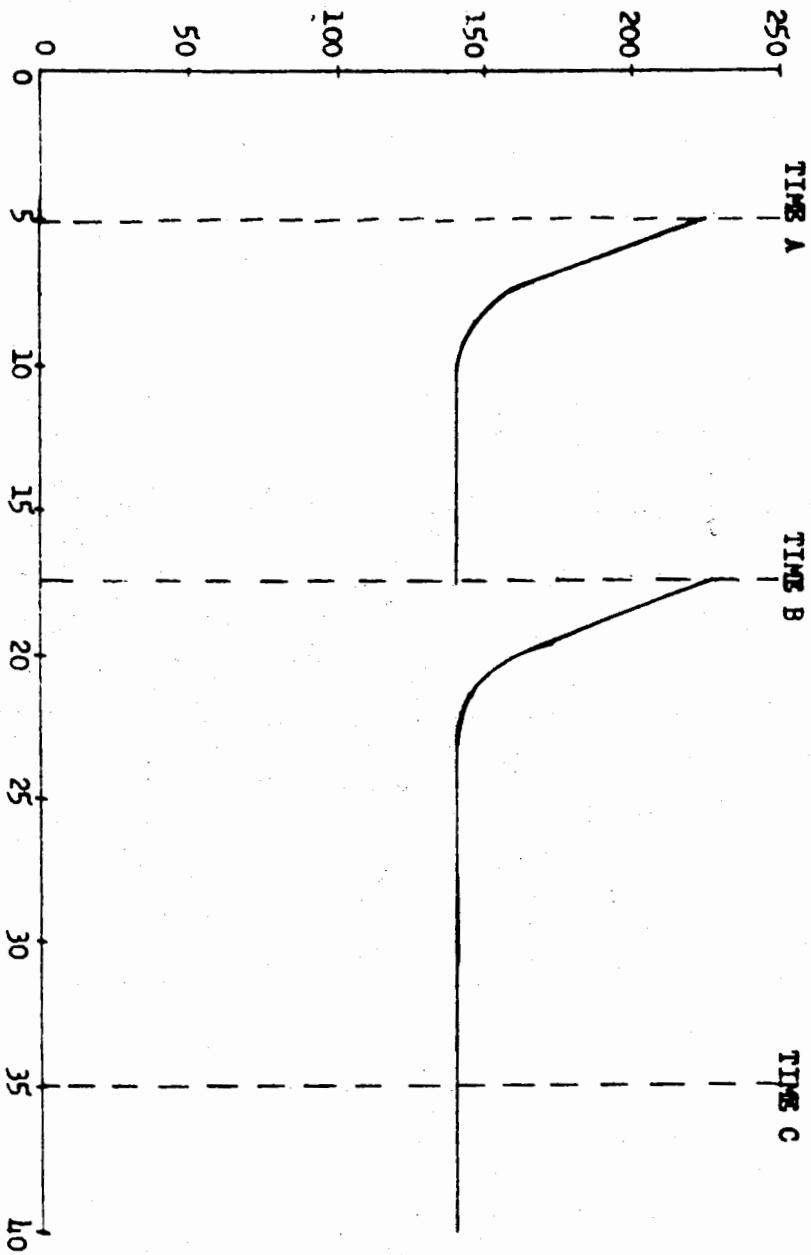

TIME IN SECONDS

FIGURE 1

UNCLASSIFIED

SECRET

SECRET UNCLASSIFIED

3.7.2 Output Intensity. -- The XMC-364 neutron yield and timing requirements are specified as follows:

DOE
b(3)

UNCLASSIFIED SECRET

3.7.3 Operation. -- The XMC-364 shall be capable of the specified output when the following signals are supplied to the XMC-364 and when the following conditions exist in the XMC-364.

3.7.3.1 Initial Signal. -- The XMC-364 including the precision timer shall be capable of the specified output 30 seconds after the primary power is available and after being supplied by a suitable pulse. The initial signal shall be an electronic device which generates signals of the form shown in DS(5330)24289. One of these signals shall be used as the initial pulse. The initial pulse shall be reshaped for use as required. The initial signal shall have the following characteristics:

a. The amplitude of the initial signal shall be a minimum of 300 volts and a maximum of 750 volts.

b. The rise time of the initial signal shall be a maximum of .05 microseconds. The rise time of the signal is the time required for the amplitude of the signal to increase from 0.1 to 0.9 of its maximum value.

c. The maximum length of the pulse shall be 30 microseconds and the minimum length shall be 0.5 microseconds. The pulse length is the time interval between the two 0.1 maximum value points of the signal.

d. The output impedance of the signal generator shall not exceed 2500 ohms. A signal of less than 10-v peak amplitude shall not initiate the operating cycle of the XMC-364.

3.7.3.2 Precision Timer. -- The initial signal shall start a precision

DOE b(3)

3.7.3.3 Source Gap Circuit. -- Upon receipt of the delayed signal from the precision timer, a 0.015 microfarad capacitor which has been charged to 17 kv ± 3 per cent shall be discharged into the source of the accelerator tube. This energy produces ions in the vicinity of the source. The discharge shall be initiated by a spark-gap

3.7.3.4 Target Pulse Delay. -- The delayed signal from the precision timer shall be delayed so that maximum yield from the XMC-364 results, and this delayed signal shall be used to fire the target spark-gap.

DOE b(3)

delay does not include the target spark-gap delay.

3.7.3.5 Target Pulse Generator. -- Upon receipt of the delayed signal in 3.7.3.4, a 0.21 ± .03 microfarad capacitance which has been charged to 17 kv ± 3 per cent shall be discharged into the primary of a step-up pulse transformer. The output of the pulse transformer shall be such that the neutron yield in 3.7.2 is obtained. The capacitor is discharged by a spark-gap.

3.7.4 XMC-364 Components. -- The XMC-364 shall consist of the following major components.

3.7.4.1 Voltage Regulator. -- The input to the voltage regulator shall be obtained for a power supply which is capable of supplying the required power as specified in 3.7.1. The voltage regulator shall supply 90-v RMS at 400 cps ± 5 per cent with a maximum variation in voltage of ± 1 per cent. The voltage regulator shall also supply peak regulated power which is proportional to the RMS power. The power supplied shall be as follows:

1. 90-v RMS - 100 watts

2. 90-v Peak - 40 watts

The time required for the voltage regulator to smooth a stop load of 50 watts shall be a maximum of 2 seconds. The voltage regulator shall be capable of the specified output up to and after 90 days storage with no adjustments made when the regulator is removed from storage.

3.7.4.2 High Voltage Power Supply. -- The input to the high voltage power supply shall be obtained from the voltage regulator. The input shall be:

90-v peak proportional to RMS and 90-v RMS AC ± 1 per cent, 400 cycle ± 5 per cent.

The output voltage shall be used to charge the source capacitor and the target capacitor. The target capacitor, which is .21 microfarad ± 0.05 microfarad, shall be charged to a minimum of 16,500-v and a maximum of 17,500-v. The voltage shall not vary more than ± 1 per cent when set between these limits. The target capacitor shall charge to within 98 per cent of the set voltage in a maximum of 10 seconds. The maximum charging current shall be 6 ma. The source capacitor which is a .015 microfarad ± .005 microfarad shall charge to a minimum of 16,500-v and a maximum of 17,500-v. The voltage shall not vary ± 1.0 per cent when set between these limits. The source capacitor shall charge to within 98 per cent of the set voltage in a maximum of 10 seconds. 5 kv RMS ± 10 per cent at 500 microamperes shall be supplied to the accelerator tube's modified Phillips Ion Gage.

3.7.4.3 Low Voltage Power Supply

3.7.4.3.1 Input. -- 90-v ± 1 per cent RMS AC, 400 cycle ± 5 per cent.

3.7.4.3.2 Output. -- The output shall include all regulated DC voltages to the precision timer, the voltage regulator, and the trigger circuits in the source gap. The voltage shall be as follows:

+ 500 volts unregulated	10 milliamperes
+ 300 volts regulated	75 milliamperes -1 per cent regulated
- 105 volts regulated	10 milliamperes - VR tube regulated

The filament power for all tubes in the XMC-364 will be obtained from a 6.3-v, 10 ampere source.

3.7.4.4 Source-Gap Circuits. -- The source-gap circuit shall include:

a. Source capacitor of 0.015 ± .005 microfarads

b. Source spark-gap

c. Source spark-gap trigger, trigger transformer

The source-gap circuit shall be in accordance with drawing DS(5330)24288.

3.7.4.5 Target Pulse Delay. -- The function of the target pulse delay is given in 3.7.3.4. The target pulse delay circuit shall be in accordance with drawing DS(5330)24288.

3.7.4.6 Target Gap Circuit. -- The target gap circuit shall consist of:

a. A 0.21 ± .05 microfarad capacitor which is charged to 17 kv ± 3 per cent negative with respect to ground.

b. A target spark-gap which when triggered discharges to 0.21 microfarad capacitor in (a).

c. A spark-gap trigger transformer which when supplied with a pulse triggers the spark-gap in (b).

DOE b(3)

3.7.4.7 Precision Timer. -- The precision timer specifications shall be in accordance with SC-5107-Sp.

3.7.5 Pressurized Tank. -- Should the XMC-364 be pressurized, a maximum of 75 psig is allowed. A dry insulating gas shall be used for pressurizing. There shall be no loss of pressurizing gas under all environmental conditions for a minimum period of 90 days such that will produce an electrical failure, malfunction or degradation of performance.

3.8 Environmental Conditions. -- The XMC-364 shall be designed to function as specified in 3.7 without malfunctioning under the conditions in 3.8.1 and after being subjected to the conditions of 3.8.2.

3.8.1 Operating Environment

3.8.1.1 Temperature. -- Temperatures ranging from -90° to +165°F. *

3.8.1.2 Humidity. -- Moisture conditions including:

a. Relative humidities ranging from 30 to 100 per cent and/or condensation at any temperature from -90° to +165°F. *

b. Relative humidities decreasing linearly from 30 per cent at +85°F to 2 per cent at +165°F.

3.8.1.3 Altitude. -- Barometric pressures ranging from 30 to 3.44 inches mercury absolute, (50,000 ft.), for 20 hours at any temperature between -90° to +165°F. The unit shall operate in its pressurized container.

3.8.1.4 Vibration. -- For as long as a total of 20 hours at any temperature between -90° and +165°F in any direction as follows. (Maximum amplitudes or accelerations occur for only a small percentage of the 20 hours. During the remainder of the 20 hours, the amplitude or acceleration may vary between zero and the maximum given below.)

Condition	Frequency range(cps)	Constant acceleration or double amplitude (g or inches)
1	3-10	0.098
2	10-30	0.109
3	30-60	0.054
4	60-500	10 g

3.8.2 Nonoperating Environment

3.8.2.1 Rain. -- Rainfall of approximately four inches per hour for a two hour period.

3.8.2.2 Marine Atmosphere. -- Exposure and storage conditions generally encountered on a wharf or dock adjacent to a large body of salt water for six consecutive days.

3.8.2.3 Dust and Sand. -- Conditions encountered in desert atmospheres containing sand and dust particles.

3.8.2.4 Fungus. -- Tropical atmospheres containing fungus spores.

3.8.2.5 Altitude. -- Barometric pressures ranging from 30 to 3.44 inches mercury absolute (50,000 ft.).

3.8.2.6 Transportation Vibration. -- Vibration from 10 to 200 cps at amplitudes to produce an acceleration of approximately 5 g in any direction with the assembly installed in its shipping container.

3.8.2.7 Handling Shock. -- Handling shocks which may occur with the assembly installed in its shipping container up to 30 g.

3.8.3 Storage Conditions. -- The XMC-364 may be subjected to the following storage conditions. These conditions are included as information to be considered in the design.

a. Storage for five yeats at temperatures ranging from ± 20° to +90°F and at relative humidities of less than 40 per cent.

b. Storage for six months at temperatures ranging from -90° to +165°F. Moisture conditions may consist of relative humidities ranging from 30 to 100 per cent and/or condensation between -90° and +85°F to approximately 2 per cent at 165°F.

c. Storage for fifteen consecutive days at temperatures ranging from 85°F +112°F with humidities ranging from 30 to 90 per cent.

4 SAMPLING, INSPECTION AND TEST PROCEDURES

4.1 Authorized Inspector, Test Facilities and Records. -- Inspection of the XMC-364 in accordance with the requirements of this specification may be performed at the vendor's establishment by an inspector designated by the Sandia Corporation. The vendor shall place inspection facilities at the disposal of the inspector and shall assist him as required. Tests required of the vendor shall be performed using test equipment having accuracies commensurate with the requirements of this specification. Tests required to be performed by the vendor may be performed by an agency chosen by the vendor and approved by the Sandia Corporation. Accurate records of all tests shall be kept by the vendor and shall be available to the Sandia Corporation at all times. Signed copies of these test records shall be supplied the Sandia Corporation upon request or at the completion or termination of the contract.

4.2 Tests. -- Test chambers shall have a volume of at least twice that of the equipment being tested therein and shall be arranged so that no radiant heat or circulating air impinges directly on the equipment. Unless otherwise specified, tests shall be performed at ambient laboratory atmospheric conditions.

Unless otherwise specified, maximum allowable tolerances on test condition measurements shall be as follows:

Barometric Pressure: ±5 per cent of the pressure specified in inches of mercury.

Temperature: ±5°F.

Relative Humidity: ±5 percentage points.

Vibration Tolerance:

Amplitude: ±5 per cent.

Frequency: ±2 per cent.

4.2.1 Functional Test. -- A signal generator which simulates the initial signal 3.7.3.1 shall be connected to the XMC-364 for this test. Apply the 400 cycle ±5 per cent, 115-v ± 3 per cent power. After 30 seconds a pulse from the initial signal generator shall be applied to the input of the XMC-364. The resulting output shall be equal to or better than that described under 3.7.2 when measured with the neutron counting system. DOE b(3)

The pulse shape shall be measured in accordance with 3.7.2 (a).

4.2.2 High Temperature Test. -- The XMC-364 shall be placed in a suitable chamber. The chamber shall be raised to 165°F at a relative humidity of not more than 5 per cent and the XMC-364 stabilized at this temperature. While the XMC-364 is at this temperature it shall meet the requirements of 4.2.1.

4.2.3 Low Temperature Test. -- The XMC-364 shall be placed in a suitable chamber having a relative humidity of 50 per cent at a temperature of 73°F. The temperature shall be reduced to -90°F and the mechanism stabilized at this temperature. While the XMC-364 is at this temperature it shall meet the requirements of 4.2.1.

SECRET

UNCLASSIFIED

4.2.4 Humidity Test

4.2.4.1 Preconditioning. -- The XMC-364 shall be placed in a chamber which has been preheated to 130°F and has a relative humidity of 15 per cent. The XMC-364 shall remain in the chamber for a period of 24 hours. Immediately upon withdrawal the XMC-364 shall be placed in a suitable humidity chamber and subjected to five humidity cycles in accordance with 4.2.4.2.

4.2.4.2 Humidity Cycle. -- While the XMC-364 is in the chamber, the humidity shall be maintained at 90 to 98 per cent relative humidity throughout the following cycle:

a. The temperature shall be raised to 149°F within 4 hours and maintained at this point for 8 hours.

b. The temperature shall then be reduced to 86°F within 4 hours and maintained at this point for 21 hours. Between the 8th and 12th hours after stabilization at 86°F, the XMC-364 shall meet the requirements of 4.3.1.

c. The temperature shall be reduced to 68°F within one hour and maintained at this point for 4 hours.

d. The temperature shall then be raised to 86°F within one hour and maintained at this point for 5 hours.

4.2.4.3 Inspection Following Test. -- Upon completion of the humidity test, the XMC-364 shall meet the requirements of 4.2.1. Parts thereof shall be inspected for deterioration of materials, such as corrosion and water absorption, or potential deterioration because of accumulation of moisture.

4.2.5 Salt Spray. -- The XMC-364 shall be tested in a salt spray chamber in accordance with MIL-E-5272, Section 4.6 for 50 hours. Upon completion of the test the assembly shall meet the requirements of 4.2.1 and shall be visually inspected for deterioration of materials, e.g., corrosion.

4.2.6 Dust and Sand. -- The XMC-364 shall be tested in a dust chamber in accordance with MIL-E-5272, Section 4.11, Procedure I. Upon completion of the test the XMC-364 shall meet the requirements of 4.2.1.

4.2.7 Vibration

4.2.7.1 Resonant Frequencies. -- Prior to the vibration tests specified herein, the mechanical resonant frequencies of the assembly and/or its components shall be determined by cycling through the frequency ranges of 10 to 60 to 10 cps and 60 to 500 to 60 cps at low amplitude. If any serious resonant conditions (as evidenced by extreme amplitudes) are detected, the assembly and/or its components shall be redesigned to eliminate or minimize resonance. Prior to redesign the Sandia Corporation shall be consulted. Upon the written approval of the Sandia Corporation, vibration isolators (e.g., shock mounts) may be used.

UNCLASSIFIED

SECRET

4.2.7.2 Equipment Operating/Nonoperating Tests. -- The complete assembly (with its approved vibration isolators if any) shall be secured to a vibration table in the manner it will be mounted in service, and shall be vibrated in each of three mutually perpendicular planes under the following test conditions:

Condition	Frequency range(cps)	Constant Acceleration or double amplitude (g or inches)	Duration of cycle (minutes)	Duration of test (minutes)
1	3-10-3	.098	5	25
2	10-30-10	.109	5	25
3	30-60-30	.054	15	25
4	60-500-60	10 g	15	45

The assembly shall meet the requirements of 4.2.1 during the last few minutes of vibration under each condition in each of three planes.

4.2.8 Acceleration and Shock

4.2.8.1 Acceleration. -- The assembly shall be mounted on a spin table and subjected to a constant acceleration of 50 g for at least one second applied in both the fore and aft directions. The fore and aft line is defined by the mounting arrangement of the assembly with respect to and is parallel to the line of forward motion of the carrying vehicle. The assembly shall meet the requirements of 4.2.1 during the acceleration period.

4.2.8.2 Shock. -- The assembly shall be dropped 5 times from a height such as to produce an acceleration of 30 g in 11 ± 1 milliseconds in accordance with Figure 5 of USAF 7201. The assembly shall meet the requirements of 4.2.1 after this test.

4.2.9 Water Absorption Test. -- Materials which may absorb water shall be tested to determine the necessity of treatment in accordance with 3.3.4.1. Test strips of the material 1/8 inch thick 1 inch wide and 3 inches long shall be dried in an oven at 90°F for 24 hours. They shall then be immersed in water for a period of 24 hours. The strips shall be removed from the water, wiped dry, and immediately weighed. This weight shall be compared with the weight of the predried sample before immersion to obtain the water absorption characteristic (in per cent).

4.2.10 Rain Test. -- The assembly shall be tested in accordance with MIL-E-5272, Section 4.10.1. Upon completion of the test, the assembly shall meet the requirements of 4.2.1.

5 PREPARATION FOR DELIVERY

5.1 Packaging. -- The XMC-364 shall be packaged to prevent damage in shipment by common carrier and ensure delivery in such a condition as to conform with all the requirements of this specification.

5.2 Marking. -- Each package shall be marked 'FRAGILE-HANDLE WITH CARE'.

6 NOTES

None

Notice: When government drawings, specifications, or other data are used for any purpose other than in connection with a definitely related government procurement operation, the United States Government thereby incurs no responsibility nor any obligation whatsoever; and the fact that the Government may have formulated, furnished, or in any way supplied the said drawings, specifications, or other data is not to be regarded by implication or otherwise as in any manner licensing the holder or any other person or corporation or conveying any rights or permission to manufacture, use, or sell any patented invention that may in any way be related thereto.

DISTRIBUTION

1/35	W.A. MacNair - 5000
2/35	L.G. Abraham - 5400
3/35	B.J. Carr - 5414-1
4-5/35	T.S. Church - 5410A
6/35	H.H. Patterson - 5410B
7/35	T.F. Marker - 5420
8/35	A.J. Roth - 5424
9/35	E.L. Deeter - 5430
10/35	S.C. Hight - 5100
11/35	F.J. Given - 5300
12/35	W.O. McCord, Jr. - 5310
13/35	E.J. Burda - 5320
14/35	G.T. Ford - 5330
15-19/35	D.H. Sampson - 2310
20/35	N.E. Bradbury - DIR, LASL
21/35	R.E. Schreiber - W-DO
22/35	J.H. McQueen - GMX-7
23/35	J.R. Wieneke - W-5
24/35	H.J. Karr - W-5
25/35	T.B. Morse - 1610
26/35	E.A. Turner - 1623
27-35/35	Sandia Corporation Document Room

This is an exact Copy:
Date: 8/6/97 Org.: 4916
Initials: Hm
Forwarded to: _____
MS- _____

SC 1004-A (3-62)

UNCLASSIFIED

UNIQUE DOCUMENT SAC20011982000

Technical Memorandum

Ref. Sym: 7223(301)

THIS MEMORANDUM IS NOT TO BE REPRODUCED WITHOUT THE EXPRESS WRITTEN PERMISSION OF SANDIA CORPORATION.

INVENTORIED

MAR 1 1966

3427-3

58-56-14

INVENTORIED

MAR 8 1965

3427-1

XR SYSTEMS FOR OPERATION REDWING

B. J. Carr, 1414

INVENTORIED

AUG 1 1963

3427-1

Inventoried September 1960

ABSTRACT

This report describes the external initiator equipment which has been prepared for use in Operation REDWING. Three systems are planned

DOE b(3)

The systems are somewhat flexible and limited changes can be made in the field as required by the responsible laboratories.

THIS DOCUMENT CONSISTS OF 59 PAGE(S)
NO. 17 OF 30 COPIES, SERIES A

RESTRICTED DATA

This document contains restricted data as defined in the Atomic Energy Act of 1954. Its transmittal or the disclosure of its contents in any manner to an unauthorized person is prohibited.

CENTRAL M & R CONTROL NO.

56566

RECEIVED 59 pages

Tech No. 415.00

UNCLASSIFIED

March 28, 1956

SECRET
UNCLASSIFIED

DISTRIBUTION:

1,2/30A	J. Kilpatrick, UCRL
3/30A	F. Fairbrother, UCRL
4/30A	J. Lovington, UCRL
5/30A	A. Hausmann, UCRL
6/30A	L. Wouters, UCRL
7/30A	V. Denton, UCRL
8/30A	E. Daly, (UCRL), PPG
9/30A	A. Hyne, (UCRL), PPG
10/30A	Livermore Division Files, PPG
11/30A	W. E. Ogle, JDO, LASL
12/30A	J. H. McQueen, GMX-7, LASL
13/30A	E. W. Salmi, W-4, LASL
14/30A	D. MacDougall, GMXDO, LASL
15/30A	D. R. Smith, W-1, LASL
16/30A	G. L. Felt, J-15, LASL
17/30A	T. S. Church, 1410
18/30A	H. E. Lenander, 5220
19/30A	D. B. Shuster, 5230
20/30A	R. T. DePew, 1411
21,22/30A	B. J. Carr, 1414
23/30A	H. J. Bowen, 5212
24/30A	E. J. Jenkins, (5212), PPG
25/30A	C. B. McCampbell, 5223
26/30A	D. Henry, 5223
27/30A	R. K. Smeltzer, 7222-2
28-30/30A	H. M. Willis, 7223

UNCLASSIFIED
SECRET

XR SYSTEMS FOR OPERATION REDWING

INTRODUCTION

At the request of Los Alamos Scientific Laboratory and University of California Radiation Laboratory, Livermore Site, Sandia Corporation has prepared external initiator equipment for use in Operation REDWING. The external initiator equipment (XR) in general consists of a pulsed neutron source (S-Unit) similar to those used in Operation TEAPOT, designed and constructed by the General Electric X-Ray Department, a time delay circuit designed at Sandia Corporation and a power supply (MC 251 inverter). The purpose of this report is to describe the XR apparatus, systems and applications for Operation REDWING.

Requirements

The following is a summary of the shots for which XR is planned:

Shot Name	Ready Date	Responsible Laboratory	Device Being Initiated
LaCrosse	May 1	LASL	
Inca	June 8	UCRL	
Yuma	June 1	UCRL	
Kickapoo	June 18	UCRL	
Erie	May 23	LASL	
Seminole	May 28	LASL	
Flathead	June 2	LASL	
Blackfoot	June 7	LASL	
*Mohawk	July 1	UCRL	
Huron	June 12	LASL	
Apache	July 1	UCRL	
Dakota		LASL	
Pawnee		LASL	

DOE b(3)

For purposes of XR requirements the shots are broken into three groups. These groups are listed below with associated neutron requirements:

Type Group	Shot Name	Neutron Output per S-Unit	No. of S-Units Required
I			2
I			2
I			2
II			2
II			2
II			2
II			2
III			4
III			4
III			4
III			4
III			4
III			4

Four S-Units may be required

DOE b(3)

Probability that the required number of neutrons will be furnished should be at least 95% and confidence level of this probability should be at least 95%.

DOE 6(3)

The exact desired time should be known three days prior to the ready date. This information should be directed to either B. J. Carr or N. J. Elliott, one of whom will be located on Paree Island, Building 415 after April 15, 1956.

Separation of the S-Unit from the HE systems has been left to the responsible laboratory in each case.

XR SYSTEM COMPONENTS

Each of the three XR systems to be used consists of several building blocks. These are (1) the neutron source (S-Unit), (2) the unit "B" junction box, and (3) the XR timer control box with time delay Unit "A". These parts are described in the next three sections.

The S-Unit

The pulsed neutron source unit S to be used in Operation REDWING is the S-5D unit which was developed by the General Electric X-Ray Department for Sandia Corporation. This unit has been described previously in the preliminary TEAPOT reports. It consists of a small pulsed linear accelerator which produces 14 MEV neutrons from an TD reaction.

DOE 6(3)

The entire unit is welded shut and is pressurized with SF_6. An outline drawing is shown in Figure 1. The size of

UNCLAS
OFFICIAL USE

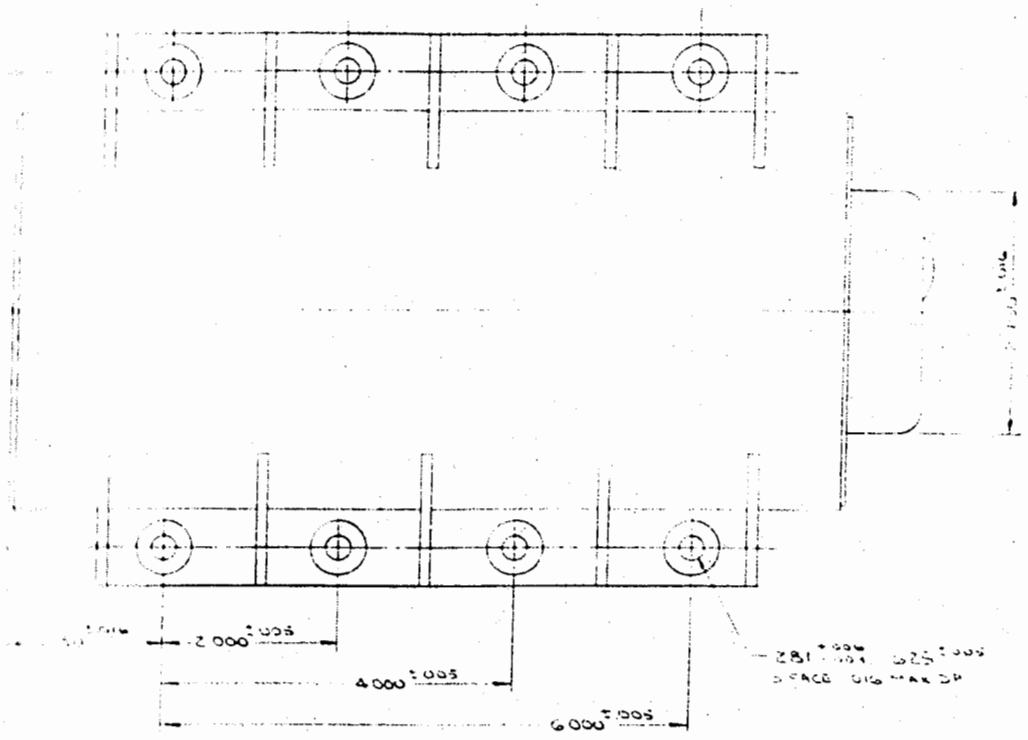

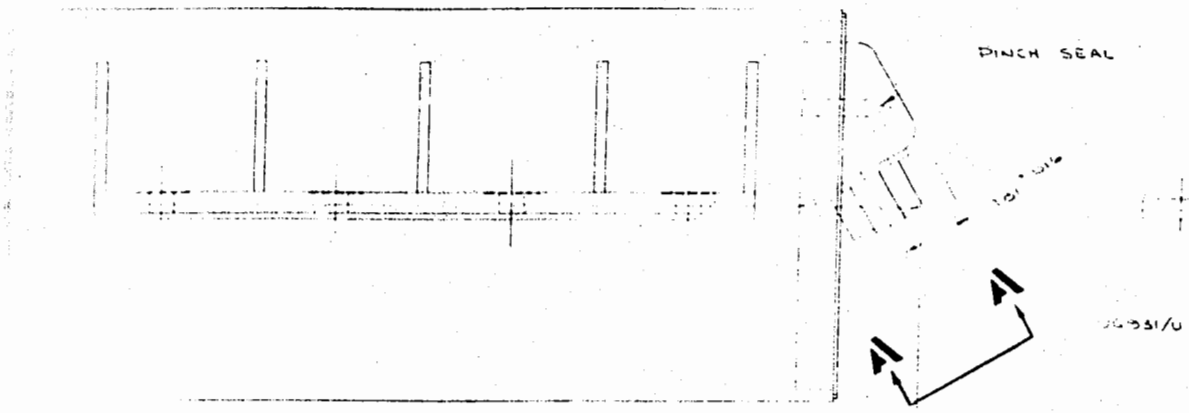

FIGUR

LASSIFIED
AL USE ONLY

NOTES

PART NO. TABLE	SYM	ZONE	DESCRIPTION	DATE	APPROVED	
	1			1-6-66		

REF. SYM: 7223 (301)

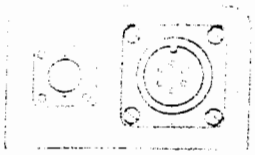

AA

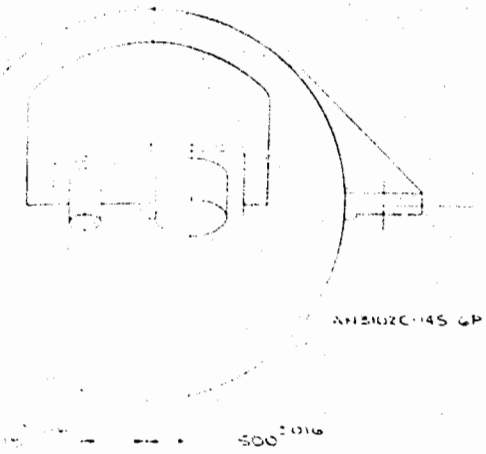

FIGURE 1

PART NO.	MFR'S NO.	DESCRIPTION	MATERIAL	MATERIAL SPEC	NOTE	ZONE	ITEM

LIST OF MATERIAL

PART CLASSIFICATION

DWG. CLASSIFICATION

OFFICIAL USE ONLY

UNCLASSIFIED

REQUIRED PER NOTED ASSY. (V DENOTES AS REQD)

MATERIAL APPD

ADDITIVE FINISH APPD

APPLICATION

UNLESS OTHERWISE SPECIFIED
DIMENSIONS ARE IN INCHES
LIMITS APPLY OVER FINISH
SURFACE ROUGHNESS EXPRESSED AS RMS MICROINCHES
FOR TOLERANCES ON HOLES, RAW STOCK AND OTHER MFG. INFO. SEE SC-7012 (SP)
TOLERANCES ON:
FRACTIONS | DECIMALS | ANGLES

DRAWN
CHECKED
APPD
APPD
APPD
APPD
APPD
CONTRACTOR APPROVAL
DRAWN | CHECKED | ENGR

TITLE
OUTLINE DRAWING FOR XMC 624 (MOD S-5)

MFR'S DWG. NO.

SCALE | RAW STK WT LBS | UNIT WT LBS

SHOWN
OPPOSITE
SUPERSEDES
5Y | DWG SIZE D
DWG. NO. DS(1424)55088
SHEET OF

DS(1424)55088

the unit is approximately 4½" OD x 9" long. Figure 2 is a circuit diagram of the unit with abbreviated operating instructions included.

DOE 6(3)

[redacted] the quantity of neutrons produced varies from unit to unit and from shot to shot. Figures 3 and 4 show typical shot to shot records of two S-Units.

Units selected for use in Operation REDWING have been tested at least 100 times prior to their being shipped to the Pacific Proving Grounds. A record of these tests are recorded for each unit similar to those shown in Figures 3 and 4.

DOE 6(3)

The method of determining operation limits can be described by reference to Figure 5. This graph was taken from an article "Non-Parametric Tolerance Limits" by R. B. Murphy and may be used for analysis of a group of data which is continuously distributed (for all practical purposes this describes S-Unit test data).

This graph is plotted for $\alpha = .95$ or a confidence level of 95%. [redacted]

DOE 6(3)

[redacted] In Figure 5 the population, n is plotted on the absissa and 124 is circled. One traces the curve fan M=3 from b to B where it crosses the population number.

DOE 6(3)

[redacted] In Figure 5, the population is 100 and M is 1. Follow the curve for M=1 from c to C where it crosses n = 100.

DOE 6(3)

Operating Instructions: XR Timer - Control Box

The XR timer Control Box is a junction box for all XR equipment and contains (1) a 115V, 400 cps. power supply which operates from 28 VDC, (2) and interlock circuit which determines that the 115V supply is operating properly, (3) connections for the unit "B" plug - in time delays and (4) cable junctions to distribute power to the rest of the XR system.

A Block diagram of the control box is shown in Figure 6. This diagram shows the MC-251 inverter whose output can be set by a Variac. Current through the interlock relay is set so that if the inverter voltage is within operational tolerances the firing line is closed. The firing line is opened if the voltage is above or below the desired level. The input current to the control box is approximately 5 amperes and the system will operate properly if the DC voltage is from 24 to 32 volts at the inverter terminals. A photograph of an XR timer - control box with timers installed is shown in Figure 7. A Unit "B" is shown on top of the control box. A photograph of the control box with the cover removed is shown in Figure 8. In this view, the two plug-in timers can be seen, the MC-251 inverter, the variac, and the socket for the interlock relay.

DOE
b(3)

FIGURE 3

DOE b(3)

FIGURE 4

DOE
b(3)

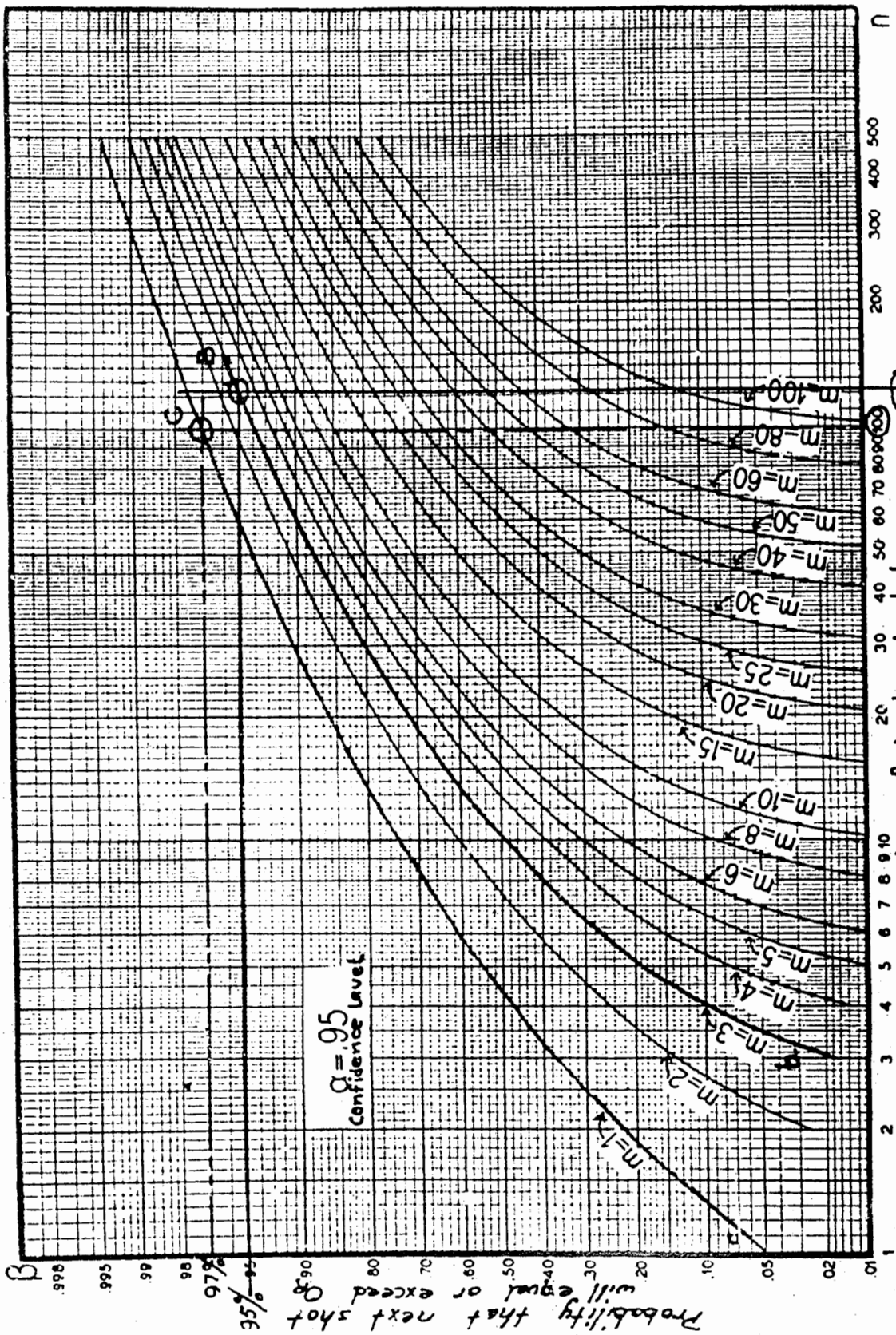

Graphs of Population Coverage for the Tolerance Level .95.

FIGURE 5

UNCLASSIFIED

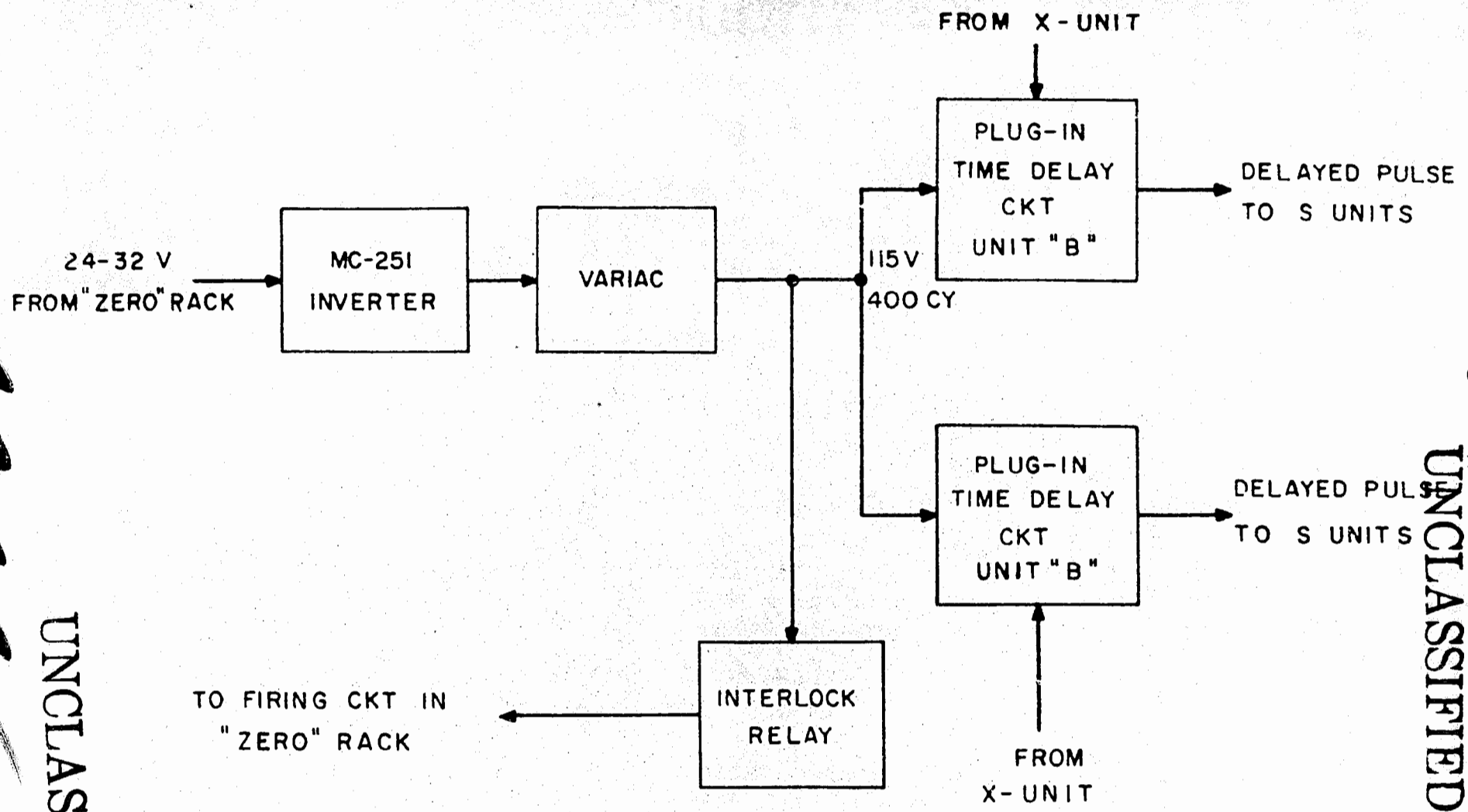

FIG. 6

BLOCK DIAGRAM OF XR-TIMER CONTROL BOX.

UNCLASSIFIED

CONFIDENTIAL

REF. SYM: 7223 (301)

Ref. Sym: 7223 (301)

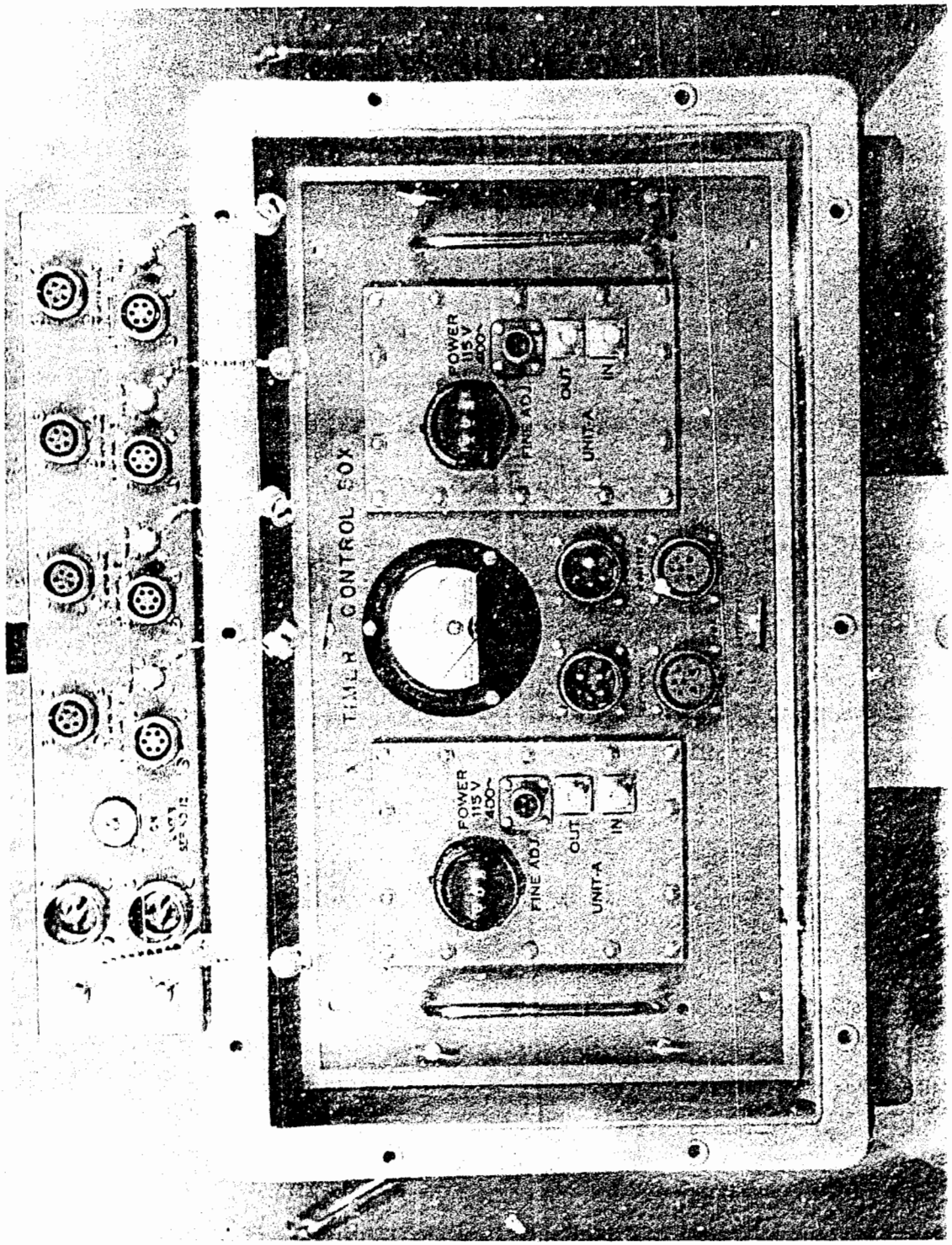

FIGURE 7

Ref. Sym: 7223 (301)

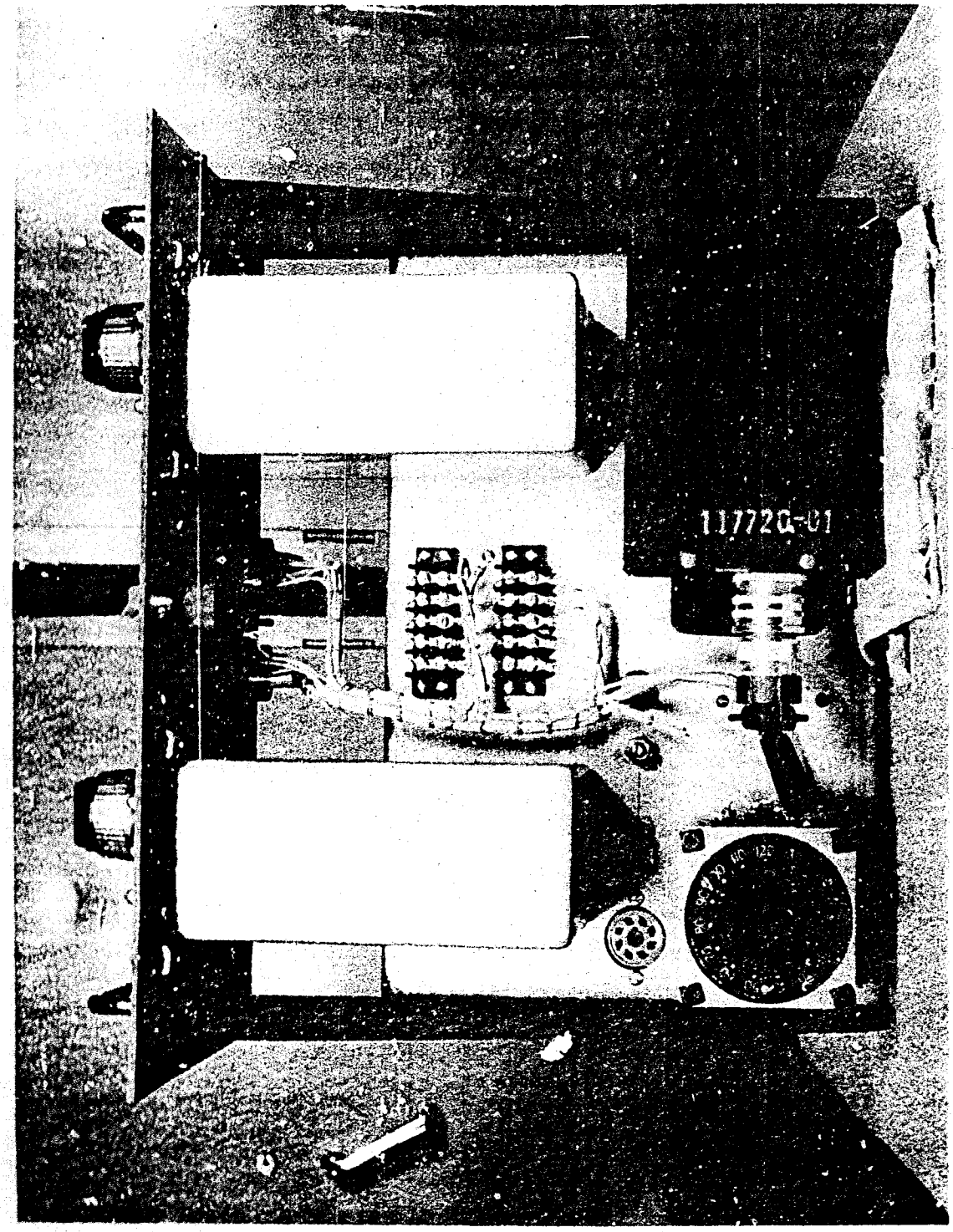

FIGURE 8

Operating Instructions - Unit "A"

Unit "A" is a precision time delay using the latest L-C timer circuit.

This unit requires 115V, 400 cycle power and a 30 second warm-up time. Several minutes warm-up will help make the first shot time delay more nearly equal to succeeding delays.

DOE 6(3)

FIGURE 9

DOE
b(3)

UNIT "A" TIMER
TABLE I

DOE b(3)

This unit uses components with reasonably low temperature coefficients and no attempt has been made to temperature compensate the overall timer. It is suggested that warm-up times be limited to only five minutes as the unit will warm up about 20 degrees during the first hour and 10 degrees more during the next two hours. In any case one can expect repeatable time delays if the unit is operated under similar conditions of ambient temperature and warm-up time.

DOE b(3)

photograph of a complete time delay unit (Unit "A") is shown in Figure 10.

Operating Instructions - Unit "B"

Unit B is a combination junction box and pulse generating unit. It is intended to furnish AC power and triggering pulses to four S-Units. A circuit diagram of Unit "B" is shown in Figure 11.

400 cycle 115 volt power is delivered from the XR timer control box and timer output pulses are brought into the unit from the control unit.

These pulses are fed directly out again at trigger output plugs numbers 1 and 2. However, these two pulses are also used to produce delayed output pulses at trigger output, plugs numbers 3 and 4 respectively. Since the pulses are negative. pulse transformers are used to invert them.

DOE b(3)

It will be noted that the tubes have separate power supplies so that an output pulse is still produced if either system fails. In the event one tube fails the other tube should still give an output pulse.

It is intended that the timers (Unit "A") will be set so that four pulses will result and so that the pulses will interlace, i.e., 1 and 3 with 2 and 4. S-units may be paired up to take care of small differences in delay they may introduce. The short 0.4 to 1.0 usec delays are made from HH 4000 cable. A length of 4.25 inches provides 0.4 usec delay when used with the pulse transformer and 5727/2D21W output thyratrons.

When making up delay cables, care should be taken to avoid introducing inductance by having an unshielded coil. That is, the delay wire should be brought straight out from under the shield wires and not come out as a coil.

Ref. Sym: 7223 (301)

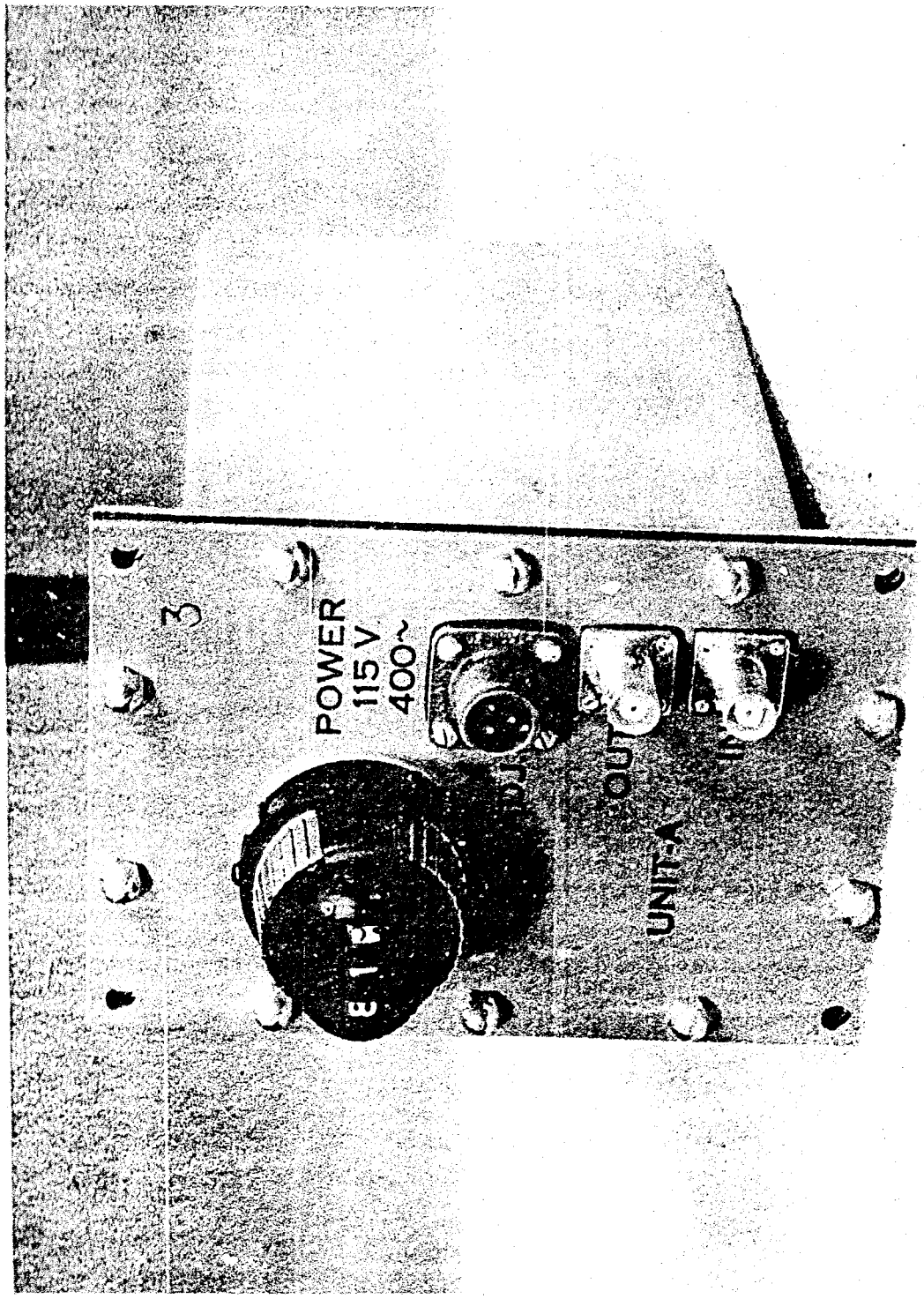

FIGURE 10

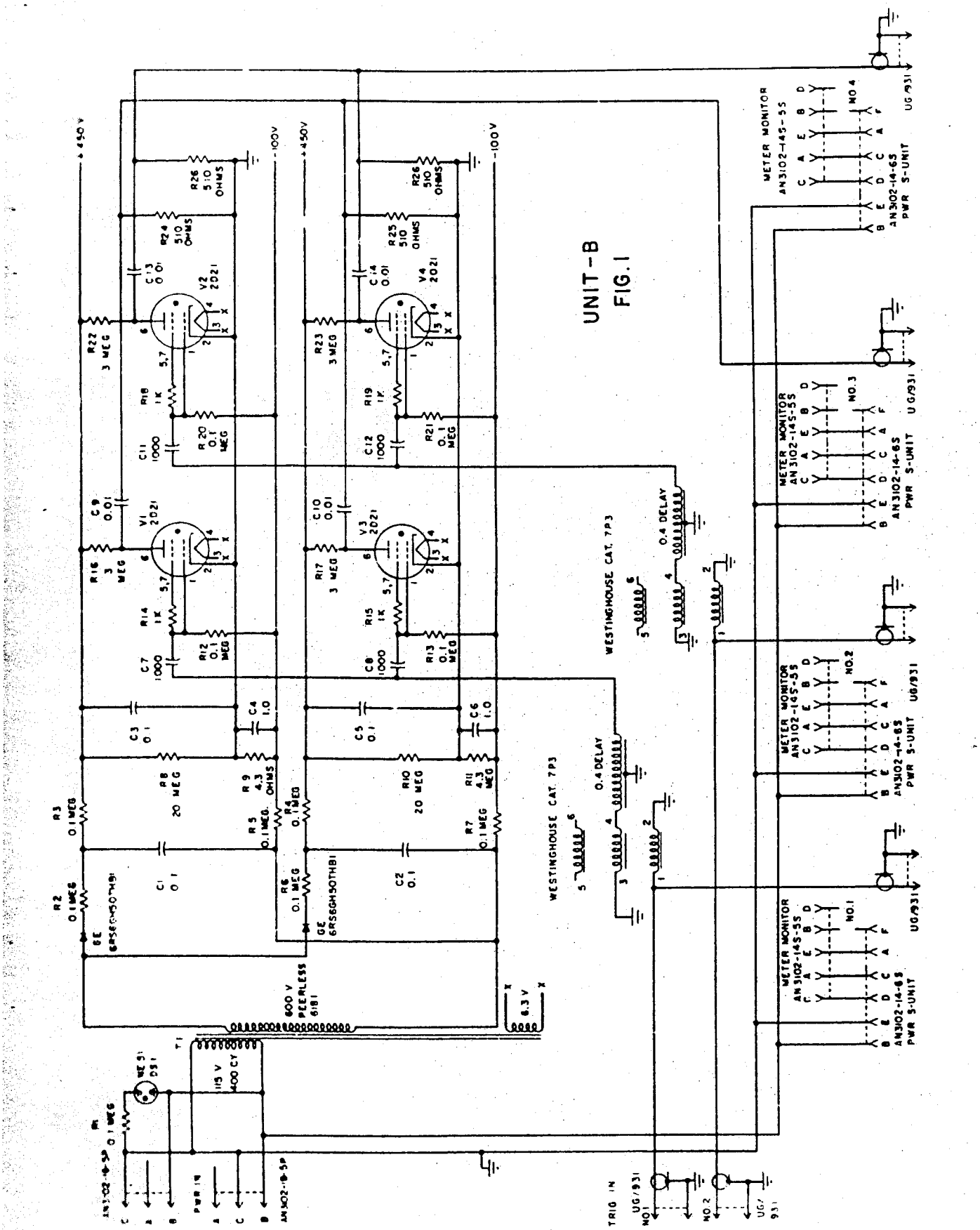
UNIT-B
FIG. I
+450 V
-100 V
R26 510 OHMS
R24 510 OHMS
R25 510 OHMS
C13 0.01
C14 0.01
V2 2D21
V4 2D21
R22 3 MEG
R23 3 MEG
R18 1K
R19 1K
R20 0.1 MEG
R21 0.1 MEG
C11 1000
C12 1000
C9 0.01
C10 0.01
V1 2D21
V3 2D21
R16 3 MEG
R17 3 MEG
R14 1K
R15 1K
R12 0.1 MEG
R13 0.1 MEG
C7 1000
C8 1000
C3 0.1
C4 1.0
C5 0.1
C6 1.0
R8 20 MEG
R9 4.3 OHMS
R10 20 MEG
R11 4.3 MEG
R3 0.1 MEG
R5 0.1 MEG
R4 0.1 MEG
R7 0.1 MEG
R2 0.1 MEG
R6 0.1 MEG
C1 0.1
C2 0.1
GE 6RS6GH50THB1
600 V PEERLESS 6181
6.3 V
T1
115 V 400 CY
WESTINGHOUSE CAT. 7P3
0.4 DELAY
METER MONITOR AN3102-14S-5S
AN3102-14-6S PWR S-UNIT
UG/931
NO.1
NO.2
NO.3
NO.4
TRIG IN
PWR IN
AN3102-14-5P

FIGURE 11

DC voltages +450 and -100V on both power supplies should be checked to see if they are operating properly. These will read 450V and -100V on a Simpson meter, on the 1000V scale.

A photograph of the bottom and front of the Unit "B" is shown in Figure 12.

XR SYSTEMS

DOE b(3)

This is a dual channel XR system in which the non-peralleled component is interlocked.

DOE b(3)

In addition, delay cable has been sent to the Pacific so that other periods may be covered. Time delay A is set at a time different from time delay B so that the four S-units can be triggered as described in the previous section on Unit "B".

DOE b(3)

TESTING OF XR EQUIPMENT

Two methods of testing of XR systems are planned for Operation REDWING. They are: (1) trailer tests where laboratory test equipment will be used and (2) cab tests where R.F. telemetering testing will be used. In trailer tests each piece of XR equipment will be checked. Pages 24 through 26 show check sheets for testing Unit "A." DOE b(3)

Pages 27 through 31 show check sheets for testing Unit S. In these tests two testers are used: (1) a scintillation device which indicates the neutron yield. Accuracy is not expected to be better than ± 35% of the measured yield and (2) a silver geometry which has been calibrated against the Cockroft-Walton generator at Los Alamos Scientific Laboratory and should be within ± 25% of the measured neutron yield. In addition the delay from the input pulse until the neutron pulse is generated is measured.

For shots using two S-Units such as LaCrosse and Apache, and University of California Radiation Laboratory shots such as Inca, Yuma, Kickapoo and Mohawk, XR system check sheets are shown on pages 32 through 39.

DOE b(3)

In addition to the tests shown on these check sheets a test will be made from the XR trailer to the R.F. telemetering site to check the telemetering system with other laboratory equipment.

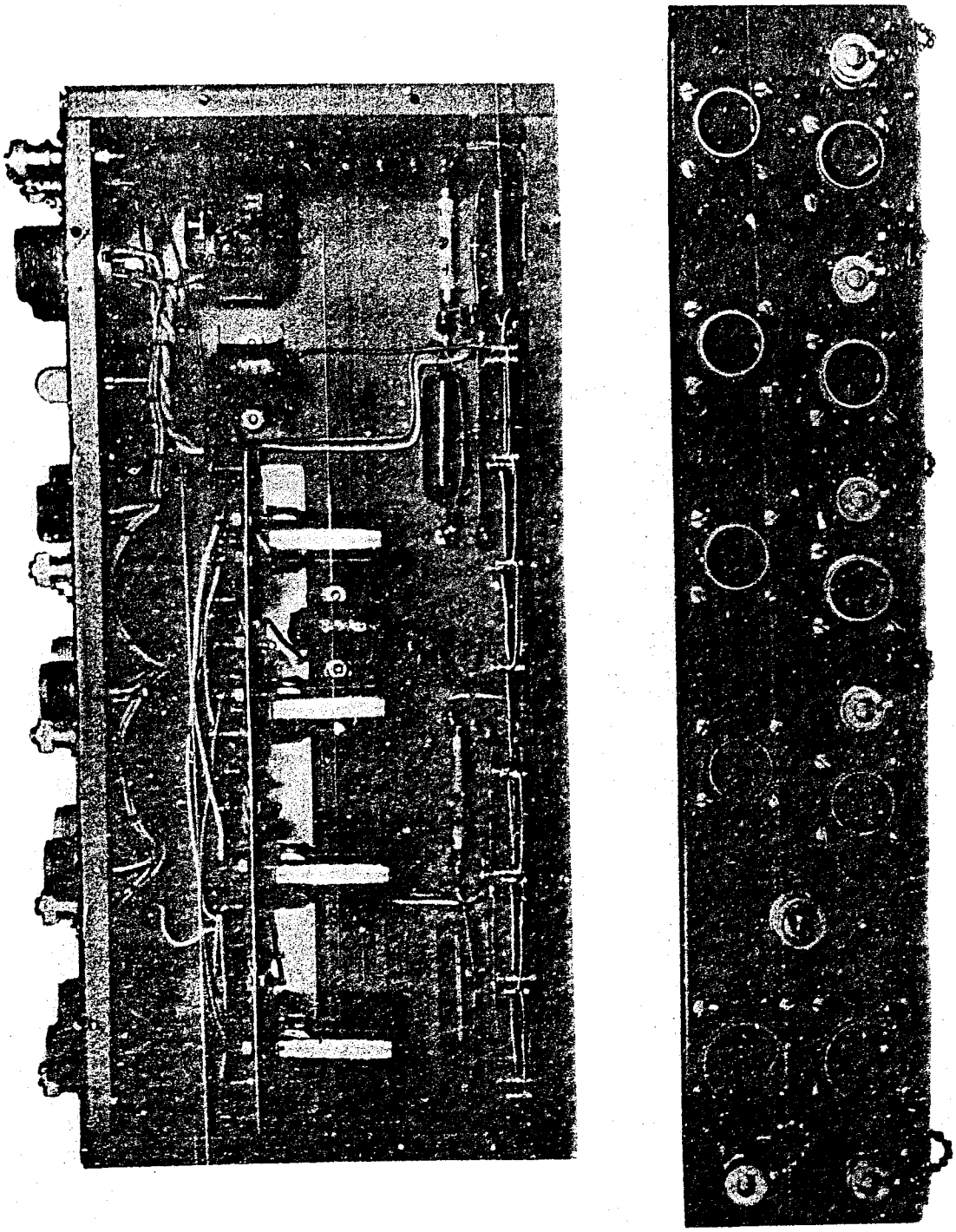

FIGURE 12

REF SYM: 7223 (301)

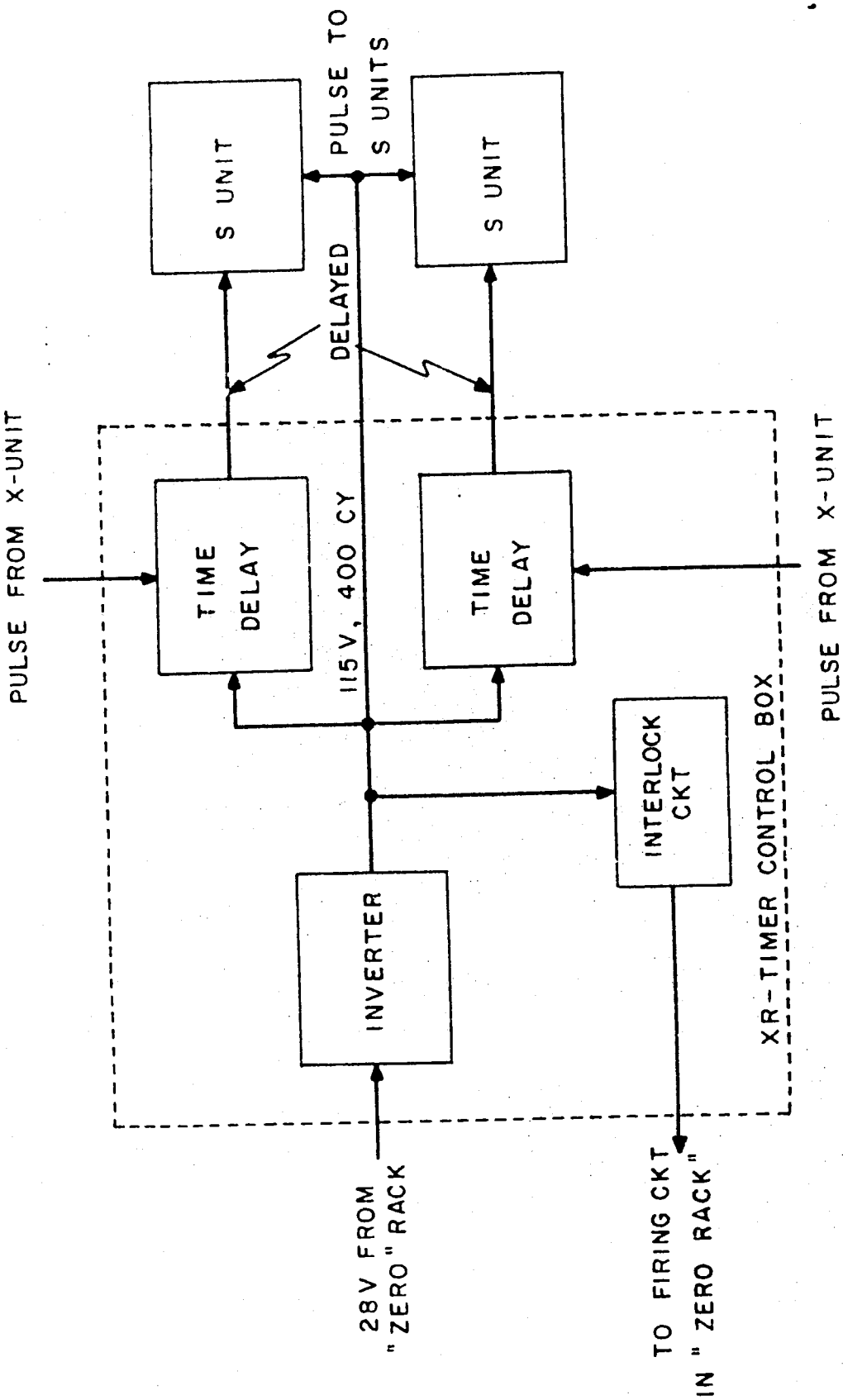

FIG. 13

DOE b(3)

UNCLASSIFIED
CONFIDENTIAL

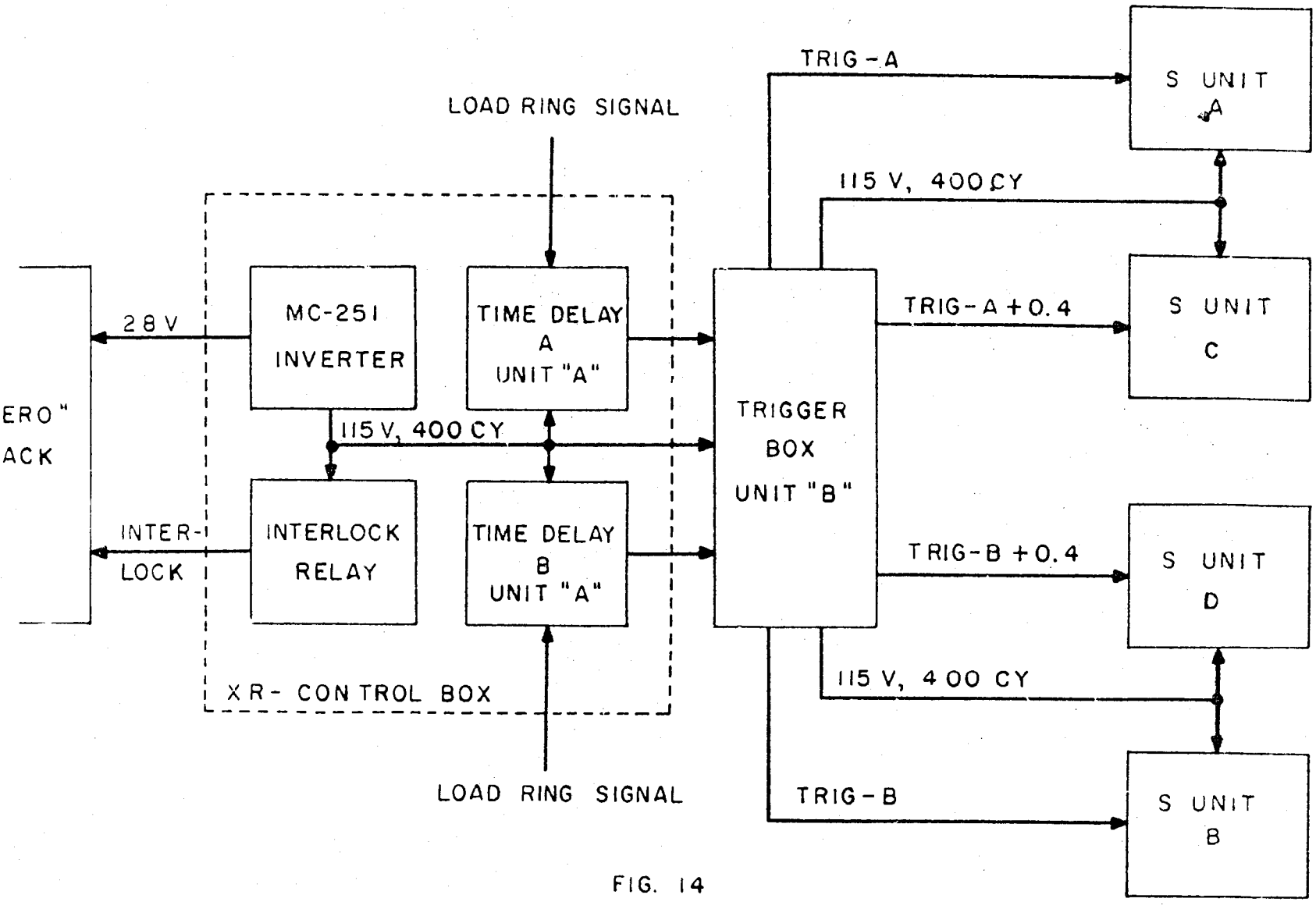

FIG. 14

XR BLOCK DIAGRAM

UNCLASSIFIED
CONFIDENTIAL

REF SYM: 7223 (SOI)

UNCLASSIFIED OFFICIAL USE ONLY

Ref. Sym: 7223(301)

INDIVIDUAL TIMER TEST PROCEDURE

Date_____ Timer S/N _____

Precision Timing Rack S/N _____

I. Preparation

(A). Precision Timing Rack

1. Connect AC power cable between regulated AC(105-125V) and Junction Box. _____

2. Turn on AC and DC Switches.

   Model I power supply. _____

   Model II power supply. _____

   Junction Box _____

   (allow fifteen minute warm-up time)

3. Turn on the Tektronix Scope and allow warm-up time of 10 minutes. _____

4. Turn on the SP-600 Receiver and perform 100KC Crystal Oscillator check with WWV (This check should be performed once a day before starting timer tests.) _____

5. Check divide by 10 circuit by observing wave shapes with scope. (Only once per day.) _____

(B). Cabling

1. AC power cable between timer and "S"-Unit Power Panel. (400 cycle 115V source.) _____

2. Trigger cable between timing Rack start connector and timer input. _____

3. Trigger cable between Timer output and Early-Late Timer input. _____

UNCLASSIFIED OFFICIAL USE ONLY

4. Trigger cable between Timing rack stop connector and Early-Late VTVO input _____

(C). Timer check (Range #1)

1. Jumper-in the 300 μμf capacitor in the IC timing control circuit. _____

2. Turn on ("S" Unit Power Panel) 400 cycle power supply and adjust to 115V. _____

3. Trigger generator switch on "Rep" rate. _____

4.

DOE b(3)

_____

5.

DOE b(3)

_____

6. Remove capacitor jumper. _____

(D). Timer check (Range #2)

1. Jumper in the 600 μμf capacitor and repeat paragraph (C).

2.

DOE b(3)

_____

3.

_____

(E). Timer Check (Range #3)

1. Jumper in the 1200 μμf capacitor and repeat paragraph (C).

2.

DOE b(3)

3.

(F). Timer Check (Range #4)

1. Jumper-in the 2400 μμf capacitor and repeat paragraph (C).

2.

DOE b(3)

3.

(G). Timer Check (Range #5)

1. Jumper-in the 4800 μμf capacitor and repeat paragraph (C).

2.

DOE b(3)

3.

Test Conducted by _____

Date _____

"S" UNIT TEST PROCEDURE

Date _____

"S" Unit S/N _____

"Z" Unit S/N _____

"S" Unit Tester S/N _____

I. Preparation

(A). "S" Unit

1. Number of times "S" Unit previously fired. _____

2. No apparent physical damage to "S" Unit case or connectors.

3. Connect power cable between "S" Unit & tester 400 cycle A.C. power. _____

4. Connect trigger cable between "S" Unit and tester. _____

5. Connect current monitor panel to "S" Unit. _____

6. Position "S" Unit in tester mount against the moderator block. _____

(B). "S" Unit Tester

1. Connect A.C. power to scaler, scintillator power supply, and delay tester. _____

2. Connect D.C. power to inverter panel. _____

3. Connect power cable between the scintillator and the scintillator power supply. _____

4. Connect trigger cable from "Det Out" connector of delay tester to scintillator negative output connector. _____

Neg.-Positive SW on scintillator to Negative. _____

5. Position scintillator adjacent to "S" Unit. _____

6. Connect cable between the Geiger tube and the Scaler Input connector. _____

7. Insert Geiger tube into the Moderator block. _____

8. Connect cable between the "To Scaler" connector on Delay Tester chassis and the "AUXILIARY" or "AUTO TIME" connector on Scaler. _____

(C). Test Equipment Adjustment

1. Scaler Master SW. ON. _____

2. Scaler High Voltage SW. ON. _____

3. Adjust Scaler High Voltage to 950 Volts. _____

4. Operation selector SW on "Time". _____

5. Scale selector SW on 1000 or 64. _____

6. Counter control SW to "COUNT". _____

7. Scintillator Power Supply SW. ON. _____

8. Scintillator Power Supply High Voltage SW. ON. _____

9. Adjust Scintillator High Voltage to 1000 V. _____

10. Delay Tester Power SW. ON and allow 15 minutes for warm-up. _____

11. Position "Z" unit adjacent to "S" unit. _____

12. Connect A.C. power cable to "Z" unit. _____

13. Turn "Z" Unit Power SW. ON and allow 3 minutes for warm-up. _____

(D). "Z" Unit Calibration

1. Operational check by complete test procedure last performed on: Date: _____

2. Set 'Zero' with Meter Zero control. _____

3. Set for No Drift with Meter Drift control. _____

4. Set for correct calibrate output reading with High Voltage Adjust Control. _____

(E). Delay Tester Calibration

1. Operational check by complete test procedure last performed on: Date: _____

2. Operate - Calibrate SW. to Calibrate _____

3. Operate the pulse control SW. to 'Test' to adjust Zero and Drift on the Delay Meter. _____

4. Check the Delay Meter calibration on the Delay Line positions:

.25 microsecond _____

.30 microsecond _____

.40 microsecond _____

.50 microsecond _____

(F). Scaler Calibration

1. Reset counter and perform 60-cycle line check. _____

2. Reset counter and check Geiger tube emission with calibration source _____

Standard Output - (±) counts _____

3. Reset counter and check the background count. _____

_____

_____

Average background count _____

UNCLASSIFIED

II. TEST

1. Operate - calibrate SW. to Operate _____

2. Pulse control SW. to ready position. _____

NOTE

Before applying power in step No. 3, prepare to take the reading in step No. 4 immediately.

3. "S" Unit power SW. ON. _____

4. Read P.I.G. Current _____ μ amps

5. Adjust Variac to 115 V A.C. Input to "S" Unit. _____

CAUTION

Do not allow input voltage to exceed 125 V.

6. "S" Unit High Voltage Monitor should read 110 ± 5 μamps. _____ μ amps

7. Allow 30-second warm-up period _____

8. Scaler register reset. _____

9. "Z" Unit calibrated and reset. _____

10. Pulse control SW. to 'Test' to fire "S" Unit. _____

11. Record "S" Unit delay. _____ μ sec.

12. Record Output per "Z" Unit. _____ DOE b(3)

13. After one minute record Scaler count _____

14. Subtract background count _____

Net Count _____

15. DOE b(3) _____ _____ _____ DOE b(3)

Note. Allow three minutes time elapse between "S" Unit firings

UNCLASSIFIED

~~OFFICIAL USE ONLY~~

16. Repeat steps 8 thru 14

Delay. _____ μ Sec.

Output per "Z" Unit. _____

"S" Unit Output per Silver Counter. _____

DOE b(3)

17. Repeat steps 8 thru 14

Delay. _____ μ Sec.

Output per "Z" Unit. _____

"S" Unit Output per Silver Counter. _____

DOE b(3)

18. Repeat steps 8 thru 14

Delay. _____ μ Sec.

Output per "Z" Unit. _____

"S" Unit Output per Silver Counter. _____

DOE b(3)

19. Repeat steps 8 thru 14

Delay. _____ μ Sec.

Output per "Z" Unit. _____

"S" Unit Output per Silver Counter. _____

DOE b(3)

20. Repeat steps 8 thru 14

Delay. _____ μ Sec.

Output per "Z" Unit. _____

"S" Unit Output per Silver Counter. _____

DOE b(3)

21. Average "S" Unit Delay _____ μ Sec.

22. Average "S" Unit Output:

Per "Z" Unit. _____

Per Silver Counter. _____

DOE b(3)

Test Conducted by: _____

Date: _____

Time: _____

Ref. Sym: 7223 (3C1)

S-UNIT AND TIMER CHECK

UNCLASSIFIED

Date _____

I. Equipment Serial Numbers

(A). VTIG _____

(B). X.R. Control Box _____

(C). X.R. Timers

1. _____ _____

2. _____ _____

(D). S-Units

1. _____ _____

2. _____ _____

(E). MC-251 _____

(F). Z-Unit

1. _____ _____

2. _____ _____

(G). Current Monitor Panels

1. Meter with #1 S-Unit _____

2. Meter with #2 S-Unit _____

(H). Control Box Monitor _____

(I). Scintillator _____

II. Preparation

(A). VTIG

1. Warm-up time (15 minutes) _____

2. Crystal Oscillator Check (WWV) _____

(Start of operational day only)

3. Check divide by 10 circuits with Tektronix scope. _____

(Start of operational day only)

4. Trigger generator (VTIG) Switch on INT. TRIG. _____

UNCLASSIFIED

(B). X.R. Control Box

1. X.R. Control chassis removed from X.R. carrying case. _____

2. Variac CCW. _____

(C). X.R. Timers

1. Connect jumper (or jumpers) for correct capacitance in LC timing circuit to give desired time range. _____

2. Install X.R. timers in X.R. control panel. _____

(D). Z-Units

1. Warm-up time (15 minutes) _____

2. Calibrate meters. _____

3. Place in position next to associated "S"-Units. _____

(E). Cabling

1. Connect D.C. power cable between X.R. Control Box and 30 Volt power supply. _____

2. Connect monitor cable between X.R. Control Box and Control Box Monitor. _____

3. Connect power cable (Channel #1) to X.R. Control Box, X.R. Timer and "S" Unit.

4. Connect power cable (Channel #2) to X.R. Control Box, X.R. Timer and "S" Unit. _____

5. Connect Current Monitor Panels

(a). Current Monitor Panel #1 to #1 "S" Unit. _____

(b). Current Monitor Panel #2 to #2 "S" Unit. _____

6. Scintillator

(a). Scintillator H.V. cable connected from power supply to input connector of scintillator. _____

(b). Scintillator output switch on positive. _____

(c). Scintillator output cable connected from positive output connector to "Photo-Mult" connector of early-late indicator. _____

(d). Scintillator Power Supply, Power and H.V. Switches to ON and adjust H.V. to 1000 Volt. _____

(Voltage can be increased for proper output)

7. Connect Trigger Cables

(a). X.R. Timer (#1) Trigger input and VTIG Start output. _____

(b). X.R. Timer (#2) Trigger input and VTIG Start output. _____

(Note: T-connector necessary).

(c). X.R. Timer #1 trigger out to Early-Late TIMER input. _____

(d). VTIG STOP output to Early-Late VTIG input. _____

III. Fire Line Interlock Set

(Caution: Never let the Inverter Voltage exceed 125 Volts A.C.)

(A). Turn on D.C. power (30 Volts) to X.R. Control Box. _____

(B). Adjust Variac to 115 V A.C. output. _____

(C). Read and record the current Monitor Panels

	P.I.G. Current	H.V. Monitor Meter
#1	_____ μ amps	_____ μ amps
#2	_____ μ amps	_____ μ amps

NOTE

H.V. Monitor meter should read 100 microamperes ± 5.

(D). Adjust Variac completely CCW.

(E) Turn off power and let cool for three minutes then turn power on again. _____

(F). Adjust pull-in potentiometer so that interlock relay pulls in at 109 volts. _____

(G). Adjust drop-out potentiometer so that interlock relay drops out at 105 volts. _____

NOTE

Make adjustments so that relay operation responds to the first 30 seconds of Inverter running time.

(H). Turn off power and let cool for three minutes then turn power on again. _____

(I). Cycle Voltage and record pull-in and drop-out readings within first thirty seconds.

Pull-in _____ V.

Drop-out _____ V.

(J). Adjust Inverter Voltage at 115 V.A.C. _____

(K). Turn Inverter off and allow to cool (do not run inverter continuously for over 10 minutes at any one time). _____

IV. Timer Set #1

(A). Overall required X.R. time #1. _____ μSec.

(B). "S"-Unit #1 Time Delay. _____ μSec.

(C). Approximate #1 Timer Setting necessary to provide overall X.R. Time. _____ μSec.

(D). Trigger generator (VTIG) Switch on Rep. _____

(E). Adjust VFO until Display Counter reads #1 X.R. Timer Time. _____

(F). Turn on D.C. Power (30V) to X.R. Control Box. _____

(G). Adjust Timer controls until the Early-Late indications flicker back and forth. _____

(H). Now vary the V.F.O. either side of the #1 X.R. Timer time and establish the smallest possible Early-Late time bracket. _____

NOTE

At this time establish how much change in the X.R. Timer Vernier dial is necessary to change the Timing 10 shakes.

_____ Dial No's.

UNCLASSIFIED

Record the final time bracket as shown by the Early-Late Indicator.

High _____ μSec.

Low _____ μSec.

V. Timer Set #2

(A). X.R. timer #1 trigger output cable removed from the Early-Late Indicator timer input and replaced with X.R. timer #2 trigger output cable. _____ μSec.

(B). Overall required X.R. time #2. _____ μSec.

(C). "S" Unit #2 time delay. _____ μSec.

(D). Approximate #2 timer set necessary to provide overall X.R. time. _____ μSec.

(E). Adjust V.F.O. until Display Counter reads #2 X.R. timer time. _____ μSec.

(F). Adjust timer controls until Early-Late indications flicker back and forth. _____ μSec.

(G). Now vary the V.F.O. either side of the #2 X.R. timer time and establish the smallest possible Early-Late time bracket.

NOTE

DOE b(3)

_____

_____

_____ Dial No's.

Record the final time bracket as shown by the Early-Late indicator.

High _____ μSec.

Low _____ μSec.

H). Turn Inverter off and let cool. (Do not run inverter continuously at any one time for over 10 minutes). _____

UNCLASSIFIED

VI. Functional Test

(A). Cabling

1. Remove X.R. timer #2 trigger output cable from the Early-Late indicator and connect to "S" Unit #2. _____

2. Trigger cable between X.R. timer #1 output and S-Unit #1. _____

NOTE

Scintillator placed adjacent to S-Unit #1.

(B). Calibration (Z-Unit)

1. Recalibrate #1 and Reset. _____

2. Recalibrate #2 and Reset. _____

(C). Trigger generator (VTIG) Switch on INT. TRIG. _____

(Caution: Never run functional test with trigger generator (VTIG) Switch on Rep.)

(D). _____ DOE b(3) _____ μSec.

NOTE

_____ DOE b(3)

(E). Turn DC power (30V) on to X.R. control box. _____

(F). Fire S-Units by means of manual trigger generator switch (VTIG). The early lamp on the Early-Late indicator should light. _____

(G). Record output and Reset the Z-Units. DOE b(3)

#1 _____ Reset _____

#2 _____ Reset _____

(H). In case the Late lamp lights on the Early-Late indicator, adjust the #1 timer controls and refire until the early lamp on the Early-Late indicator just lights. _____

UNCLASSIFIED

(I). DOE b(3)

indicator). _____ μSec.

(J). Fire S-Units by means of manual trigger generator switch.

The Late lamp lights on the Early-Late indicator. _____

(K). Record output and Reset the Z-Units DOE b(3)

#1 _____ Reset _____

#2 _____ Reset _____

(L). Overall X.R. Time Bracket. High _____ μSec.

Low _____ μSec.

(M). Record Final Dial Reading of Timer #1. _____

VII. Functional Test (#2 S-Unit)

(A). Place Scintillator adjacent to S-Unit #2. _____

(B). DOE b(3)

_____ μSec.

NOTE

DOE b(3)

(C). Fire S-Units by means of Manual Trigger generator switch.

The Early lamp lights on the Early-Late indicator.

(D). Record and Reset the Z-Units DOE b(3)

#1 _____ Reset _____

#2 _____ Reset _____

(E). In case the Late lamp lights on the Early-Late indicator, adjust the #2 timer controls and refire S-Units until the Early lamp on the Early-Late indicator just lights. _____

(F). DOE b(3)

UNCLASSIFIED

(G). Fire S-Units by means of Manual Trigger generator switch.

The Late lamp lights on the Early-Late indicator. _____

(H). Record and Reset the Z-Units DOE b(3)

#1 _____ Reset _____

#2 _____ Reset _____

(I). Overall X.R. time bracket. High _____ μSec.

Low _____ μSec.

(J). Record Final Dial Reading of timer #2. _____

Test Conducted by: _____

Time: _____

Date: _____

Ref. Sym: 7223 (301)

UNCLASSIFIED

S-UNIT AND TIMER CHECK WITH J B

Date _____

I. Equipment Serial Numbers

(A). VTIG _____

(B). X.R. Control Box _____

(C). X.R. Timers _____

1. _____ _____

2. _____ _____

(D). S-Units

1. _____ _____ _____

2. _____ _____

3. _____ _____

4. _____ _____

(E). MC-251 _____

(F). Z-Unit

1. _____ _____

2. _____ _____

3. _____ _____

4. _____ _____

(G). Current Monitor Panels

1. Meter with #1 S-Unit _____

2. Meter with #2 S-Unit _____

3. Meter with #3 S-Unit _____

4. Meter with #4 S-Unit _____

(H). Control Box Monitor _____

(I). Scintillator _____

UNCLASSIFIED

UNCLASSIFIED

(J). Junction Box _____

II. Preparation

(A). VTIG

1. Warm-up time (15 minutes) _____

2. Crystal Oscillator Check (RWV) _____

(Start of operational day only)

3. Check divide by 10 circuits with Tektronix scope. _____

(Start of operational day only)

4. Trigger generator VTIG Switch on INT. TRIG. _____

(B). X.R. Control Box

1. X.R. Control chassis removed from X.R. Carrying Case. _____

2. Variac CCW. _____

(C). X.R. Timers

1. Connect jumper (or jumpers) for correct capacitance in LC timing circuit to give desired time range. _____

2. Install X.R. Timers in X.R. control panel. _____

(D). Z-Units

1. Warm-up time (15 minutes) _____

2. Calibrate meters. _____

3. Place in position next to associated "S" Units. _____

(E). Cabling

1. Connect D.C. power cable between X.R. Control Box and 30 Volt power supply. _____

2. Connect monitor cable between X.R. Control Box and Control Box Monitor. _____

3. Connect power cable (Channel #1) to X.R. Control Box, X.R. Timer and Junction Box. _____

UNCLASSIFIED

4. Connect power cable (Channel #2) to X.R. Timer Control Box, X.R. Timer & Junction Box. _____

5. Connect power cables. _____

(a). JB #1 power output to S-Unit #1 _____

(b). JB #2 power output to S-Unit #2 _____

(c). JB #3 power output to S-Unit #3 _____

(d). JB #4 power output to S-Unit #4 _____

6. Connect Current Monitor Panels

(a). Current Monitor Panel #1 to JB #1 Connector _____

(b). Current Monitor Panel #2 to JB #2 Connector _____

(c). Current Monitor Panel #3 to JB #3 Connector _____

(d). Current Monitor Panel #4 to JB #4 Connector _____

7. Scintillator

(a). Scintillator H.V. cable connected from Power Supply to Input connector of scintillator. _____

(b). Scintillator output switch on Positive. _____

(c). Scintillator output cable connected from Positive output connector to Photo-Mult. Connector of Early-Late indicator. _____

(d). Scintillator Power Supply, Power and H.V. Switches to ON and adjust H.V. to 1000 Volt. _____
(Voltage can be increased for proper output)

8. Connect Trigger Cables.

(a). X.R. Timer (#1) Trigger input and VTIG Start output.

(b). X.R. Timer (#2) Trigger input and VTIG Start output. _____
(Note: T-connector necessary.)

(c). X.R. Timer #1 trigger output to J.B. #1 Trigger input. _____

(d). X.R. timer #2 trigger output to J.B. #2 Trigger input. _____

(e). J.B. #1 trigger out to Early-Late TIMER input. _____

(f). VTIG Stop output to Early-Late VTIG input. _____

III. Fire Line Interlock Set.

(Caution: Never let the Inverter Voltage exceed 125 V A.C.)

(A). Turn on D.C. power (30 Volts) to X.R. Control Box. _____

(B). Adjust Variac to 115 V A.C. output. _____

(C). Read and record the current Monitor Panels

	P.I.G. Current	H.V. Monitor Meter
#1	_____ amps	_____ amps
#2	_____ amps	_____ amps
#3	_____ amps	_____ amps
#4	_____ amps	_____ amps

NOTE

H.V. Monitor meter should read 110 microamperes 100 ± 5

(D). Adjust Variac completely CCW.

(E). Turn off power and let cool for three minutes then turn power on again. _____

(F). Adjust pull-in potentiometer so that interlock relay pulls in at 109 volts. _____

(G). Adjust drop-out potentiometer so that interlock relay drops out at 105 volts. _____

NOTE

Make adjustments so that relay operation responds to the first 30 seconds of Inverter running time.

(H). Turn off power and let cool for three minutes then turn power on again. _____

(I). Cycle Voltage and record pull-in and drop-out readings within first thirty seconds.

Pull in _____

Drop out _____

(J). Adjust Inverter Voltage at 115 V.A.C. _____

(K). Turn Inverter off and allow to cool (do not run Inverter continuously for over 10 minutes at any one time). _____

IV. Timer Set #1

(A). Overall required X.R. Time #1 _____ Sec.

(B). "S"-Unit #1 Time Delay _____ Sec.

(C). Approximate #1 Timer setting necessary to provide overall X.R. Time. _____ Sec.

(D). Trigger generator (VTIG) Switch on Rep. _____

(E). Adjust VFO until Display Counter reads #1 X.R. Timer Time. _____

(F). Turn on D.C. Power (30V) to X.R. Control Box. _____

(G). Adjust Timer controls until the Early-Late indications flicker back and forth. _____

(H). Now vary the V.F.O. either side of the #1 X.R. Timer Time and establish the smallest possible Early-Late time bracket.

NOTE

DOE b(3)

_____ Dial No's.

Record the final time bracket as shown by the Early-Late Indicator. High _____ Sec.

Low _____ Sec.

(I) JB trigger output #1 cable removed from Early-Late Indicator timer input and replaced with JB trigger output #3 cable. _____ Sec.

(J) Measure the JB output #3 time as close as possible with the Early-Late Indicator.

Record the final time. High _____ Sec.

Low _____ Sec.

V. Timer Set #2

(A). J.B. trigger output #3 cable removed from the Early-Late Indicator timer input and replaced with J.B. Trigger output #2 cable. _____ Sec.

(B). Overall required XR time #2. _____ Sec.

(C). "S"-Unit #2 time delay _____ Sec.

(D). Approximate #2 timer set necessary to provide overall XR time. _____ Sec.

(E). Adjust V.F.O. until Display Counter reads #2 XR timer time. _____ Sec.

(F). Adjust timer controls until Early-Late indications flicker back and forth. _____

(G). Now vary the V.F.O. either side of the #2 XR timer time and establish the smallest possible Early-Late time bracket.

NOTE

DOE b(3)

_____ Dial No's

Record the final time bracket as shown by the Early-Late indicator. High _____ Sec.

Low _____ Sec.

(H). J.B. trigger output #2 cable removed from the Early-Late indicator and replaced with J.B. trigger output #4 cable. _____

(I). Measure the time as close as possible with the Early-Late indicator. Record final time bracket. High _____ Sec.

Low _____ Sec.

(J). Turn Inverter off and let cool. (Do not run inverter continuously at any one time for over 10 minutes). _____

VI. Functional Test

(A). Cabling

1. Remove J.B. trigger output #4 cable from the Early-Late indicator and connect to "S"-Unit #4. _____
2. Trigger cable between J.B. output #3 and S-Unit #3. _____
3. Trigger cable between J.B. output #2 and S-Unit #2. _____
4. Trigger cable between J.B. output #1 and S-Unit #1. Scintillator placed adjacent to S-Unit #1. _____

(B). Calibration (Z-Unit)

1. Recalibrate #1 and reset. _____
2. Recalibrate #2 and reset. _____
3. Recalibrate #3 and reset. _____
4. Recalibrate #4 and reset. _____

(C). Trigger generator (VTIG) switch on Int. trigger. _____

(Caution: Never run functional test with trigger generator VTIG switch on Rept.) _____

(D). _____ (DOE b(3)) _____ Sec.

UNCLASSIFIED

NOTE

10 shakes compensates for the delay in the Early-Late indicator.

(E). Turn DC power (30V) on to XR control box. _____

(F). Fire S-Units by means of manual trigger generator switch (VT-G). The Early lamp on the Early-Late indicator should light. _____

(G). Record output and reset the Z-Units.

DOE b(3)

#1 _____ Reset _____

#2 _____ Reset _____

#3 _____ Reset _____

#4 _____ Reset _____

(H). In case the Late lamp lights on the Early-Late indicator, adjust the #1 Timer controls and Refire until the Early lamp on the Early-Late indicator just lights. _____

(I). DOE b(3) _____

(J). Fire S-Units by means of manual trigger generator switch. The Late lamp lights on the Early-Late indicator. _____

(K). Record output and reset the Z-Units.

#1 _____ Reset _____

#2 _____ Reset _____

#3 _____ Reset _____

#4 _____ Reset _____

(L). Overall XR Time Bracket. DOE b(3) High _____ Sec.

Low _____ Sec.

(M). Record Final Dial Reading of Timer #1. _____

VII. Functional Test (#3 S-Unit)

(A). Place Scintillator Adjacent to S-Unit #3. _____

(B).] DOE b(3) _____ Sec.

(C). Fire S-Units by means of Manual trigger generator switch.

The Early lamp lights on the Early-Late indicator. _____

(D). Record output and reset the Z-Units

] DOE b(3)

#1 _____ Reset _____

#2 _____ Reset _____

#3 _____ Reset _____

#4 _____ Reset _____

(E).] DOE b(3) _____ Sec.

(F). Fire S-Units by means of Manual trigger generator switch.

The Late lamp lights on the Early-Late indicator. _____

(G). Record and Reset the Z-Units

] DOE b(3)

#1 _____ Reset _____

#2 _____ Reset _____

#3 _____ Reset _____

#4 _____ Reset _____

(H). Overall XR time bracket. High _____ Sec.

Low _____ Sec.

VIII. Functional Test (#2 S-Unit)

(A). Place Scintillator adjacent to S-Unit #2. _____

(B).] DOE b(3) _____ Sec.

NOTE

] DOE b(3)

UNCLASSIFIED

(C). Fire S-Units by means of Manual Trigger generator switch.

The Early lamp lights on the Early-Late Indicator.

(D). Record and Reset the Z-Units.

DOE b(3)

#1 _____ Reset _____

#2 _____ Reset _____

#3 _____ Reset _____

#4 _____ Reset _____

(E). In case the Late lamp lights on the Early-Late indicator, adjust the #2 timer controls and refire S-Units until the Early lamp on the Early-Late indicator just lights. _____

(F). DOE b(3)

_____

(G). Fire S-Units by means of Manual Trigger generator switch.

The Late lamp lights on the Early-Late indicator. _____

(H). Record and Reset the Z-Units.

DOE b(3)

#1 _____ Reset _____

#2 _____ Reset _____

#3 _____ Reset _____

#4 _____ Reset _____

(I). Overall XR time bracket. High _____ Sec

Low _____ Sec

(J). Record Final Dial Reading of Timer #2. _____

IX. Functional Test (#4 S-Unit)

(A). Place scintillator adjacent to S-Unit #4. _____

(B). _____ Sec.

DOE b(3)

UNCLASSIFIED

(C). Fire S-Units by means of Manual trigger generator switch.

The Early lamp lights on the Early-Late indicator. _____

(D). Record and reset the Z-Units

DOE b(3)

#1 _____ Reset _____

#2 _____ Reset _____

#3 _____ Reset _____

#4 _____ Reset _____

(E).

DOE b(3)

_____ Sec.

(F). Fire S-Units by means of Manual trigger generator switch.

The Late lamp lights on the Early-Late indicator. _____

(G). Record and reset the Z-Units

DOE b(3)

#1 _____ Reset _____

#2 _____ Reset _____

#3 _____ Reset _____

#4 _____ Reset _____

(H). Overall XR time bracket.

High _____ Sec.

Low _____ Sec.

Test Conducted By: _____

Time: _____

Date: _____

For the XR Zero Points checks the check sheets on pages 52 through 59 will be used. This includes all tests up through the final dry run.

Peronnel from Task Unit Six will perform firing party duties as required on XR equipment.

Security

The classification of S-units is Secret Restricted Data. These units are no longer SS accountable.

Information indicating that test weapons are being externally initiated, that Sandia Corporation is interested in a pulsed neutron source or that weapon systems may be externally initiated shall be protected as Secret Restricted Data.

Reference to E N.S. when associated with Sandia Corporation in items such as zero racks. firing systems, etc. shall be protected as Secret Restricted Data It is preferred that E.N.S. be discontinued from use because its meaning is considered compromised. The use of XR as a code name of the external initiator system, and S-Unit for a pulsed neutron source is desired as these code names are unclassified. Relation of these code names to their definitions shall be Secret restricted data.

B.J. CARR, 1414

Case No 415.00
March 28, 1956

UNCLASSIFIED

XR ZERO POINT CHECKS

Shot _____

Date _____

I. Equipment

(A). Firing

1. "S" Units S/N #1 _____
#2 _____
#3 _____
#4 _____

2. X.R. Control Box S/N _____

3. Timers S/N #1 _____
#2 _____

4. Junction Box S/N _____

5. "S" Unit Trigger Cables:
L.R. Signal to Timers (2) _____
Timers to Junction Box (2) _____
Junction Box to "S" Unit (4) _____
OR Timers to "S" Unit (2) _____

6. "S" Unit Power Cables:
X.R. Control Box to Junction Box (2) _____
Junction Box to "S" Unit (4) _____
OR X.R. Control Box to "S" Unit (2) _____

7. X.R. Control Box to Zero Rack Cable _____

8. Record required time readings on page 5. _____

(-2-)

(B). Testing

1. "Z" Units: S/N #1 _____
#2 _____
#3 _____
#4 _____

2. A.C. Power Cables (4) _____

3. Control Box Monitor and Cable _____

4. "S" Current Meters and Cables #1 _____
#2 _____
#3 _____
#4 _____

5. "S" Unit test Stands (4) _____

6. "S" Unit Pulser _____

7. Connector caps #14 (4) _____

8. Connector caps #20 (1) _____

9. X.R. Control Box (D.C. Test) cable _____

10. Simpson Meter _____

11. Tool Box _____

12. Other Equipment: _____

_____

_____

_____

II. Pre Dry-Run Check

(A). Preparation

1. Position "S" Units next to "Z" units with a minimum

separation of 18".

2. Connect "Z" Units to A.C. Power.

3. Turn on "Z" Units to allow three minutes warm-up.

4. Connect power cables from the X.R. Control Box to the Junction Box and from the Junction Box to the "S" Units.

   OR connect power cables from the X.R. Control Box to the "S" Units.

5. Connect D.C. Test power cable from the X.R. Control Box to the Zero Rack Battery.

6. Connect the Control Box Monitor to the X.R. Control Box.

7. Connect the "S" Unit Current Monitor Meters to the Junction Box.

   OR To the "S" Units.

8. Connect "S" Unit trigger cables from the Timers to the Junction Box, and from Junction Box to the "S" Units.

   OR Connect from Timers to the "S" Units.

9. Connect trigger cables from the Pulser to the Timers.

10. Remove X.R. Control Box Chassis from carrying case and turn Variac completely CCW.

11. Check all equipment for proper geometrical arrangement.

(B). Test

1. Turn on D.C. Power to the X.R. Control Box and adjust

Variac for 115 V. A.C. output. _____

2. Check the "S" Unit Monitor Currents:

	Initial P.I.G.	Charge
#1	_____ µamps	_____ µamps
#2	_____ µamps	_____ µamps
#3	_____ µamps	_____ µamps
#4	_____ µamps	_____ µamps

3. Check the setting of the Under-voltage relay:

Pull-in _____ Volts.

Drop-out _____ Volts.

4. Adjust Variac for 115 V. A.C. Output _____

(A). Record AC Voltage reading (X.R. Control Box) _____

5. Calibrate and reset "Z" Units _____

6. Fire the "S" Units with the Output from the Pulser and record "Z" Unit readings:

	Reading	Output
#1	_____ amps	_____
#2	_____ amps	_____
#3	_____ amps	_____
#4	_____ amps	_____

DOE b(3)

7. Disconnect D.C. Power to X.R. Control Box. _____

III. Functional Dry-Run

(A). Preparation:

1. Remove control box Monitor along with cable and place protective cap over control box connector.

2. Remove "S" Unit Current Monitor Meters and place protective caps over vacant cable connectors of Junction Box or Cable. _____

3. Remove "Z" Units and power cables. _____

4. Remove D.C. test cable between X.R. Control Box. _____

5. Connect cable between Zero Rack and X.R. Control Box. _____

6. Remove trigger cables from the Pulser and connect to Load Ring or the Isolation Boxes. _____

7. Place X.R. Control Chassis in carrying case and secure all latches. NOTE: Be careful not to disturb Variac dial setting. _____

8. Place "S" Units in mounts and check for proper spacing and location on the device. _____

9. Check geometry in relation to the Neutron Detectors with Project 13.3 Personnel. _____

10. Check final arrangement and all cable connections. _____

(B). Test

1. Required times for this shot:

#1 _____ Sec. #2 _____ Sec.

#3 _____ Sec. #4 _____ Sec.

2. Time Variation by the Microdial: _____

DOE b(3)

3. ~~Receive Arm Signal~~ from Control Point _____

Record D.C. Voltage. _____

Record Inverter Output Voltage. _____

4. Receive Fire signal from Control Point: _____

Record timing and output per Project 13.3

(a) Detector 1 _____ Sec. _____

_____ Sec. _____

(b) Detector 2 _____ Sec. _____

_____ Sec. _____

DOE b(3)

5. Check the delay times as recorded against those required:

(a) The times agree. _____

(b) If the time is off, adjust the Timer Microdial the correct amount as shown in step 2. _____

Repeat steps 3 and 4:

Receive Arm Signal: _____ V.

Record D.C. Voltage. _____ V.

Record Inverter Output _____ V.

Receive Fire Signal: _____

Record timing and output:

Detector 1 _____ Sec. _____

_____ Sec. _____

Detector 2 _____ Sec. _____

_____ Sec. _____

DOE b(3)

6. Disconnect equipment and place in case for protection.

Replace cover on control box. _____

Tests Conducted by: _____ _____

Completion time: _____

Date: _____

DATE: _____

IV. Final Dry-Run

(A). Preparation

1. Position Equipment:

(a) Remove Control Box cover and position. _____

(b) Remove other equipment from case. _____

(c) Secure "S" Units in mounts and check for proper spacing and location on device. _____

(d) Check geometry in relation to the Neutron Detectors with Project 13.3 personnel. _____

(e) Install plastic bag around X.R. Control Box. _____

2. Connect Trigger Cables.

(a) X.R. Control Box to JB and Timer. 2 ea. _____

(b) (when JB not used) X.R. Control Box to S-Units. 2 ea. _____

(c) JB to S-Units. 4 ea. _____

(d) X.R. Control Box Timers to Load Ring. 2 ea. _____

3. Connect Power Cables. _____

(a) X.R. Control Box to JB and Timer. 2 ea. _____

(b) (when JB not used) X.R. Control Box to S-Units. 2 ea. _____

(c) JB to S-Units. 4 ea. _____

(d) X.R. Control Box to Zero Rack 1 ea. _____

(B). Test

1. Receive Arm Signal from Control Point: _____

Record D.C. Voltage _____ V.

Record Inverter Output Voltage. _____ V.

2. Receive Fire Signal from Control Point:

Record timing and output for Project 13.3:

(a) Detector 1 _____ Sec. _____

_____ Sec. _____

(b) Detector 2 _____ Sec. _____

_____ Sec. _____

DOE b(3)

3. Check times and outputs against requirements for this shot as shown on Page 5. _____

(C). Final Arrangement

1. Remove Trigger cables between timers and Load Ring and turn over to TU-6 Representative. _____

2. Protect equipment from weather as needed. _____

Test Conducted by: _____

Date: _____

This is an exact Copy:
Date: 8/6/97 Org.: 4916
Initials: Ebm
Forwarded to: _____
MS- _____