THIS DOCUMENT CONSISTS OF 66 PAGE(S)
NO 1 OF 4 COPIES, SERIES IS-4A
DP-32HAI89 AD012

SECRET

UNCLASSIFIED

SAA20005774 0000
DOCUMENT#

LA-4577
ATOMIC WEAPON DATA
CATEGORY SIGMA 1

CRITICAL NUCLEAR WEAPON
DESIGN INFORMATION PER
DOD DIRECTIVE 5210.2

LOS ALAMOS SCIENTIFIC LABORATORY
of the
University of California
LOS ALAMOS • NEW MEXICO

Written: November 1970

Distributed: April 1971

MRV Verification by On-Site Inspection (U)

by

W. H. Chambers
H. F. Atwater
J. T. Caldwell
W. E. Mauldin
N. Nicholson
T. E. Sampson
G. M. Worth
T. H. Whittlesey

*18 7-3257

1/4IS-4A $*

DEPARTMENT OF ENERGY DECLASSIFICATION REVIEW	
1ST REVIEW-DATE: 3-2-95	DETERMINATION [CIRCLE NUMBER(S)]
AUTHORITY: ☐AOC ☐ADC ☒ADD	(1) CLASSIFICATION RETAINED
NAME: RA Carpenter	2. CLASSIFICATION CHANGED TO:
2ND REVIEW-DATE: 3-28-95	3. CONTAINS NO DOE CLASSIFIED INFO
AUTHORITY: ADD	4. COORDINATE WITH:
NAME: [illegible]	5. CLASSIFICATION CANCELLED
	(6) CLASSIFIED INFO BRACKETED
	(7) OTHER (SPECIFY): Concurrence in bag

ACDA, CIA, NN40, DOD, Navy, AIR FORCE

UNITED STATES
ATOMIC ENERGY COMMISSION
CONTRACT W-7405-ENG. 36

[illegible] 3/23/90
RA Carpenter 3-23-90

RESTRICTED DATA

This document contains restricted data as defined in the Atomic Energy Act of 1954. Its tra mittal or the disclosure of its contents in any manner to an unauthorized person is prohibit

Group 1 - Excluded from automatic downgrading and declassification

SECRET

UNCLASSIFIED

R281 142 151

Att 1

8706315A

UNCLASSIFIED ~~SECRET~~

ATOMIC WEAPON DATA
Category Sigma 1
LA-4577

USAEC, Headquarters Library, Reports Section, Washington, D. C.	1-3
Division of Military Application, Washington, D. C. Attn: Donald I. Gale	4-6
Director, Office of Safeguards and Materials Management, Washington, D. C. Attn: Brig. Gen. D. A. Crowson	7
U. S. Arms Control and Disarmament Agency, Washington, D. C. Attn: Lt. Col. Kenneth Bull (10 copies) James Shea (1 copy)	8-18
Manager, ALO, Albuquerque, New Mexico Attn: Myron Roepke	19
Lawrence Radiation Laboratory, Livermore, California Attn: Robert daRoza	20-21
Sandia Laboratories, Albuquerque, New Mexico Attn: Allen M. Fine	22
Military Liaison Committee, Washington, D. C.	23
Director, Defense Research and Engineering, Washington, D. C. Attn: W. W. Carter	24
Assistant to the Secretary of Defense, Department of Defense, Washington, D. C. Attn: Carl Walske	25
Headquarters, DASA, Washington, D. C. Attn: John Northrup	26-27
DASA Field Command, Albuquerque, New Mexico	28-30
Commanding General, Army Combat Developments Command, Fort Belvoir, Virginia	31-32
Commanding General, Army Materiel Command	33
DCS/Operations, Army, Washington, D. C.	34
Chief, R&D, Army, Washington, D. C.	35
Naval Ordnance Systems Command, Washington, D. C.	36
Chief of Naval Operations (OP-75), Washington, D. C.	37
DCS/Research and Development, Headquarters, USAF, Washington, D. C.	38
Director, Air Force Weapons Laboratory, Kirtland Air Force Base, New Mexico	39-41
Headquarters, Space and Missile Systems Organization, Los Angeles, California Attn: Lt. Col. Jack Clement	42-43
Los Alamos Report Library	44-100

~~SECRET~~ UNCLASSIFIED

CONTENTS

Abstract 1

I. Introduction 1

II. Detection System 2
- A. Survey Instruments 2
- B. Passive Gamma-Ray Scan 2
- C. Passive Neutron Scan 3
- D. Gamma-Ray Transmission 5
- E. (γ, n) Activation 7
- F. Analyzer-Calculator System 7
- G. Support and Spare Equipment 7
- H. General Comments 8
  - 1. Calibration and Equipment Checks 8
  - 2. Deployment of Prototype Equipment 10

III. Experimental and Theoretical Results 11
- A. Passive Gamma Technique 11
  - 1. Gamma Emission from Weapon Materials 11
  - 2. W59 13
  - 3. Pantex Passive Gamma Data 13
  - 4. POMFLANT Passive Gamma Data 16
  - 5. Minot Passive Gamma Data 20
- B. Passive Neutron Technique 23
  - 1. Detector and Collimator Development 23
  - 2. Weapon System Measurements 24
  - 3. Neutron Spectra from Plutonium Primaries 28
- C. Gamma Transmission Technique 30
  - 1. Source and Detector 30
  - 2. Developmental Results 31
  - 3. Dynamic Range and Spatial Resolution 34
- D. Radioactive Source (γ, n) Technique 36
  - 1. Introduction 36
  - 2. Neutron Detector 36
  - 3. Gamma Sources 37
  - 4. Gamma-Ray Shield and Collimator 37
  - 5. (γ, n) Experimental Measurements 38
  - 6. (γ, n) Calculations 39

IV. Inspection Intrusiveness 41

V. Countermeasures 42
- A. Inspection Equipment Vulnerability 42
- B. Radiation Backgrounds 43
- C. System Design Countermeasures 43

SECRET UNCLASSIFIED

CONTENTS (cont.)

VI. Operational Considerations 43
A. Mechanical Fixtures 43
B. Inspection Team 43
C. Inspection Time 44

VII. Summary and Conclusions 44

Acknowledgments 45

References 45

APPENDIX: AD HOC WORKING GROUP REPORT 46

A. Introduction 46

B. System Definition and Environment 46
1. System Definition 46
2. Environmental Background Radiation 46
3. Warhead Radiation 46

C. Capability of the Prototype Equipment 47

D. Countermeasures 47
1. General 47
2. Evasion 47
a. General 47
b. Passive Gamma Ray 47
c. Passive Neutron 48
d. Gamma-Ray Transmission 49
e. Photoneutron Activation 49
f. Evaluation of Evasion Methods 50
g. Special Evasion Techniques 50
(1) High-Density Cover for Multiple Warheads 51
(2) Dual (Tandem) Warheads 53
(3) Special-Purpose Payload 53
h. Evasion by Special Placement of RVs 53
i. Evasion by RV Substitution 54

E. Intrusiveness 55
1. General 55
2. Current Technologies 55
3. Future Systems and Other Considerations 58

F. Conclusions 58

UNCLASSIFIED SECRET

FIGURES

1. Survey instruments 3
2. Block diagram, passive gamma-ray system 3
3. Passive gamma system 4
4. Passive gamma-ray collimator assembly 4
5. Block diagram, passive neutron system 4
6. Passive neutron system 5
7. Passive neutron collimator 5
8. Block diagram, gamma transmission system 6
9. Gamma transmission system 6
10. Block diagram, (γ, n) system 7
11. (γ, n) system 8
12. (γ, n) slab detector with source shield 9
13. Block diagram, analyzer-calculator system 9
14. Analyzer system 9
15. ^{238}U small-sample gamma spectrum plotted with analyzer-calculator system 9
16. Expanded region of interest for spectrum of Fig. 15. 10
17. Support and spare equipment 10
18. 11
19. 7/27/70 Run 2. W53 at secondary. Detector 49-5/8 in. from centerline of warhead. Run time = 1000 sec. 15
20. 7/27/70 Run 4. W62 in channel with wide collimator. Detector 32-1/2 in. from centerline of warhead. Run time = 1000 sec. 15
21. 7/27/70 Run 15. W68 at primary. Detector 34 in. from centerline of warhead. Run time = 1000 sec. 17
22. 7/27/70 Run 13. W56 at primary. Detector 44 in. from centerline of warhead. Run time = 1000 sec. 17
23. 7/27/70 Run 10. Mk 28-Y3 at primary. Detector 28 in. from centerline of weapon. Run time = 1000 sec. 18
24. 7/29/70 Run 14, NaI. Mk 28-Y3 at primary. Detector 31-3/4 in. from centerline of weapon. Collimator 7 in. long by 1-1/4 in. diameter. Run time = 1800 sec. 18

25. 7/27/70 Run 16. Mk 43-Y1 at primary. Detector 31-1/2 in. from centerline of weapon. Run time = 1000 sec. 19

26. Schematic of linear passive gamma scans on Polaris A-3. Warhead positions at the primary elevation are given by concentric circles. 19

27. NRL passive gamma scan at primary section of Polaris A-3. Ge(Li) detector ≈ 31 in. from axis of A-3. Linear scan with collimation 1 by 4 in. Run time = 240 sec. 19

28. LASL passive gamma scans at primary section of Polaris A-3. Ge(Li) detector ≈ 55 in. from axis of Polaris A-3. Linear scan with collimation 1 by 4 in. Run time = 400 sec. 20

29. LASL axial passive gamma scan of Polaris A-3. Ge(Li) detector ≈ 55 in. from axis of Polaris A-3. Collimation 1 by 4 in. Run time = 400 sec. 20

30. 9/28/70 Run 8. Polaris A-3, W58 warhead at primary location. Detector 55 in. from axis of Polaris A-3 with 1 by 4 in. collimation. Run time = 400 sec. 21

31. 9/28/70 Run 12. Polaris A-3, W58 warhead at secondary location. Detector 55 in. from axis of Polaris A-3 with 1 by 4 in. collimation. Run time = 400 sec. 21

32. Schematic layout of Minuteman III warhead system. 22

33. Axial passive gamma scan of Minuteman III, W62 MRV. Ge(Li) detector 46-1/8 in. from axis of missile, collimation 1 by 5-3/8 in. Run time = 200 sec. 22

34. Circular passive gamma scan at primary section of Minuteman III, W62 MRV in assembly bay. Ge(Li) detector 46 in. from center of reentry system with 3/4 by 5-3/8 in. collimation. Run time = 200 sec. 22

35. Circular passive gamma scan at primary elevation of Minuteman III, W62 MRV in an operational silo. Ge(Li) detector 41-1/2 in. from center of reentry system with 3/4 by 5-3/8 in. collimation. Run time = 200 sec. 23

36. Linear passive gamma scan at primary elevation of Minuteman III, W62 MRV. Ge(Li) detector 46 in. from axis of reentry system at tangent point. Collimation 3/4 by 5-3/8 in. Run time = 200 sec. 23

37. Measured and calculated collimator response function for 2 by 8 in. collimator, source at 50 cm. 24

38. PRD–PSD scan (vertical), 2-3/8 by 5 in. collimator scan of Mk 28. 24

39. PRD–PSD scan (vertical), 2-3/8 by 5 in. collimator scan of W68. 25

40. Schematic layout of Mk 28 mock MRV. 25

41. 2 by 8 in. collimator circumferential scan of Mk 28 mock MRV. 25

42. Linear scan of Polaris A-3 on doublet side, 2 by 8 in. collimation. 26

43. Linear scan of Polaris A-3 on singlet side, 2 by 8 in. collimation. 26

44. Linear scan (1.5 by 8 in. and 2.0 by 8 in.) of Minuteman III on singlet side. 26

45. Circumferential scan of Minuteman III in AS&I building. 27

46. Circumferential scan of Minuteman III in operational silo. 27

47. Calculated spontaneous fission neutron spectrum from W62 (Mk 12) primary at outer surface of reentry vehicle. 28

48. Calculated composite neutron spectrum from W62 (Mk 12) primary at outer surface of reentry vehicle. 29

49. Measured proton recoil pulse height distribution corresponding to neutron spectrum from Mk 43 primary. 29

50. Measured proton recoil pulse height distribution corresponding to neutron spectrum from W62 (Mk 12) primary. 29

51. Calculated neutron spectrum from ^{240}Pu spontaneous fission source surrounded by HE. 30

52. Measured proton recoil pulse height distribution corresponding to neutron spectrum from bare pit. 30

53. Measured proton recoil pulse height distribution corresponding to neutron spectrum from pit surrounded by 4 in. of mock HE. 30

54. Gamma transmission scan along the axis of the W62. 31

55. Gamma transmission scan of the W53 across the primary region. 31

56. Gamma transmission scan of the W53 across the secondary region. 32

57. Schematic layout for the singlet and doublet geometries used with the gamma transmission technique. 32

58. Singlet gamma transmission scan of the Mk 28 mock MRV across the primary region using the Ge(Li) detector. 32

59. Singlet gamma transmission scan of the Mk 28 mock MRV across the primary region using the NaI detector. 33

60. Doublet gamma transmission scan of the Mk 28 mock MRV across the primary region. 33

61. Singlet gamma transmission scan of the Polaris A-3 across the secondary region. 33

62. Doublet gamma transmission scan of the Polaris A-3 across the secondary region. 34

63. Singlet gamma transmission scan of the Minuteman III across the secondary region. 34

64. Doublet gamma transmission scan of the Minuteman III across the secondary region. 34

65. Axial gamma transmission scan of the Minuteman III. The detector was at the doublet location. 34

66. Singlet gamma transmission scan of the Minuteman III across the secondary region. This scan was made on a deployed system in an operational silo. 35

67. Gamma transmission data showing the result of background subtraction. The background was introduced 35

68. Gamma transmission data showing the influence of data-taking rate on linear spatial resolution. . . . 36

69. (γ, n) detector relative gamma and neutron sensitivities as a function of detector bias. . . . 37

70. XW67 (γ, n) scan with 25 mCi source and 40 cm source-to-centerline distance. . . . 39

71. W53 (γ, n) scan perpendicular to axis at center of gravity with 70 cm source-to-centerline distance. . . . 40

72. W53 (γ, n) scan at spherical end with 49 cm source-to-centerline distance. . . . 40

73. SORS Monte Carlo neutron calculation of (γ, n) spectral output comparing . . . 41

A-1. reentry vehicle. . . . 48

A-2. . . . 51

A-3. . . . 52

A-4. . . . 52

A-5. . . . 53

A-6. . . . 53

A-7. . . . 54

A-8. . . . 54

A-9. . . . 55

DOE/nc. b(3)

TABLES

I. Weapon Design Characteristics . . . 12

II. Relative Intensity—^{238}U Lines . . . 14

III. Collimated 2 by 2 in. PRD Count Rates for Various Weapons Systems . . . 27

IV. . . . 30

V. Example of Degraded Statistical Accuracy Due to Background . . . 35

VI. Linear Dimensions Inferred from the Gamma Transmission Scan of the Minuteman III, Figure 65 . . . 36

VII. (γ, n) Experimental Results with 25-mCi, 2.6-MeV Source . . . 38

VIII. Scaled (γ, n) Count Rates for a 250-mCi, 2.6- or 2.76-MeV Source at 100 cm . . . 39

IX. Calculated and Experimental α's . . . 41

X. Obtainable Design Information . . . 42

A-1 Evaluation of Evasion Method . . . 50

A-2 Categories of Possible Discovery . . . 56

SECRET UNCLASSIFIED

MRV VERIFICATION BY ON-SITE INSPECTION

by

W. H. Chambers
H. F. Atwater
J. T. Caldwell
C. N. Henry
J. J. Malanify
W. E. Mauldin
N. Nicholson
T. E. Sampson
T. H. Whittlesey
G. M. Worth

ABSTRACT

To provide technical support for a possible bilateral treaty limiting the deployment of multiple warheads on strategic missile systems, a prototype detection system to verify a predeclared number of warheads per missile by on-site, hands-off inspection from outside the missile shroud was developed and field-tested in an accelerated (six-month) program.

I. Introduction

As one result of previous and continuing work with the Arms Control and Disarmament Agency (ACDA) on FT-25,[1] LASL was asked in late April 1970 to propose an accelerated effort to establish the technical feasibility of verifying multiple warheads inside a missile shroud by on-site inspection. By mid-May, the request to the AEC for cooperation with ACDA had been formalized, and a plan for a six-month program had been presented by LASL to ACDA and other concerned agencies. It was agreed that the existing FT-25 Joint Working Group (JWG) would continue to coordinate the interagency aspects of the problem, and guidelines that further elaborated on the six-month effort were prepared by the working group.[2]

UNCLASSIFIED

SECRET

an ad hoc committee was established under the auspices of the FT-25 JWG to independently examine these questions. The report of the committee is reproduced in the Appendix. Additional relevant material is contained in an independent survey by Lawrence Radiation Laboratory.[4]

In addition to the major objectives noted above, the program has served as anticipated to emphasize some of the scenario-related aspects of the negotiation and conduct of an on-site inspection. Recommendations to ACDA in this regard are included where relevant to technical or operational considerations.

This report is intended to summarize all aspects of the investigation and therefore is necessarily classified *in toto*. A general familiarity with nuclear weapon and nuclear detector technology is assumed throughout. Some portions of the report are clearly unclassified, and some would require declassification for any successful negotiation. Obviously, it is beyond the scope and responsibility of this report to establish such policy.

II. Detection System

A brief description of the various subsystems comprising the complete prototype equipment is given here. Detailed specifications and operating instructions for the commercial equipment are available in the appropriate manuals. Additional comments on operational considerations appear in Section VI.

A. Survey Instruments

The survey instruments listed below and shown in Fig. 1 are provided with the ACDA prototype equipment.

Victoreen Rad III gamma meter
Eberline PNR-4 neutron meter
Ludlum Model 139 alpha meter
Dosimeters
Dosimeter Charger

These will not be used to take data in the inspection sense but to (1) monitor for health hazards, (2) ascertain whether the backgrounds are so high as to preclude an inspection, (3) verify the integrity of source containers, and (4) provide spatial guidance in the application of the more sensitive inspection techniques.

The dosimeters are placed around the missile to ascertain dose received from the warhead material or dose received by the missile from the radioactive sources used in the inspection. The dosimeters can also be worn by members of the inspection team as a continuous monitor of the total integrated dose received during the inspection period.

B. Passive Gamma-Ray Scan

The useful gamma-ray energy range for uranium or plutonium extends from below 100 keV to above 2.6 MeV. In scanning, a series of gamma-ray spectra are collected at discrete locations circumferentially around the shroud and axially along the shroud. The total number of required locations is probably 100 or less. A counting time between 100 and 400 sec at each location is usually required with medium-to-high-efficiency Ge(Li) detectors to obtain a sufficient number of counts for an inspection. Grid spacing is also at the discretion of the inspector but is likely to be no finer than 5° or 3 in. in selected regions. Each spectrum is stored in 1024 channels in a multichannel pulse height analyzer and read out onto punched paper tape. The total time required by this technique is approximately 8 h.

After a series of runs, the paper tapes may be read back into the multichannel analyzer to reproduce a set of data for the host. Preliminary analysis of these data may be done at the inspection site (to assure the inspector that sufficient data have been taken) by subtracting the Compton background from the gamma-ray peaks of interest and then constructing a spatial mosaic. The field analysis capability is discussed further in the analyzer-calculator description (Section II.F).

Figures 2 and 3 show the passive gamma system, which includes a high-resolution, high-efficiency Ge(Li) detector mounted in a cryostat in a 10-liter liquid nitrogen dewar. The dewar has a liquid nitrogen capacity sufficient to protect the crystal for 7 to 10 days. The detector assembly is mounted in a lead collimator (Fig. 4) with a Canberra 1408C preamplifier attached to it. The detector-collimator assembly weighs $\approx$ 250 lb and is 2.8 ft^3 in volume. The main electronic package, consisting of a Tennelec TC 203 BLR amplifier and a Power Designs AEC 1000 high-voltage power supply mounted in a Berkeley Nucleonic AP-1 Portanim, weighs 20 lb and is 0.18 ft^3 in volume. Power consumption is $<$ 750W including the analyzer-calculator system described separately. The main electronic package may be operated adjacent to the detector assembly or at a distance up to 40 ft. The linear output pulses are routed to the Hewlett-Packard multichannel analyzer system operated in the pulse-height-analysis mode for collection and analysis.

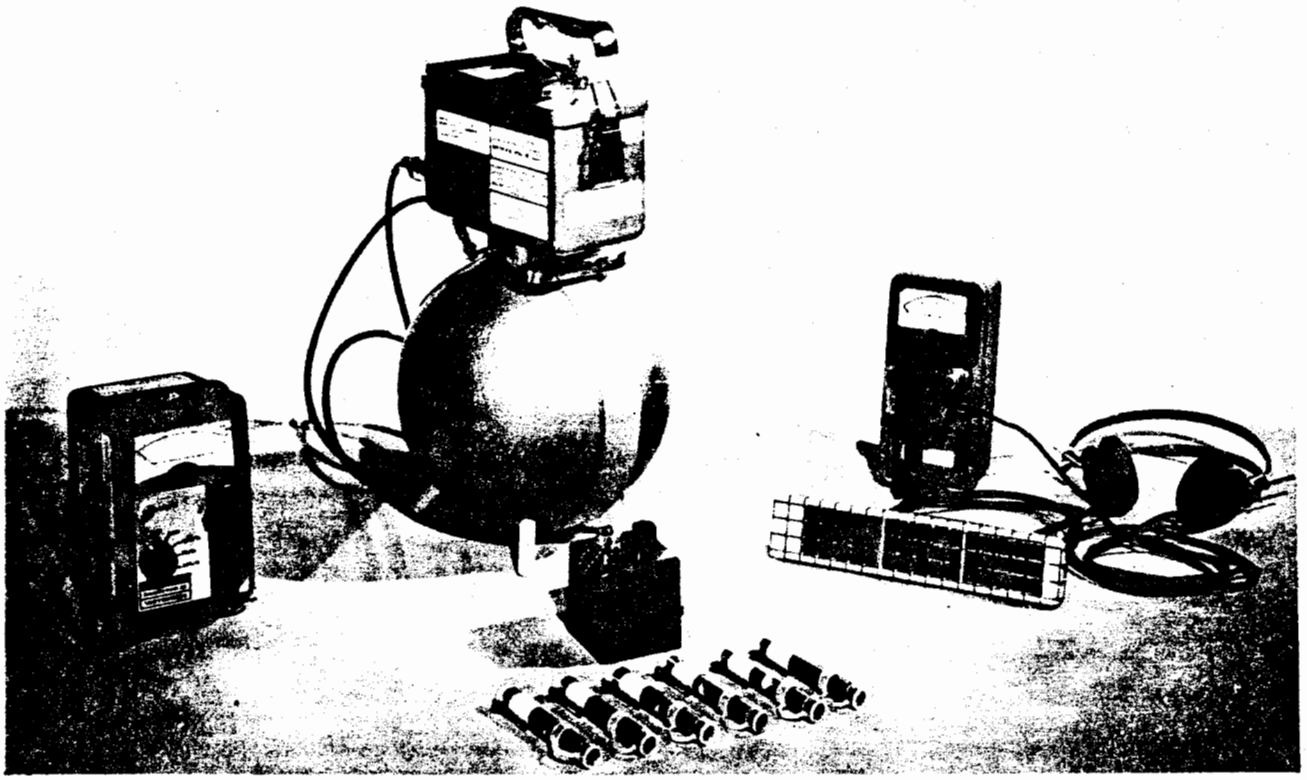

Fig. 1.
Survey instruments.

C. Passive Neutron Scan

Weapons with ^{239}Pu or massive amounts of ^{238}U provide sufficient spontaneous fission neutrons for a passive neutron scan to locate the neutron sources. Because a proton recoil detector has little response to neutrons below 500 keV, these detectors may be easily collimated using a polyethylene moderator. Pulse shape discrimination is provided for gamma-ray rejection, and useful neutron data may be taken in gamma fields of up to 2 MeV/kt.

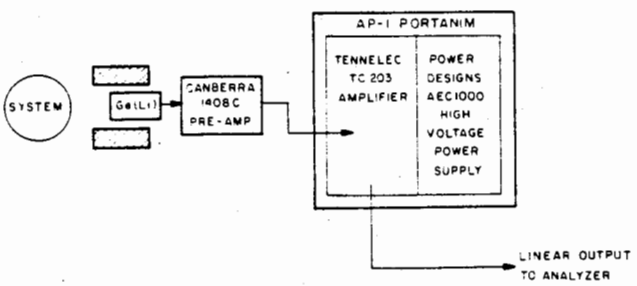

Fig. 2.
Block diagram, passive gamma-ray system.

The detected neutron count is stored in a scaler and recorded manually for a series of discrete locations spaced as for the passive gamma scan. Nominal counting times range from 100 to 400 sec. Approximately 100 runs are required for an inspection; thus, the total time required is again about 8 h.

Figures 5 and 6 show the passive neutron system consisting of a neutron detector in a polyethylene collimator and an electronics package. Figure 7 shows the polyethylene collimator in more detail. The detector normally used is a Nuclear Enterprises NE 5553B (NE 213) proton recoil pulse-shape discriminating detector. In the presence of a high (up to several R/h) gamma field in the area, a ZnS photomultplier detector could be used because of its superior gamma rejection capability. No preamplifier is required, because the output of either detector unit is of sufficient amplitude to allow direct connection to an amplifier.

To make spectrum measurements, the detector output signal is routed to the Ortec 410 amplifier operated in the double-delay-line differentiation mode, then through the Ortec 427 delay amplifier and Ortec 426 linear gate (triggered by the PSD output of the detector) to the mulichannel analyzer. If neutron counting only is desired, the PSD output is routed through the amplifier to the scaler and the neutron count is recorded in tabular form. The detector and collimator weigh 90 lb and are 3 ft^3 in volume. The main electronics package, consisting of

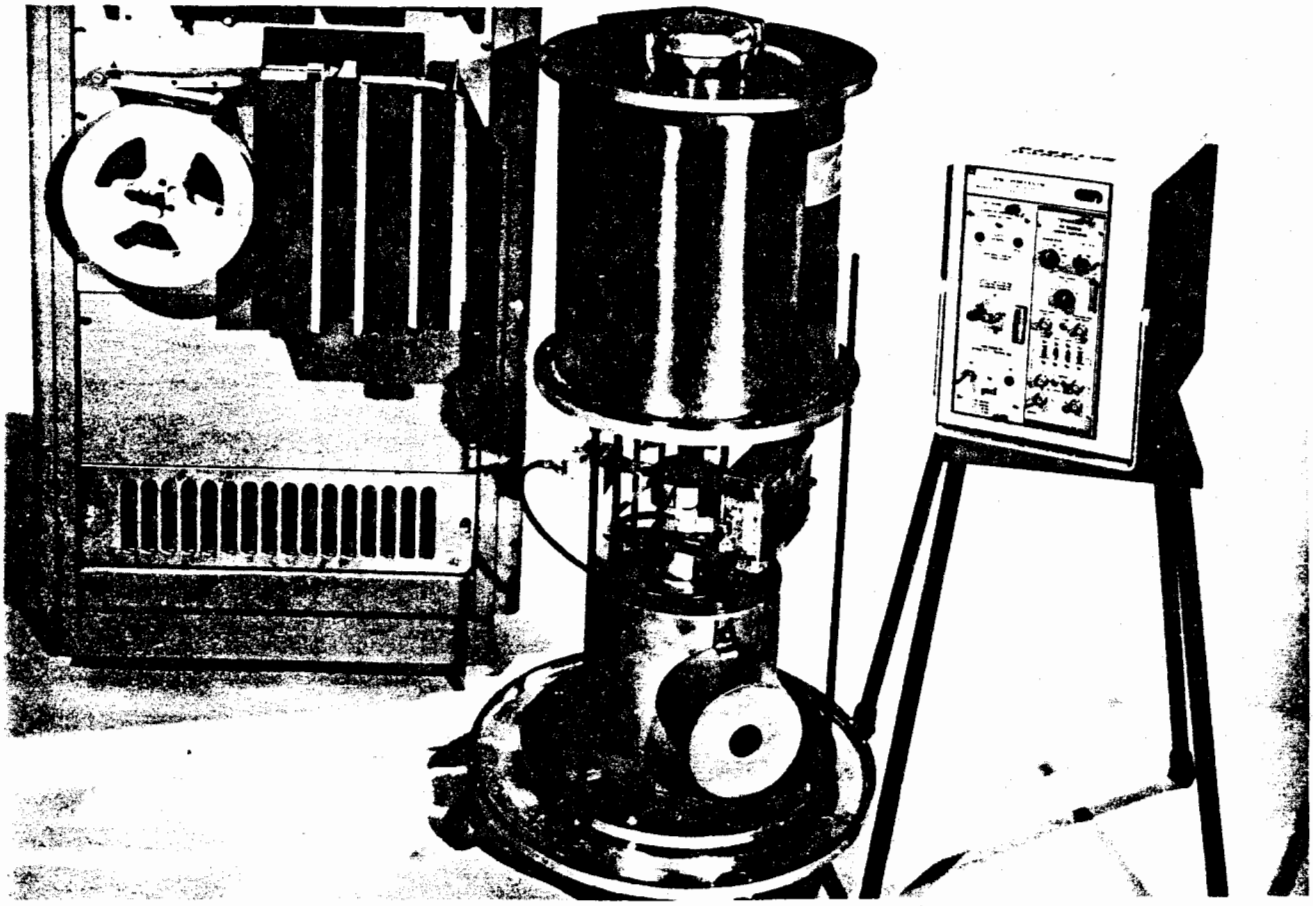

Fig. 3.
Passive gamma system.

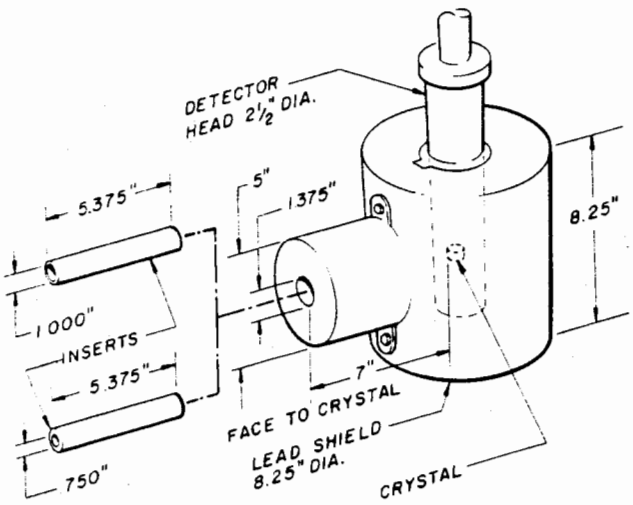

Fig. 4.
Passive gamma-ray collimator assembly.

an Ortec 410 amplifier, an Ortec 426 linear gate, an Ortec 427 delay amplifier, one Tennelec TC 562 timer, two Tennelec TC 550 scalers, and one Power Designs AEC 315B high-voltage power supply, is housed in a Hewlett-Packard 5580B NIM bin. The package weighs 65 lb and is 2.5 ft^3 in volume. Power consumption of this system is $< 200W$.

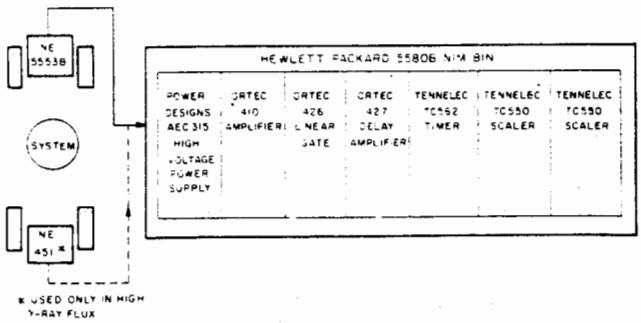

Fig. 5.
Block diagram, passive neutron system.

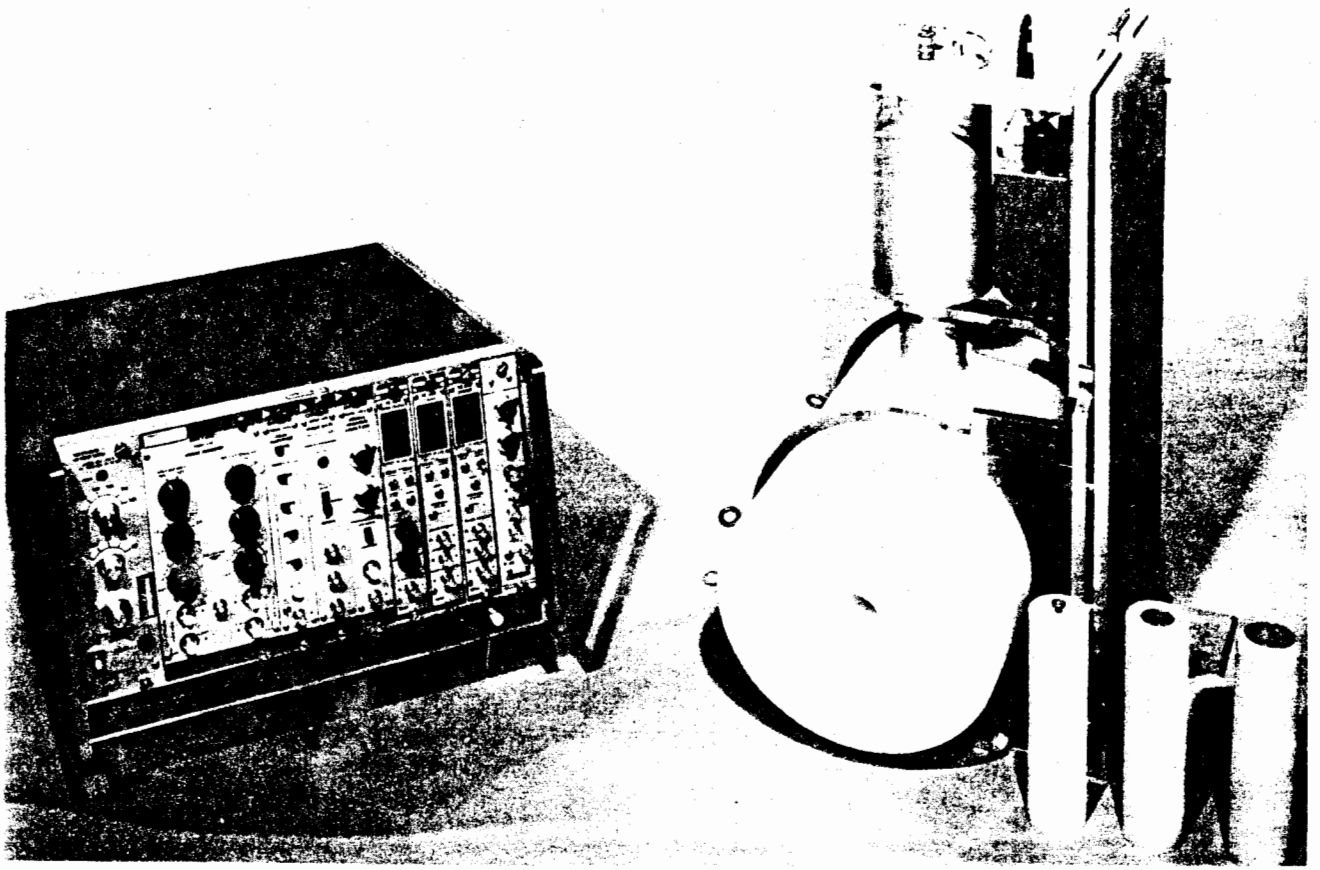

Fig. 6.
Passive neutron system.

D. Gamma-Ray Transmission

The gamma-ray transmission technique uses a detector fixed at one of a series of discrete locations and a moving gamma-ray source on the opposite side of the shroud to locate high-density regions. A single scan requires 20 to 40 min and about 10 scans are required. The required gamma-ray source strength is approximately 15 mCi of activity in the high-energy line. Any one, but only one of three sources (^{24}Na, ^{208}Tl, ^{124}Sb), may be used at the discretion of the inspector. The gamma-ray source is moved continuously during each measurement, and the detector count from the radioactive source is stored in the multichannel analyzer in the multiscale mode. Fewer than 1024 channels will be required (usually about 500), and the multichannel analyzer is read out on punched paper tape. After a series of runs, the data may be read back into the multichannel analyzer and reproduced for the host. Approximately 8 h is required for this technique.

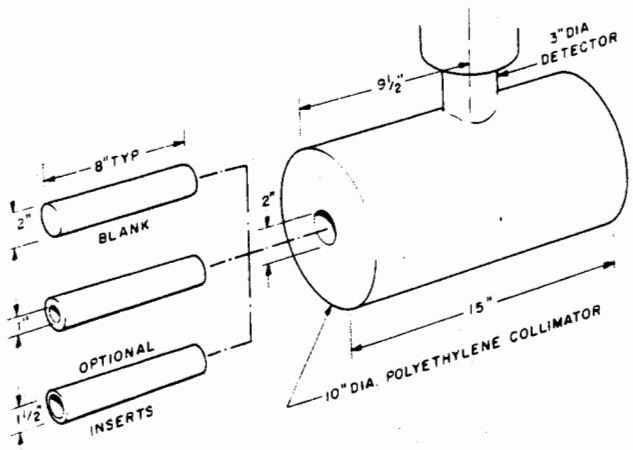

Fig. 7.
Passive neutron collimator.

Figures 8 and 9 show the gamma transmission system, which consists of the radioactive source and scanner, and the detector-electronics package. The radioactive source is moved past the system under interrogation with an appropriate mechanical scanner at a rate of 2.6 in./min. The detector remains stationary on the opposite side of the system and is an uncollimated 3 by 3 in. NaI detector with a Tennelec TC 145 preamplifier.

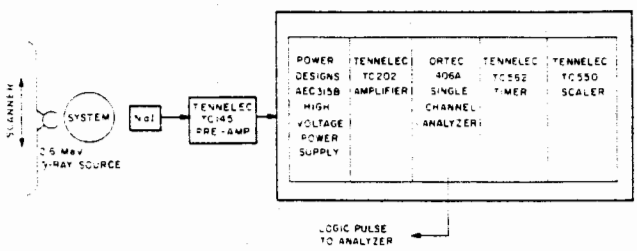

Fig. 8.
Block diagram, gamma transmission system.

The detector assembly is 19 in. long by ≈ 4½ in. diameter and weighs 10 lb.

The main electronics package consists of a Tennelec TC 202 amplifier, an Ortec 406A single-channel analyzer, a Tennelec TC 562 timer, a Tennelec TC 550 scaler, and a Power Designs AEC 315B high-voltage power supply, mounted in a Berkeley Nucleonics AP-2 Portanim. The package weighs 25 lb, is 1.3 ft^3 in volume, and may be operated adjacent to the detector or at a distance up to 40 ft. Power consumption is $<750W$ including the analyzer-calculator system. The output of the electronic package is a logic pulse from the single-channel analyzer which is routed to the Hewlett-Packard multichannel analyzer system operated in the multiscale mode for collection and analysis. Count rate information is also available at the electronics package from the TC 550 scaler. Although not shown in Fig. 8, the same linear gate and delay amplifier used in the passive neutron system are required here to set the analyzer window.

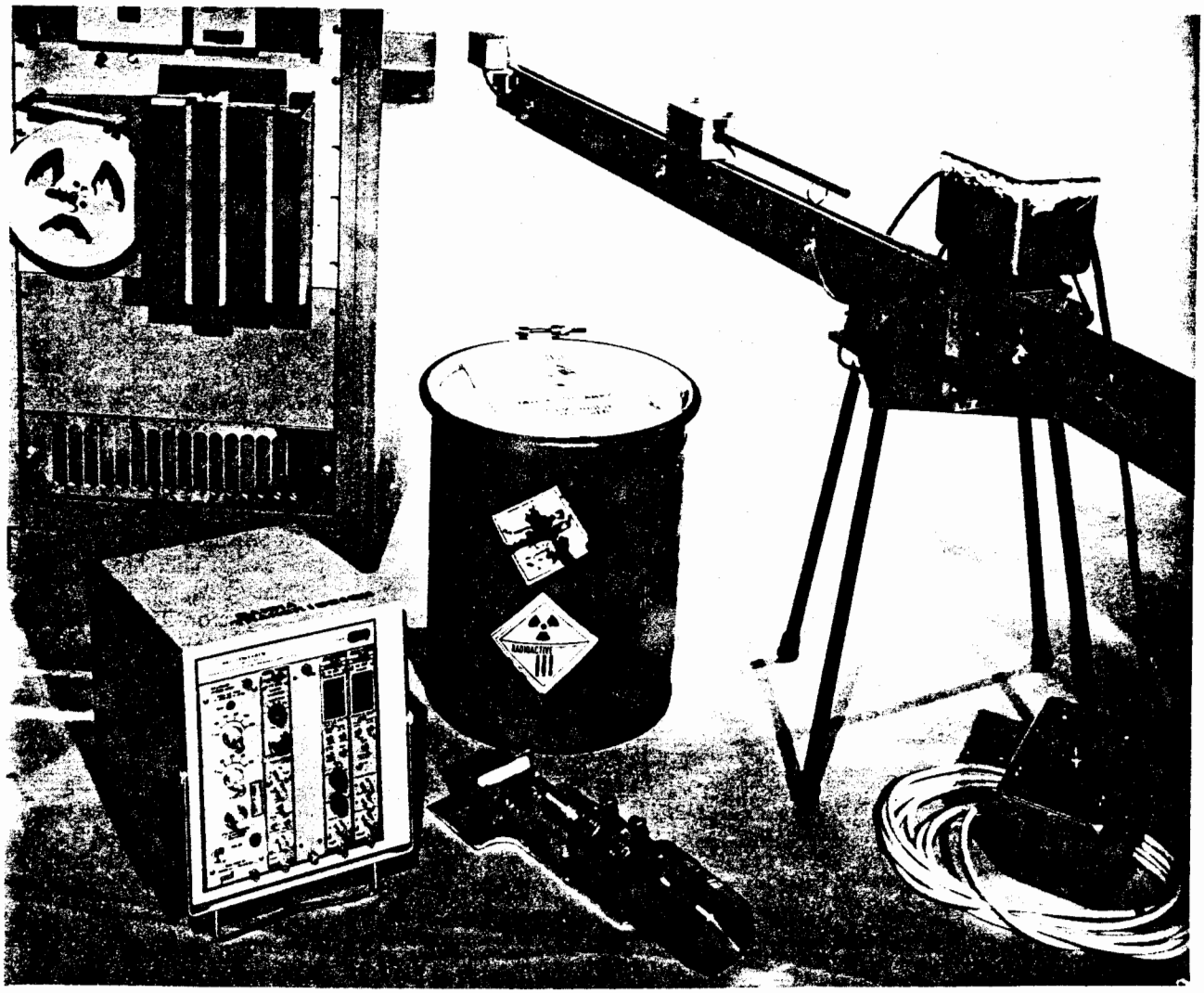

Fig. 9.
Gamma transmission system.

E. (γ,n) Activation

The (γ,n) activation technique uses 2.614-MeV gamma rays (^{208}Tl) to produce neutrons in the thermonuclear fuel (usually ^{6}LiD) by photodisintegration of the deuterium. These neutrons are then detected by a high-efficiency detector that has a relatively flat energy response. A scan is performed at a series of discrete locations, and the detector is co-located with the shielded and collimated source. Data are stored in scalers and recorded manually. Typical run times are 400 sec, and the number of runs is similar to that needed for the passive gamma or neutron scan. Thus 8 h might also be required for this technique.

Certain warheads or the nearby structure may contain beryllium which contributes to the (γ, n) response if the 2.614-MeV gamma ray is used alone. Thus the inspector has the option of using a ^{124}Sb source of comparable strength to detect and subtract out the beryllium response. The 1.69-MeV gamma from ^{124}Sb is below the D(γ, n) threshold but above the beryllium (γ, n) threshold.

Figures 10 and 11 show the equipment used in the (γ, n) experiment. The source is ≈ 250 mCi and is housed in a lead shield weighing ≈ 120 lb. The detector consists of ^{3}He tubes mounted in a polyethylene slab ≈ 3 in. thick by 24 in. tall by 20 in. wide and weighs 65 lb. Figure 12 shows source, collimator, and detector assembly. The electronics package, consisting of a Tennelec TC 202 amplifier, a Tennelec TC 562 timer, a Tennelec TC 550 scaler, and a Power Designs AEC 315B high-voltage power supply, is housed in a Berkeley Nucleonics AP-2 Portanim; it weighs 28 lb and has a volume of 1.5 ft^3. Neutron count data are taken from the scaler in tabular form. Power consumption of this system is < 60W.

F. Analyzer-Calculator System

The primary data acquisition and analysis system is a 1024-channel, single-parameter Hewlett-Packard 5401B multichannel analyzer which is interfaced with a Hewlett-Packard 9100B desktop programmable calculator with printer and plotter. Figure 13 is a block diagram of the major components, and Fig. 14 is a photograph of the components. The system is equipped with a linear and log display on the oscilloscope, a camera adapter to facilitate photographing displays for quick-look evaluation of data, and a 120 character/sec Hewlett-Packard 2753 paper tape punch. In addition, a Hewlett-Packard 2737A paper tape reader is provided to enable read-in of data taken at a rate of 300 characters/sec to ascertain that the data are good and then to enable read-out again for making duplicates.

The interface of the multichannel analyzer to the programmable calculator permits rudimentary reduction of data in the field. Programs that have less than 392 program steps may be stored on magnetic cards and taken into the field to assist the inspector in evaluating the quality of the inspection data. An example of a useful program is demonstrated by Figs. 15 and 16 which were plotted and labeled by the analyzer-calculator system. Figure 15 shows a complete gamma spectrum of a small ^{238}U sample with the 1.001-MeV gamma-ray line indicated as the peak of interest. The region of interest is shown expanded in Fig. 16. Five channels on each side of the peak were chosen for calculation of a background. The background is then subtracted from each point, and the area under the peak and the centroid of the peak are calculated. These data are recorded and would subsequently be plotted as a function of the spatial location in constructing the mosaic for an inspection.

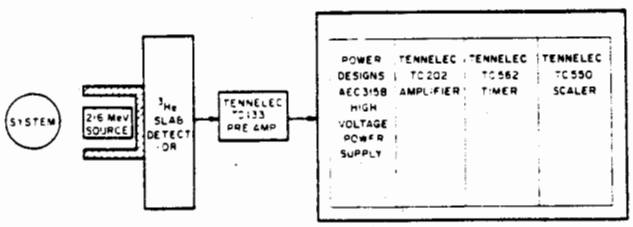

Fig. 10.
Block diagram, (γ, n) system.

G. Support and Spare Equipment

Support equipment is provided with the ACDA prototype equipment to aid in setting up and testing the various detector systems, to provide stable ac power in the field, and to aid in troubleshooting faulty equipment. This equipment is available for any of the four subsystem packages and consists of:

1. Oscilloscope, Tektronix Type 422 Model 125B
2. Precision pulser, Geos Model 2010
3. Regulator, ac power, GR Model 1571-AL
4. Dual summer-inverter, Tennelec TC 212.

Although it is beyond the scope of this project to provide complete maintenance and repair spare parts, duplicates of certain units are provided. These units are key items in the systems and are difficult to repair in the field. The spares consist of:

Quantity	Item	Model
1	single-channel analyzer	Ortec 406A
1	amplifier	Tennelec TC 203 BLR
1	high-voltage power supply	Power Designs AEC 1000
1	high-voltage power supply	Power Designs AEC 315B
1	timer	Tennelec TC 562
1	scaler	Tennelec TC 550

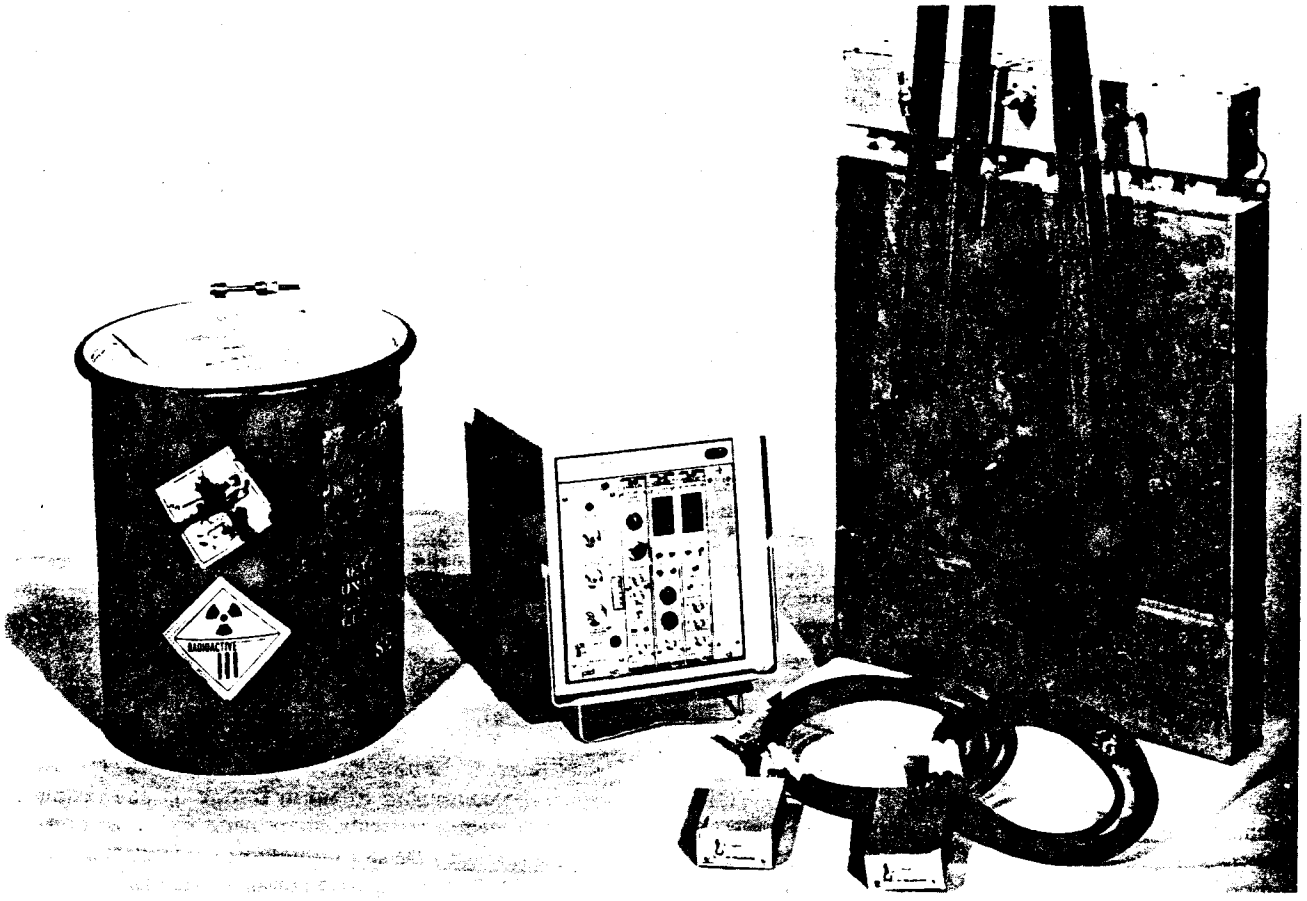

Fig. 11.
(γ, n) system.

The support and spare equipment is housed in two separate packages as shown in Fig. 17. The oscilloscope, a self-contained, battery-operated unit, weighs 25 lb and is 0.7 ft^3 in volume. It is equipped with probes for troubleshooting, and has power cards for ac operation, battery charging, and dc operation from an outside battery. Five hours of use is available from the battery pack which then requires 16 h of charging to restore full capability.

The ac power regulator is housed in a cabinet 12 in. high, 18 in. deep, and 20 in. wide; it weighs ≈ 75 lb. This unit is a motor-driven, Variac-controlled regulator used in the field to regulate the ac power from a motor generator set.

The spare modules mentioned above are housed in a spare Hewlett-Packard 5580B NIM bin with the precision pulser used in setting up various systems. The dual summer-inverters, also housed in the spare bin, are floating input, differential amplifiers used to provide common-mode rejection of unwanted hum or noise on signal lines.

H. General Comments

1. Calibration and Equipment Checks. The purpose of this section is to point out a few important checks that are performed on the equipment prior to use to avoid the collection of questionable data.

The electronics and detectors, being commercial laboratory equipment, may be subject to microphonics and electrical noise. A check of the detector pulses on an oscilloscope will indicate whether there are any severe noise problems.

The gamma-ray energies of interest for the passive gamma-ray technique range from approximately 100 keV to 3 MeV. Therefore, calibration sources (such as ^{109}Cd and ^{228}Th + daughters) are used to ensure that the amplifier gain is properly set and that the zero intercept and level discriminators on the multichannel analyzer are properly set to detect gamma rays in the energy region of interest.

Prior to taking a passive neutron scan, the gamma-ray rejection circuit is checked by using small gamma-ray

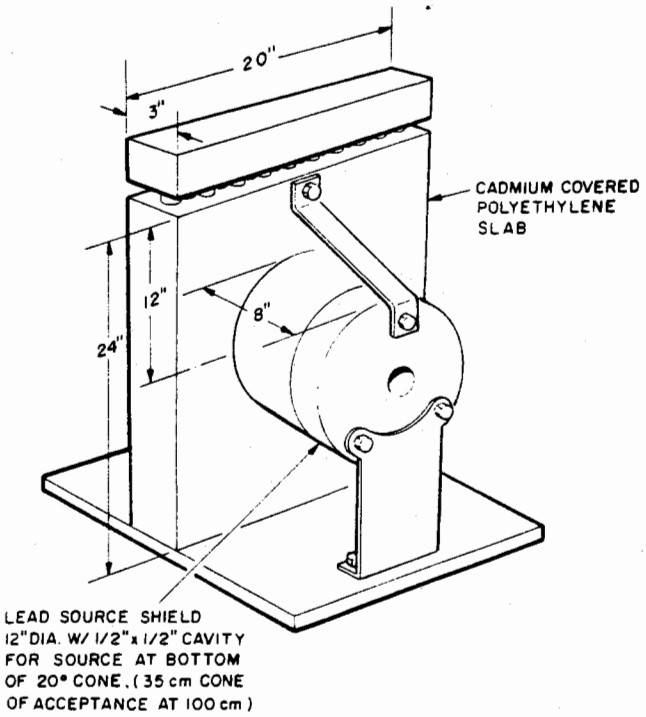

Fig. 12.
(γ, n) slab detector with source shield.

and neutron calibration sources in conjunction with the multichannel pulse height analyzer. Neutron only and neutron plus gamma-ray spectra are collected in the multichannel analyzer and compared. The pulse-height bias level for neutrons is also checked.

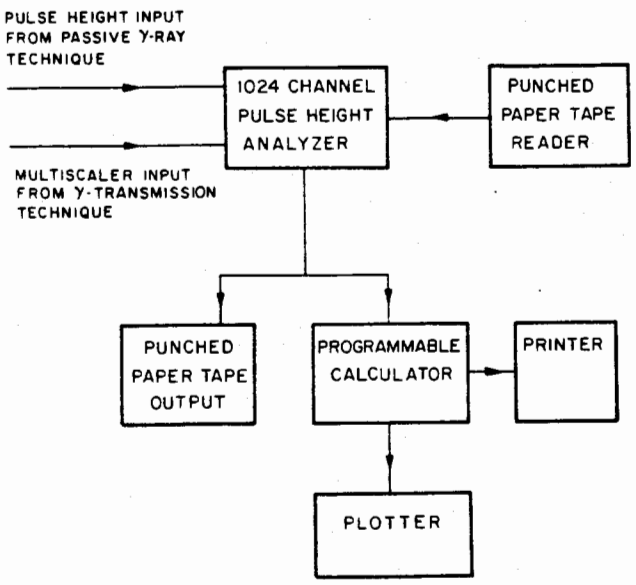

Fig. 13.
Block diagram, analyzer-calculator system.

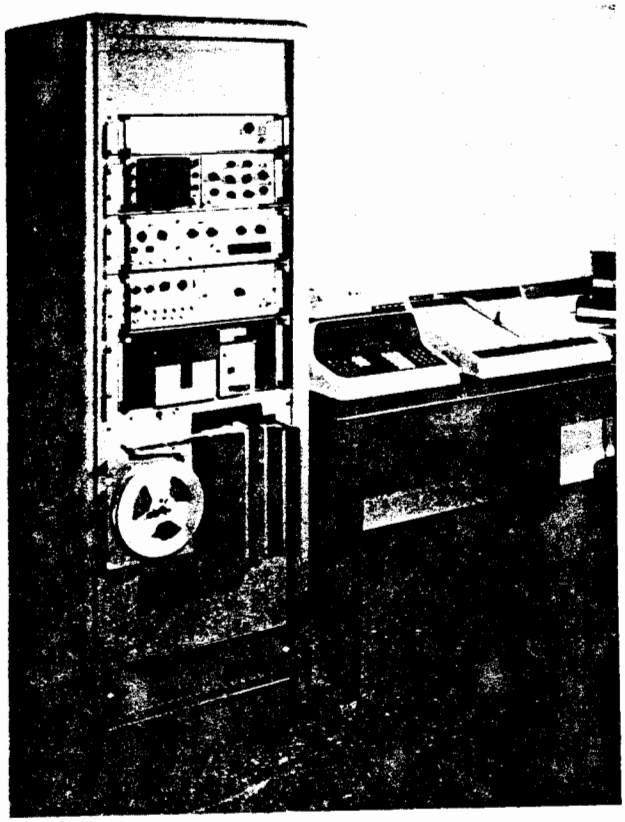

Fig. 14.
Analyzer system.

The gamma-ray transmission technique utilizes a gamma-ray source of sufficient strength that certain precautions are necessary. If the NaI detector is placed too close to the source with the high voltage applied to the photomultiplier tube, sufficient gain shift may occur

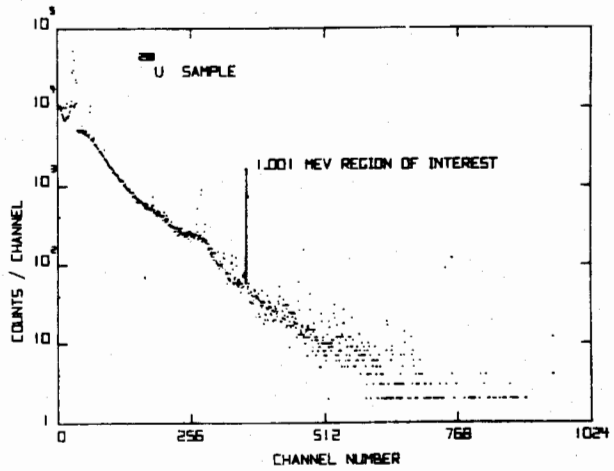

Fig. 15.
^{238}U small-sample gamma spectrum plotted with analyzer-calculator system.

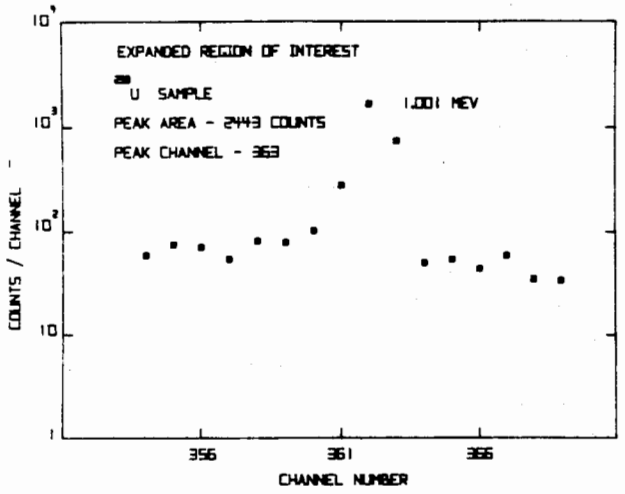

Fig. 16.
Expanded region of interest for spectrum of Fig. 15.

in the photomultiplier tube to cause the detected gamma-ray peak to shift partially or completely out of the single-channel analyzer window. Thus, the window setting is checked before and after use. A background is taken at each NaI position without the gamma-ray source in position. Also, the source is positioned in direct view of the NaI detector at the start of a scan to provide zero attentuation data.

For the (γ, n) technique, the amplifier gain and discriminator level on the scalers used with the ^{3}He detectors is checked to be sure that the detectors are counting essentially only neutrons.

The analyzer-calculator system is checked with a diagnostic paper tape and diagnostic programs for the calculator, printer, and plotter and for the multichannel analyzer-calculator interface.

2. Deployment of Prototype Equipment. In addition to the ACDA prototype equipment shown in Figs. 1, 3, 6, 9, 11, 14, and 17, other necessary elements of the inspection system are the appropriate positioning hardware for the silo or assembly bay, tools and miscellaneous supplies, an equipment shelter or transport vehicle, and a power source. In various combinations, these elements have been deployed by LASL in four separate field operations during the development of the system.

The first two trips were to the AEC Pantex Plant at Amarillo, Texas, to examine individual weapons systems. On these trips the equipment was transported from LASL to Pantex in an equipment shelter mounted on a 3/4-ton pickup truck. Because these two trips were experimental, some of the hardware required in a "real" inspection was not needed. The third trip was to the Navy's Polaris Missile Facility Atlantic (POMFLANT) at Charleston, South Carolina, to examine a Polaris A-3 in a maintenance

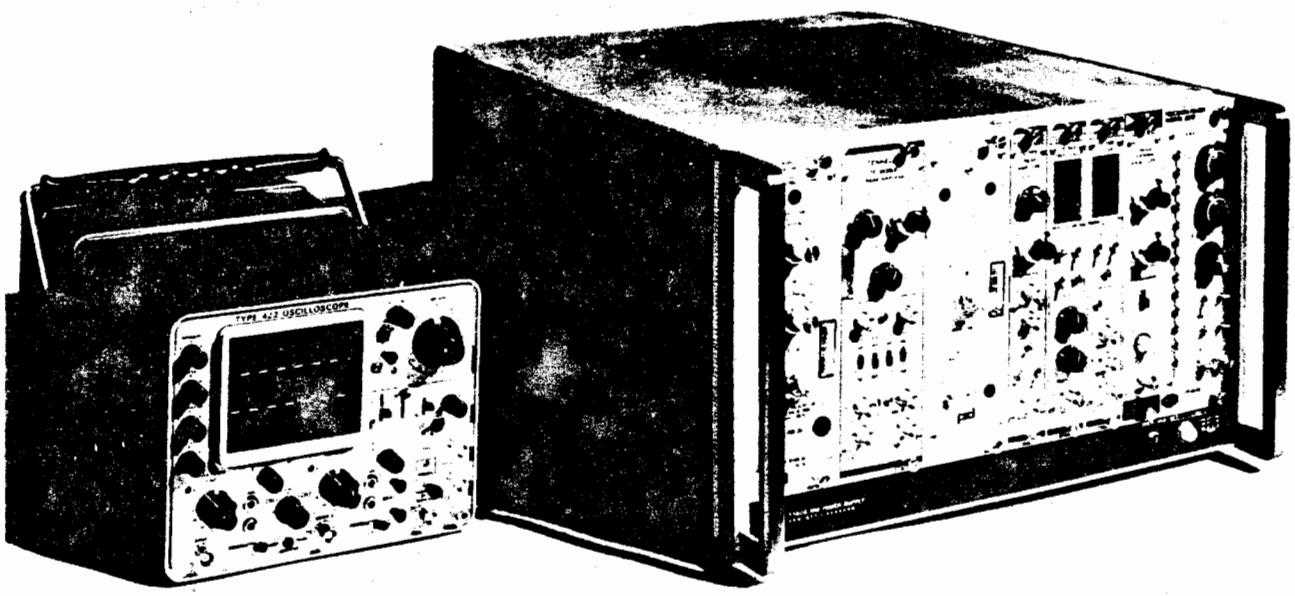

Fig. 17.
Support and spare equipment.

facility. Here again some specialized equipment was not needed. To reduce the travel time from LASL to POMFLANT, the equipment (3200 lb) was flown to Charleston in an AEC C-47. The fourth trip was to Minot AFB, North Dakota, to examine the Minuteman III in both assembly bay and silo configurations. Due to the short time the systems were available, the remoteness of the site, and the developmental nature of the tests, extra equipment was needed. This included large hoists (450 lb each) for the assembly bay and an extra analyzer (450 lb). A 4500-lb load of equipment was flown to Minot AFB in an AEC C-54 and the truck and motor-generator set were shipped via commercial carrier.

Without development test requirements, the existing prototype equipment could be deployed either of two ways. If driving time were not a major factor, one pickup truck with equipment shelter and electronics plus a small van carrying the miscellaneous hardware and towing a motor generator could support the entire operation. If distance were a problem, some combination of air freight and motor freight could be used. The weight of the equipment is estimated to be ≈ 3750 lb, including hardware, tools, spare LN_2, and shields and source containers but not including trucks, shelters, or motor-generator set. Care in handling during shipment is mandatory. The equipment is high-quality, commercial grade laboratory equipment but will not stand the rough handling that a future ruggedized system might be exposed to.

III. Experimental and Theoretical Results

A large part of the experimental development of the prototype inspection system was done by examining U.S. nuclear weapons, either as isolated units or as complete systems. The relevant characteristics of these units as related to the detection techniques described previously are summarized in Table I.

The limited time scale precluded on-site, full-system testing on two of the prescribed strategic systems, the Titan II and Poseidon. However, tests were conducted on the warheads for both of these at the AEC assembly plant. The availability of other weapons at Pantex also allowed some tests on units of interest but not directly related to strategic missile systems.

A. Passive Gamma Technique

1. Gamma Emission from Weapon Materials. The gamma emission properties of weapons materials have been discussed in some detail in the Phase I report of the FT-25 program. Here we will mention only the prominent lines that are commonly used as signatures.

Oralloy can also be characterized by a 2614-keV gamma from ^{208}Tl, a ^{232}U daughter. The small amount of ^{232}U in oralloy (≈ 1 part in 10^{10}) arises in material that

TABLE I

WEAPON DESIGN CHARACTERISTICS

2. **W59.** Extensive spectra were taken at LASL with both NaI (3 by 3 in.) and Ge(Li) detectors of a W59 containing nuclear material but mock HE. The purpose was to investigate the output of a weapon under readily controlled conditions to (a) determine analyzer size, (b) determine the counting times to obtain reasonable spectra, (c) evaluate the intrusiveness, and (d) understand the origin of all the gamma lines observed.

If the shape of the relative efficiency curve for the detector is known, and the relative intensities of two gamma lines with known absolute or relative disintegration rates are measured, then the integrated μx of the intervening material is obtained.

Close study of the data on the W59 led to the identification of all lines observed in the Ge(Li) spectra taken under moderate resolution conditions and with fairly long counting times ($\approx$ 1 h).

The NaI data yielded no surprises and, indeed, NaI would be an adequate passive gamma detector for many of the systems examined. For this application the advantages of NaI over Ge(Li) are obvious; NaI has higher efficiency, is easier to handle, is more rugged, and does not require cooling. Also, NaI will not distinguish weak lines because the poor resolution spreads a few counts over too many channels.

There is nothing to prevent using the baseline offset feature with the 8192 channel ADC to obtain high-resolution ($\sim$ 0.35 keV/channel) Ge(Li) spectra in the 200-keV energy region, where the detector resolution is probably $\simeq$ 1.5 keV.

3. **Pantex Passive Gamma Data.** Both NaI and Ge(Li) detectors were used with a 2048-channel analyzer during a field trip to the AEC Pantex Plant at Amarillo, Texas, at the end of July 1970. Typical run times for the Ge(Li) detector were 1000 sec, which is equivalent to a 500-sec run time with a 1024-channel analyzer for the same statistical uncertainty per channel. The detector was shielded but was not tightly collimated, since it was placed in a 3-in.-diam hole 4 in. behind the front face of the cylindrical shield. Source-to-detector distances were reasonably close to what would be expected in an actual inspection. The energies of prominent gamma lines are given in keV on all spectrum plots. The decaying nuclide is also shown and the parent isotope, if different, is

indicated in parentheses.

W53. Some time was spent examining the W53

Zero-attenuation source-strength ratios were obtained from laboratory spectra The relative source strengths were obtained by integrating the detector counts under the peaks, the value being obtained by summing several of the peaks in the complex (the specific peaks are not important for this example). The fact that these numbers also contain a detector efficiency factor is not important, because the interest lies in how these relative source strengths change with source and absorber thickness. The thin-sample measurements are given in the top line of Table II.

TABLE II

RELATIVE INTENSITY–^{238}U LINES

System	Layer Thickness (cm)	
	A	B
	Thin	0
	0.10	0.05
	2.50	2.00
	0.10	0.05
	2.50	2.00
	0.10	0.05
	2.50	2.00
	0.10	0.05
	2.50	2.00

W62. A spectrum with wide collimation (as discussed previously) taken in the channel region of the W62 (Minuteman III) is shown in Fig. 20.

Fig. 19.
7/27/70 Run 2. W53 at secondary. Detector 49-5/8 in. from centerline of warhead. Run time = 1000 sec.

Fig. 20.
7/27/70 Run 4. W62 in channel with wide collimator. Detector 32-1/2 in. from centerline of warhead. Run time = 1000 sec.

W68. The spectrum from the W68 (Poseidon C-3) is shown in Fig. 21.

W56. The spectrum shown from the primary region of the W56 in Fig. 22 is strikingly different. Figure 23 strikingly shows the advantage of Ge(Li) over an NaI spectrum (Fig. 24) taken at the same location.

In Fig. 25, the spectrum from the primary region of a Mk 43-Y1 is shown.

Mk 28-Y3 and Mk 43-Y1. The weapon spectra shown for the Mk 28-Y3 and the Mk 43-Y1 (Figures 23, 24, and 25), although not from U.S. strategic missile systems,

4. POMFLANT Passive Gamma Data. The LASL trip to POMFLANT in August 1970 was the second visit to that facility under the ACDA FT-25 program; the Naval Research Laboratory (NRL) had made passive gamma measurements at POMFLANT in April 1970.

Figure 26 is a schematic of the geometry for both the LASL and the NRL passive gamma scans on the Polaris A-3. The missile was horizontal with its axis about 55 in. above the floor. In the NRL case the linear scan was made with the front face of the 1 by 4 in. collimator

Fig. 21.
7/27/70 Run 15. W68 at primary. Detector 34 in. from centerline of warhead. Run time = 1000 sec.

Fig. 22.
7/27/70 Run 13. W56 at primary. Detector 44 in. from centerline of warhead. Run time = 1000 sec.

27 in. from the axis of the Polaris A-3 at the primary location. The scan started 6 cm above the axis of the Polaris A-3 and went to 42 cm below the axis. The NRL Ge(Li) spectra were taken in 512 channels spanning the energy range from 0 to 2.6+MeV, too few channels to take full advantage of the high-resolution detector. In scans of this type, points are generally obtained from each spectrum by summing the counts under specific peaks (indicated by their energies in keV) and subtracting the Compton continuum background.

Three examples are shown in Fig. 27.

Fig. 23.
7/27/70 Run 10. Mk 28-Y3 at primary. Detector 28 in. from centerline of weapon. Run time = 1000 sec.

Fig. 26.
Schematic of linear passive gamma scans on Polaris A-3. Warhead positions at the primary elevation are

Fig. 25.
7/27/70 Run 16. Mk 43-Y1 at primary. Detector 31-1/2 in. from centerline of weapon. Run time = 1000 sec.

Fig. 27.
NRL passive gamma scan at primary section of Polaris A-3 Ge(Li) detector ≈ 31 in. from axis of A-3. Linear scan with collimation 1 by 4 in. Run time = 240 sec.

LASL passive gamma scans at primary section of Polaris A-3. Ge(Li) detector ≈ 55 in. from axis of Polaris A-3. Linear scan with collimation 1 by 4 in. Run time = 400 sec.

In Fig. 29, an axial scan of the Polaris A-3 is shown.

Fig. 29.
LASL axial passive gamma scan of Polaris A-3. Ge(Li) detector ≈ 55 in. from axis of Polaris A-3. Collimation 1 by 4 in. Run time = 400 sec.

Examples of the Ge(Li) pulse-height spectra from which the LASL scan data were derived are shown in Figs. 30 and 31. These spectra were taken in 1024 channels, identical to those that would be taken with the ACDA analyzer. The spectrum from the primary of the W58 (Fig. 30) can be compared to that taken on the W56 (Fig. 22) to illustrate the effect of going from 2048 to 1024 channels. Note that the entire spectrum such as displayed in Figs. 30 and 31 is accumulated at each scan point. Thus any or all of the lines visible in the spectrum can be used for analysis.

5. Minot Passive Gamma Data. At Minot AFB, North Dakota, data were taken on the Minuteman III system with three W62 warheads. Measurements were made in an assembly bay, and some of the same measurements were duplicated in an actual inspection in an operational silo. The general configuration for the measurements is shown in Fig. 32.

Axial scan results are illustrated in Fig. 33.

Fig. 30.
9/28/70 Run 8. Polaris A-3, W58 warhead at primary location. Detector 55 in. from axis of Polaris A-3 with 1 by 4 in. collimation. Run time = 400 sec.

Fig. 31.
9/28/70 Run 12. Polaris A-3, W58 warhead at secondary location. Detector 55 in. from axis of Polaris A-3 with 1 by 4 in. collimation. Run time = .400 sec.

Excellent circular scan data obtained in the assembly bay measurements are shown in Fig. 34.

The solid lines in Fig. 34 are meant to guide the eye only and do not represent any calculated or theoretical result.

The circular scan data taken in an operational silo are shown in Fig. 35. Although the silo scan covered only 130°, it is apparent that the data generally reproduce the results obtained in the assembly bay. The arbitrary origins for the angular scales are different in the two sets of data,

Fig. 32.
Schematic layout of Minuteman III warhead system.

Fig. 33.
Axial passive gamma scan of Minuteman III, W62 MRV. Ge(Li) detector 46-1/8 in. from axis of missile, collimation 1 by 5-3/8 in. Run time = 200 sec.

Fig. 34.
Circular passive gamma scan at primary section of Minuteman III, W62 MRV in assembly bay. Ge(Li) detector 46 in. from center of reentry system with 3/4 by 5-3/8 in. collimation. Run time = 200 sec.

B. Passive Neutron Technique

1. Detector and Collimator Development. The quality of multiple warhead measurements with collimated fast neutron detectors depends on the collimator used. To determine a proper collimator to go with the PRD, response functions were measured for a variety of polyethylene (CH_2) collimators. Previous experience indicated a 2-in.-diam by 2-in.-long PRD would have adequate sensitivity and could also be easily collimated.

Fig. 35.
Circular passive gamma scan at primary elevation of Minuteman III, W62 MRV in an operational silo. Ge(Li) detector 41-1/2 in. from center of reentry system with 3/4 by 5-3/8 in. collimation. Run time = 200 sec.

but the two sets can be overlapped by matching up the major lobe at 175° in the silo data with any of the major lobes observed in the assembly bay runs. Scans at 10° increments were not done at the secondary location because of time limitations. However, spectra taken at locations corresponding to a major lobe, minor lobe, and minimum verified the count rates observed

[redacted]

Fig. 36.
Linear passive gamma scan at primary elevation of Minuteman III, W62 MRV. Ge(Li) detector 46 in. from axis of reentry system at tangent point. Collimation 3/4 by 5-3/8 in. Run time = 200 sec.

Measurements were made with a small PuLiF neutron source of average energy of 1.3 MeV. Figure 37 shows, as an example, the measured response function data for the 2 by 8 in. collimator at 50 cm together with a calculated response function. The close agreement is obvious, and any desired collimator response at any given source-to-detector distance can be calculated with confidence.

The basic collimator size of 2 by 8 in. is adequate for most purposes. For a typical multiple warhead-to-detector separation of 80 cm, the collimator full width at half-maximum (FWHM) is about 20 cm, [redacted] For greatly different situations, of course, a different collimator could be required. The narrowest collimation provided is one-half that described above.

2. Weapon System Measurements. Collimated PRD measurements were done on a large variety of weapons systems. During the first trip to Pantex, absolute count rates were taken on the W53, W56, W68, W62, and Mk 28 weapons. Scans using a 2-3/8-in.-diam by 5-in.-long CH_2 collimator indicated the need for better spatial resolution for the system and provided the impetus for the collimator response function work discussed above. Two examples of these first scans are presented. Figure 38 shows a scan of the Mk 28 at the centerline of the primary perpendicular to the axis of the system. The PRD was 61 cm from the axis at the point of closest approach. Figure 39 shows a similar scan on the W68 system at a minimum separation of 65 cm. These two scans represent count rate variants found [redacted] The indicated FWHM for both scans are nearly the same, 45 and 43 cm, respectively, because the large collimator opening is the controlling factor.

For the second Pantex trip, a 2-in.-diam by 8-in.-long CH_2 collimator was used. Also, the PRD axis was changed to be perpendicular to the collimator axis to reduce the radial dimensions of the system. This resulted in a small ($\leq$ 20%) reduction in neutron detection efficiency. A so-called "mock Mk 28 MRV" system was scanned circumferentially with the revised detector. A schematic layout of the mock MRV is shown in Fig. 40. Three Mk 28s were placed on end, as close together as external dimensions would allow. Figure 41 shows the results of the circumferential scan at the elevation of the primaries. The three-warhead pattern is obvious, although the maximum net count rate in the PRD was only [redacted] counts/sec. The neutron background for these measurements was 0.5 counts/sec and each data point was counted for 400 sec. Data were taken at 10° increments and the total elapsed time for the measurement was about 6 h.

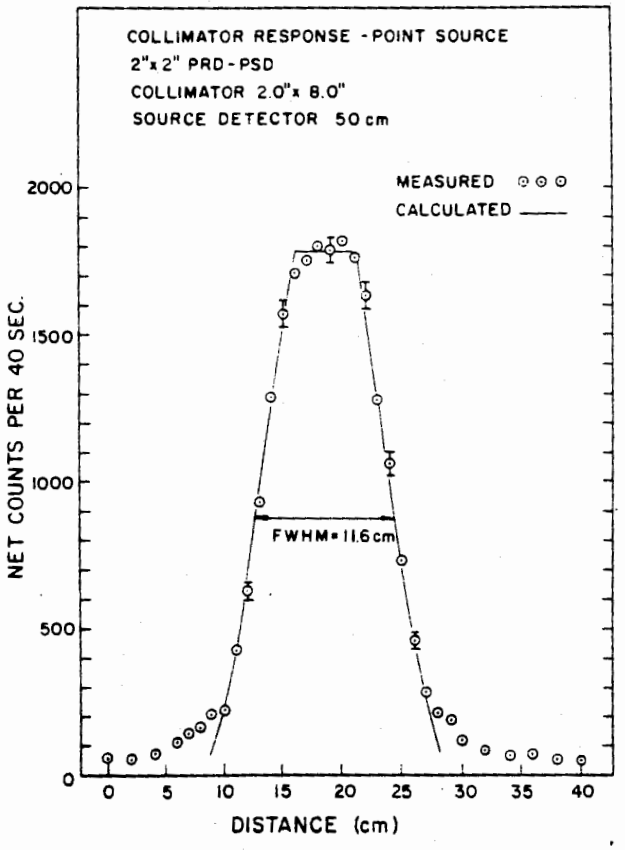

Fig. 37.
Measured and calculated collimator response function for 2 by 8 in. collimator, source at 50 cm.

Fig. 38.
PRD-PSD scan (vertical), 2-3/8 by 5 in. collimator scan of Mk 28.

Fig. 39.
PRD-PSD scan (vertical), 2-3/8 by 5 in. collimator scan of W68.

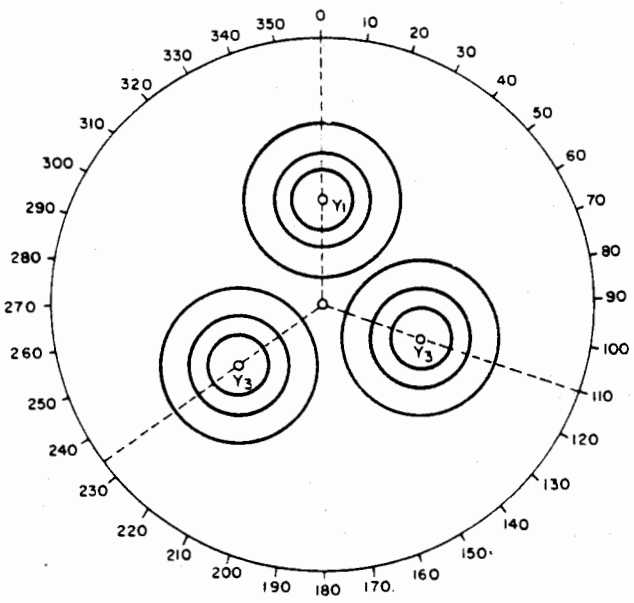

Mk 28 MOCK MRV SCHEMATIC

OUTER CIRCLE IS PRD SCAN POSITION
(90 cm TO MOCK MRV ℄)

Fig. 40.
Schematic layout of Mk 28 mock MRV.

Fig. 41.
2 by 8 in. collimator circumferential scan of Mk 28 mock MRV.

This same basic equipment was taken to POMFLANT for an inspection of the Polaris A-3 multiple warhead system. The basic geometry for these measurements was as shown in Fig. 26 for the passive gamma scans except that the minimum detector-to-centerline separation was 38 in. on the doublet (Scan A) side and 44 in. on the singlet (Scan B) side.

In a scan along the axis, essentially only neutrons from a single warhead are detected. The FWHM so obtained (30 cm) was the expected response of the system. Figure 42 shows a linear scan perpendicular to the missile axis on the doublet side at the primary centerline. This scan senses neutrons principally from the two closest warheads; thus there are two apparent peaks.

Figure 43 shows the corresponding singlet-side scan perpendicular to the missile axis at the primary position. For this scan no obvious peaks corresponding to the two far warheads appear.

For the POMFLANT

measurements, the length of individual runs was 200 sec. Maximum net count rate was and average background was about Measurements were taken with a 2 by 8 in. CH_2 plug in the collimator to determine the background, which varied somewhat around the warhead.

For the final field trip to Minot AFB, the same basic 2 by 8 in. collimator system was used. However, some measurements were taken with a 1.5 by 8 in. collimator insert. To demonstrate collimation effects for comparison with the POMFLANT data, some linear scans were taken as well as the circumferential scans. The basic experimental disposition was as shown in Fig. 32. For an axial scan at 355° (not shown), a small improvement in FWHM was observed (21 cm compared to 23 cm) for the 1.5 by 8 in. collimator. The maximum net count rate dropped A 1.0 by 8 in. collimator was also tried but the net count rate was too low to justify its use for scans. An average background of about was observed.

Figure 44 shows the results of linear scans done tangentially at the 236.5° position with both collimators. This essentially reproduces the singlet-side geometry of the POMFLANT measurements.

Fig. 42.
Linear scan of Polaris A-3 on doublet side, 2 by 8 in. collimation.

The circumferential scan of the Minuteman III warhead made in the AS&I building is shown in Fig. 45.

The final Minuteman III measurements at Minot were taken in an operational silo with the basic 2 by 8 in. collimation system. The warhead-to-detector distance was about 1.5 in. greater for the silo data than for the AS&I data. The primary position was verified by a few axial measurements done at 180° (adjacent to warhead B). Circumferential data were then taken at primary height over an angular range of 136°. The data are shown in Fig. 46 and verify the more complete data of Fig. 45.

Fig. 43.
Linear scan of Polaris A-3 on singlet side, 2 by 8 in. collimation.

Fig. 44.
Linear scan (1.5 by 8 in. and 2.0 by 8 in.) of Minuteman III on singlet side.

Fig. 45.
Circumferential scan of Minuteman III in AS&I building.

Fig. 46.
Circumferential scan of Minuteman III in operational silo.

Table III summarizes the collimated count rate data for the 2 by 2 in. PRD for several systems under a variety of conditions. The observed and scaled count rates cover two orders of magnitude. At least some scan data were taken on all the systems listed.

TABLE III

COLLIMATED 2 BY 2 IN. PRD COUNT RATES FOR VARIOUS WEAPONS SYSTEMS

System	Pu Mass (kg)	HE Thickness (in.)	Source-to-Detector Distance (cm)	Collimator Used	Net (Counts/sec)	Scaled Net (count/sec) for 2 by 8 in. Collimator at 78 cm

3. Neutron Spectra from Plutonium Primaries. The utility of neutron spectral measurements was investigated during the development of the passive neutron technique. Although the results were not significant to the MRV problem in the end, they are reported here for completeness.

Fig. 47.
Calculated spontaneous fission neutron spectrum from W62 (Mk 12) primary at outer surface of reentry vehicle.

This result indicates that a passive neutron spectral determination is not intrusive with respect to determination of RV design details, because small changes in spectral shape or magnitude (even if detectable by the measured spectral data) are not absolute changes that can be compared with a known reference design.

For comparison of the calculations with experiments, the proton recoil pulse-height distribution due to neutrons incident on an NE 213 liquid organic scintillator was measured for the neutron spectra emitted from a Mk 43 primary and a W62 primary. Both measurements were made at the Pantex Plant, Amarillo, Texas.

Fig. 48.
Calculated composite neutron spectrum from W62 (Mk 12) primary at outer surface of reentry vehicle.

Fig. 49.
Measured proton recoil pulse height distribution corresponding to neutron spectrum from Mk 43 primary.

Fig. 50.
Measured proton recoil pulse height distribution corresponding to neutron spectrum from W62 (Mk 12) primary.

The preceding sections discussed the effect of pit and RV design parameters on the neutron spectrum from plutonium primaries. As a separate but related problem, the effect of HE thickness on the emitted neutron spectrum was considered independently of other weapon design parameters.

. The MCN Monte Carlo program was used to calculate the neutron spectrum with 10^5 neutron histories. Figure 51 shows the calculated spectra at 25 cm

To verify the calculations, the proton recoil pulse-height distribution was measured

The pulse-height distributions for the bare pit and with mock

Fig. 51.
Calculated neutron spectrum from ^{240}Pu spontaneous fission source surrounded by HE.

HE are shown in Figs. 52 and 53, respectively. Each measurement was made with an uncollimated NE213 detector 100 cm from the center of the pit and with a

Fig. 52.
Measured proton recoil pulse height distribution corresponding to neutron spectrum from bare pit.

Fig. 53.
Measured proton recoil pulse height distribution corresponding to neutron spectrum from pit surrounded by 4 in. of mock HE.

2000-sec counting time. As expected, the shape of the pulse-height distribution with mock HE is similar to that for the bare pit, and the main result of surrounding the pit with mock HE is a decrease in count rate over the entire energy range.

C. Gamma Transmission Technique

1. **Source and Detector.** To sense the presence of high mass regions, the source should be of sufficiently high energy to penetrate a significant thickness of material.

A suitable radioactive gamma source should have an appreciable percentage of the decay gammas at high energy, and a majority of the high-energy gammas should be at a single well-defined energy. During this work, a ^{232}U source was found to be convenient because of the pronounced monoenergetic 2.614-MeV gamma from the decay of the ^{208}Tl daughter nucleus. The particular source used has about 15 mCi of 2.614-MeV activity in a

TABLE IV

total of 42 mCi. One objection to this source is that the same energy gamma is emitted by some weapon components. However, it would require approximately 400 kg of thorium, for example, to provide the same intensity gamma-ray source. Such a large amount of thorium is unlikely.

Because the detector is fixed for each scan, the background introduced by the system under inspection can be accurately measured and subtracted from the response caused by the external source. Naturally, some loss in accuracy results from counting statistics.

Scattered gamma rays are degraded in energy. Therefore, if the source consists of a single high-energy gamma ray, and if the detector has adequate energy resolution, scattered events are rejected. The dynamic range of the technique is simply the gamma-ray attenuation factor, which can be detected above background. With a NaI detector, a dynamic range of 1000 is routinely observed, which is the attenuation introduced by about 3 in. of uranium. A Ge(Li) gamma detector possesses higher resolution, and as a result a larger dynamic range is possible. However, the gamma detection efficiency is low. Thus, if observation time is limited, the increased efficiency of a NaI detector is desirable even at the expense of poorer energy resolution.

The overall spatial resolution is not precise and is controlled in part by the physical size of both the source and detector and in part by the scan rate. Since the data are taken essentially point by point, the total quantity of data is restricted by any reasonable inspection time limitation.

2. **Developmental Results.** During the accelerated program, a large number of gamma transmission scans were made on a wide variety of nuclear warheads. The presentation here is limited to some examples demonstrating the results achievable on those operational U.S. weapons systems specifically designated in the scope of work. The data are presented generally as transmitted intensity (counts/channel) as a function of source position (channel number). Thus, low intensities represent regions of high opacity (integrated μ x) between source and detector.

Figure 54 displays a scan along the axis of the W62.

Fig. 54.
Gamma transmission scan along the axis of the W62.

Gamma transmission scans were made of several different multiple systems, each consisting of three warheads; however, the extension to varying numbers of warheads can be inferred for most reasonable arrays. Two

Figures 55 and 56 are scans of the W53, which is the single warhead deployed on the Titan II. This operational U.S. weapon is considered representative of the weapon design expected in large Soviet systems such as the

b(1)

Fig. 55.
Gamma transmission scan of the W53 across the primary region.

Fig. 56.
Gamma transmission scan of the W53 across the secondary region.

principal geometries used for the scans are displayed in Fig. 57. In the "singlet" geometry, the NaI detector is adjacent to one of the warheads, and the source path is on the opposite side of the system. In the "doublet" setup, the detector is midway between two warheads. The nomenclature is consistent with that used to describe the passive scans. Admittedly, these are special orientations; however, scans made at intermediate locations have been found to be just as valuable. In fact, scans made with these two selected orientations possess a left-right symmetry about the source centerline position shown in the figure.

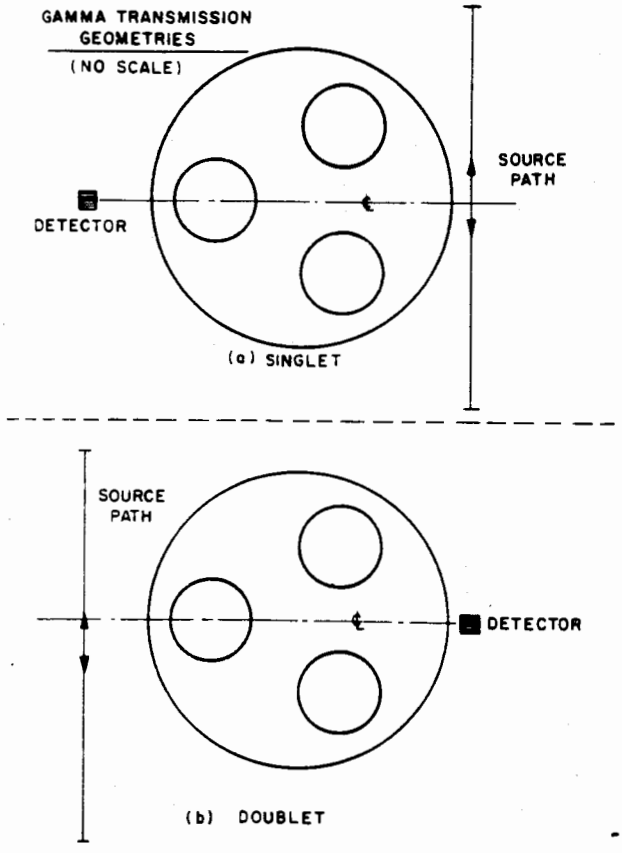

Fig. 57.
Schematic layout for the singlet and doublet geometries used with the gamma transmission technique.

The first multiple system scanned was composed of three Mk 28 warheads, placed in a very close-packed array, as shown in Fig. 40.

To compare scans using Ge(Li) and NaI detectors, Figs. 58 and 59 are singlet scans, respectively, of the Mk 28 mock multiple at Pantex, taken at the primary elevation with the same source scan rate. It is clear that, under these conditions, the greater efficiency of the NaI detector yields scans with more detail than the Ge(Li) detector, despite the inherently greater dynamic range of the latter.

Figure 60 is the doublet scan of the Mk 28 mock MRV at the primary location with the NaI detector. In this particular case, the linear motion of the source was

Fig. 58.
Singlet gamma transmission scan of the Mk 28 mock MRV across the primary region using the Ge(Li) detector.

Fig. 59.
Singlet gamma transmission scan of the Mk 28 mock MRV across the primary region using the NaI detector.

not adequate to permit a fully symmetric scan. The source centerline position is located near channel 175 as indicated. If this were an unknown system, a quick comparison of the singlet and doublet scans of Figs. 59 and 60 would indicate that the system is not symmetric to this rotation by 120° and is probably therefore multiple.

Fig. 60.
Doublet gamma transmission scan of the Mk 28 mock MRV across the primary region.

The second multiple warhead system to be scanned was an operational Polaris A-3 containing three W58 warheads. As an example, Figs. 61 and 62 show the singlet and doublet scans, respectively.

The third multiple warhead system to be studied was the operational Minuteman III MRV system containing three W62 nuclear packages.

All of the scans discussed above were carried out in an assembly bay. It has been argued that inspection

Fig. 61.
Singlet gamma transmission scan of the Polaris A-3 across the secondary region.

Fig. 62.
Doublet gamma transmission scan of the Polaris A-3 across the secondary region.

techniques such as the gamma transmission scheme are fine for application in a laboratory environment, but could not be used in the confining geometry of an operational silo. This argument may be refuted by Fig. 66, which shows a singlet scan of a Minuteman III operationally deployed at Minot AFB. This scan is identical to the corresponding scan, Fig. 63, taken in the assembly bay.

3. **Dynamic Range and Spatial Resolution.** Returning to a discussion of the dynamic range and spatial resolution of the technique, both properties determine the inspection reliability and intrusiveness of the technique.

Using the NaI detector, as proposed, the dynamic range of the gamma transmission technique is limited to about 10^3, as determined by scattering in the system under inspection. Some of the scattered gammas are only slightly degraded in energy and are recorded in the NaI detector as direct unscattered events. The dynamic range is not changed by changing the radioactive source strength, although, of course, the transmitted intensity is. The present 42 mCi ^{232}U source was chosen to be about as intense a source as could be tolerated by the system electronics. Unattenuated count rates of approximately 5×10^3 counts/sec in the 2.6-MeV peak are common. The total count rate in the entire gamma-ray spectrum may well be 100 times this rate, which approaches the maximum count rate capability of the electronics.

The source intensity could be reduced slightly without a loss of dynamic range. However, this would reduce the statistical quality of the data obtained, or

Fig. 64.
Doublet gamma transmission scan of the Minuteman III across the secondary region.

Fig. 63.
Singlet gamma transmission scan of the Minuteman III across the secondary region.

Fig. 65.
Axial gamma transmission scan of the Minuteman III. The detector was at the doublet location.

Fig. 66.
Singlet gamma transmission scan of the Minuteman III across the secondary region. This scan was made on a deployed system in an operational silo.

necessitate increasing the length of time to perform the inspection. Neither result appears justified by any minor benefits to be obtained from a smaller source.

Fig. 67.
Gamma transmission data showing the result of background subtraction. The background was introduced

Table V displays the influence of background on the statistical accuracy of the data. The example chosen is the minimum near channel 63 in the data displayed in Fig. 67. Table V gives the accuracy achieved for three cases. Case I has no background introduced by the inspected system. Case II is that observed in the work on the Polaris A-3, which amounted to a background level nine times the net signal at the minimum. Case III is a hypothetical case in which the background level has been increased by a factor of 10 over that observed with the Polaris A-3. Only in Case III does the accuracy deteriorate significantly. It should be remembered that the example selected was a minimum in the data, i.e., a "worst case" example.

The linear spatial resolution of the gamma transmission technique, as proposed, is determined by the physical size of the source and detector. In the work reported here, the source was small (~ ½ in.) and the 3 by 3 in. NaI detector was used. The resulting spatial resolution is therefore about 2 to 3 in. Table VI summarizes data related to the intrusiveness of the gamma transmission technique by displaying some of the dimensions of the W62 warhead as inferred from the axial scan of the Minuteman III, Fig. 65.

Alternatively, the transmission minima can be used (an easier feature to pick out) and a correction can be made which depends on the detector size and scan geometry. This latter technique was

TABLE V

EXAMPLE OF DEGRADED STATISTICAL ACCURACY DUE TO BACKGROUND

Case	Observed Counts/ Channel	Background Counts/ Channel	Net Counts/ Channel	Accuracy (%)
I	365	0	365	5
II	3700	3335	365	17
III	33365	33000	365	50

TABLE VI

LINEAR DIMENSIONS INFERRED FROM THE GAMMA TRANSMISSION SCAN OF THE MINUTEMAN III, FIGURE 65

used in a series of laboratory measurements on a bare pit. Even with this technique, errors of 5 to 10% remained in the inferred diameter. Thus Table VI is a realistic presentation of the accuracy with which dimensions can be inferred from a gamma transmission scan.

The inferred diameters of primary or secondary from a single measurement such as presented here are also subject to an error from the possibility that the scan was not exactly along the axis of the system and hence a chord rather than a diameter was being measured. For reasonable offsets, this error is fairly small. Given enough inspection time, this error can be reduced to negligible proportions by taking several closely spaced scans.

In this analysis, the relative positions of source, warhead, and detector are known so that the most accurate case is represented. In an inspection of an unknown system, some additional uncertainty would be introduced by the errors in estimating warhead location. It is therefore concluded that the large dimensions, such as warhead separation, or primary-to-secondary distance, can be inferred reasonably well. It is much more difficult to infer dimensions of the order of the spatial resolution, e.g., the diameters of the primary and secondary. An attempt at a measure of small dimensions, e.g., the primary shell thickness, is meaningless.

The effective linear resolution of the gamma transmission technique is also influenced by the rate of data taking. As an example, the Polaris A-3 data of Fig. 62 were accumulated every 5.5 sec, corresponding to a source motion of about ¼ in. per channel. The same scan is displayed in Fig. 68 where data points were accumulated every 20 sec, corresponding to about 1 in. per channel. Most of the detail is preserved, as expected, since the smearing due to source motion is still less than the inherent spatial resolution of the 3 by 3 in. detector. For a source motion of ~ 3 in. per channel the data are becoming marginal with only one or two points per minimum. At 9 in. per channel it is obvious that the data are useless for an inspection technique. A data rate of about ½ to 1 in. per channel appears optimum for the expected conditions.

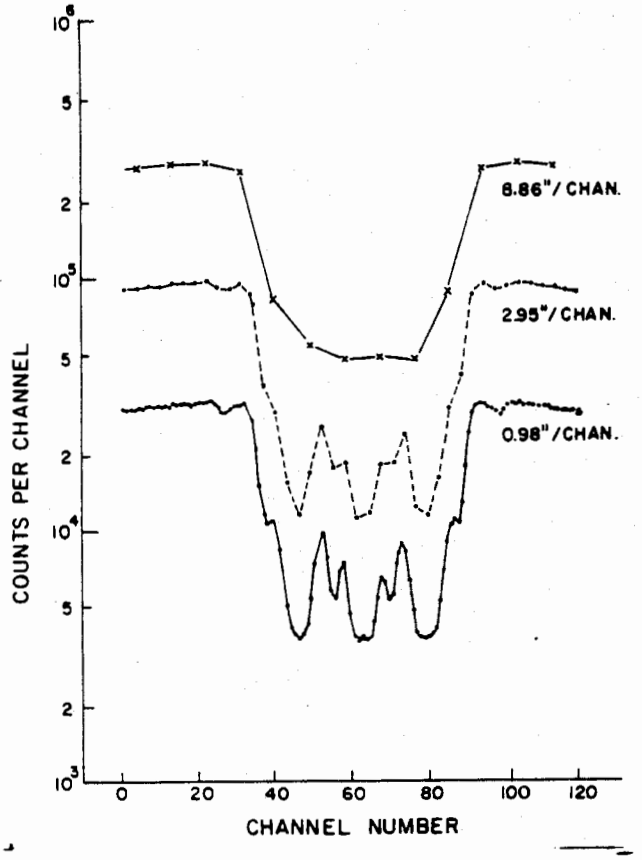

Fig. 68.
Gamma transmission data showing the influence of data-taking rate on linear spatial resolution.

D. Radioactive Source (γ, n) Technique

1. **Introduction.** The (γ, n) technique has been developed specifically for large strategic weapons systems that might prove more difficult for the passive gamma and neutron techniques. In particular, the (γ, n) technique appears appropriate to various models for single and triple warheads. Experiments were done on a variety of weapons and components and were duplicated calculationally using Monte Carlo neutron codes. This process served to normalize the neutron codes generated at LASL could be calculated for (γ, n) response. These results were evaluated and used to determine the requirements on source intensity, collimation, and detector sensitivity.

2. **Neutron Detector.** The general requirements for the detector are (a) high neutron detection efficiency for low-energy neutrons and (b) low gamma-ray sensitivity.

The gamma sensitivity of a slab neutron detector results from gamma pulse pile-up. Since neutron pulses

are considerably larger than a single gamma pulse, the γ/n ratio can be reduced by operating at high discriminator bias levels. Hoever, this process also reduces the absolute neutron detection efficiency. An equally profitable approach is to operate with shorter time constants in the neutron pulse amplifier, which decreases the number of piled-up gamma signals accepted in a given count interval. These and other practical considerations led to the final detector design shown in Fig. 12.

The efficiency of this detector is about 0.003 for a point source of 0.5-MeV neutrons at 100 cm. The efficiency for (γ, n) or induced fission neutrons will be within ± 10% of this value. The relative gamma and neutron sensitivities are displayed in Fig. 69. With a discriminator setting of 1.50 (0.5-μ sec time constant, 4-V neutron pulses) the 6 R/h gamma count rate due to pile-up is $\leqslant$ 0.2 counts/sec, and the corresponding neutron counting efficiency is 70% of the zero bias value. Since the gamma source shield and collimator is such as to reduce the gamma field at the neutron detector to $\leqslant$ 100 mR/h for the inspection source, the basic discriminator settings deduced from Fig. 69 should be conservative.

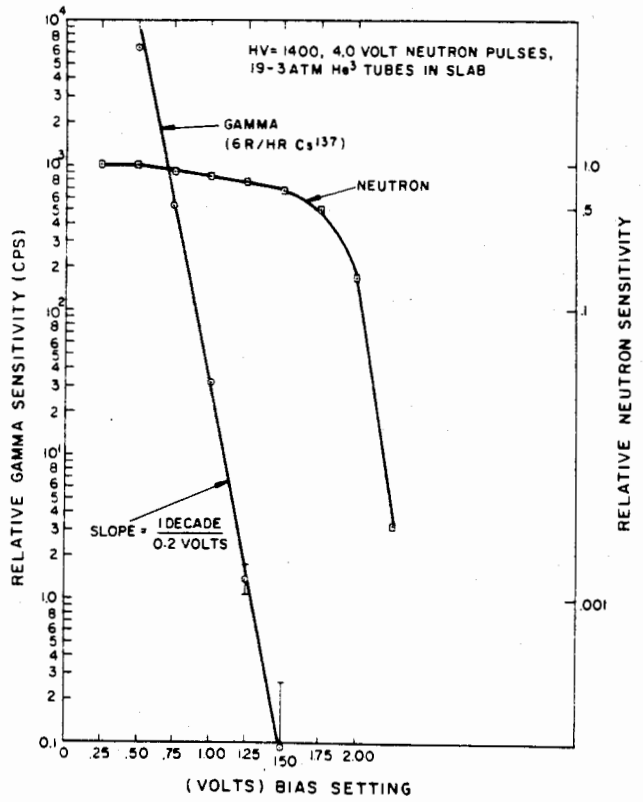

Fig. 69.
(γ, n) detector relative gamma and neutron sensitivities as a function of detector bias.

3. Gamma Sources. When considering the fraction of usable gammas ($E_\gamma \geqslant 2.23$ MeV) in the total source, only two sources appear suitable for photodisintegration of deuterium. These are the 2.61-MeV ^{208}Tl source (^{232}U or ^{228}Th as the parent isotope) and the 2.76-MeV ^{24}Na source. Both have a very high usable-to-total gamma ratio; that is, gamma dosage to personnel and materials is minimized for a given (γ, n) effect.

The (γ, n) experiments at LASL and Pantex were performed with 15 and 25-mCi, 2.61-MeV gamma sources from 20/ppm ^{232}U in ^{233}U material. However, the results for 2.61-MeV work are equally valid for 2.76 MeV. The $D(\gamma, n)$ cross section at 2.61 MeV is 1.36 mb, and at 2.76 MeV is 1.60 mb. Further, a Monte Carlo neutron calculation indicated that the difference between neutron penetrabilities

The (γ, n) experiments indicated the need for approximately 250 mCi (9.25×10^9 γ/sec) of 2.61-MeV equivalent gamma activity for reliability. The choice of the best source for the (γ, n) technique is not yet resolved. It does not appear that ^{232}U or ^{228}Th in the required activity can be obtained readily. On the other hand, ^{24}Na has a short half-life (15.0 h), which means that the logistics of supplying the 250-mCi source are complicated. The requirement for 250 mCi is not abolute--the source strength could be as high as 1 Ci or as low as 100 mCi. This range corresponds to about 50 h useful ^{24}Na lifetime. Even if ^{232}U or ^{228}Th sources were available in a 250-mCi size, experience at the Savannah River Laboratory with ^{228}Th sources indicates that (α, n) backgrounds could be a problem. That is, in the ^{232}U - ^{228}Th decay chain to ^{208}Tl, five or six high-energy alpha particle decays also occur. These alphas can interact with oxides or other low-Z impurities in the source to produce neutrons. A source would have to be very carefully prepared to avoid excessive (α, n) backgrounds.

For the beryllium sensing source, ^{124}Sb is a source of 1.69-MeV gammas of sufficient energy to produce $Be(\gamma, n)$ neutrons but are well below the $D(\gamma, n)$ threshold. Antimony-124 has a half-life of 60 days, so that a source could be made up conveniently to serve a few months inspection period. New sources would have to be provided periodically. It appears that a ^{124}Sb source providing about 25 mCi of 1.69-MeV gamma activity is suitable for the beryllium sensing measurements. This would mean an actual 50-mCi ^{124}Sb source because the 1.69-MeV gamma occurs in only 50% of the ^{124}Sb decays.

4. Gamma-Ray Shield and Collimator. A collimator having a FWHM of about 35 cm at 100 cm from the source has been used as the design criterion.

In a circumferential scan this resolution would be adequate to resolve multiple warheads.

An additional requirement on the collimator-shield is for adequate neutron detector and personnel shielding. Experimental dose measurements with the 25-mCi 2.6-

MeV source indicated that about 6 in. of lead equivalent would be required for a nominal 250-mCi source. This reduces the gamma field to ≤ 100 mR/h at the neutron detector. Personnel dosage rates would be within tolerance with this shield based on a scale-up from shields used with the 25-mCi source.

5. (γ, n) **Experimental Measurements.** The various systems interrogated, together with source-to-target separations and the basic experimental results, are shown in Table VII. A wide range of weapon designs was covered.

These experimental measurements were relatively easy to carry out, even in the presence of a considerable background, and scaling these experimental measurements to different source - target distances is relatively straightforward. Data were taken on the W53 in which the source-to-target distance was varied. The effective (γ, n) count rate varied approximately as $1/R^2$ over the range 40 to 120 cm. For separations greater than 120 cm, the variation follows more nearly a $1/R^3$ or $1/R^4$ variation.

Table VIII shows the scaled count rates for a 250-mCi source at 100 cm for these same systems. Also included in Table VIII is a calculated (γ, n) count rate for three warhead models.

As will be shown in some of the experimental scans, statistical accuracies of this order are tolerable.

A (γ, n) scan of warhead requires two measurements at each scan position: one with the collimator open and a second, background, run with the collimator plugged. Two to three inches equivalent of lead are sufficient to plug the collimator. A background taken in this fashion automatically takes into account any effects the gamma source may have on the neutron detector.

TABLE VII

(γ,n) EXPERIMENTAL RESULTS WITH 25-mCi, 2.6-MeV SOURCE

UNCLASSIFIED

TABLE VIII

SCALED (γ,n) COUNT RATES FOR A 250-mCi, 2.6- OR 2.76-MeV SOURCE AT 100 CM

this scan the count time for each individual point was 200 sec.

Figures 71 and 72 show (γ, n) scans of the W53.

Figure 71 shows a W53 scan perpendicular to the cylindrical axis at the approximate center of gravity point of the warhead,

From these observations it appears that the required spatial resolution for MRV detection can be obtained with the (γ, n) technique.

6. (γ, n) Calculations. The observed (γ, n) count rate can be calculated as the product of the following factors:

Fig. 70.
XW67 (γ, n) scan with 25 mCi source and 40 cm source-to-centerline distance.

$$\text{Dcps} = \left(L_\gamma\right)\left(\frac{\Omega}{4\pi}\right)_\gamma\left(e^{-\mu x}\right)_\gamma\left(f\right)\left(\alpha\right)\left(\Sigma n\right),$$

where: Dcps = observed net (γ,n) count rate.

L_γ = gamma source intensity (photons/sec).

$\left(\frac{\Omega}{4\pi}\right)_\gamma$ = solid angle subtended by the gamma source at the ^{6}LiD.

$\left(e^{-\mu x}\right)_\gamma$ = attenuation of the gamma rays in passing through intervening materials.

Typical values for the W53 warhead systems are

Typical values of f for the systems calculated are

All the factors in this formula, except α, can be calculated in a simple, reasonably accurate fashion. It is thus possible to evaluate α experimentally by measuring Dcps for a known system and supplying the other factors.

The Monte Carlo neutron code calculation of α was done by setting up the warhead geometry and using a volume source of D(γ, n) neutrons

Emergent neutron spectra were calculated as well as total neutron fluxes. A few parameter studies were done to determine the effect of additional shielding materials on neutron output.

The calculational and experimental values of α are shown in Table IX. In the two cases (XW67 and W53) where an experimental and calculated α comparison can be made, the apparent agreement is to within ± 30%. This agreement lends credence to the calculated values for the

To investigate calculational sensitivity to design features, some parameter studies were done

Fig. 71.
W53 (γ, n) scan perpendicular to axis at center of gravity with 70 cm source-to-centerline distance.

Fig. 72.
W53 (γ, n) scan at spherical end with 49 cm source-to-centerline distance.

Figure 73 shows the SORS Monte Carlo neutron code calculation of the emergent (γ, n) neutron spectrum

TABLE IX

CALCULATED AND EXPERIMENTAL α's

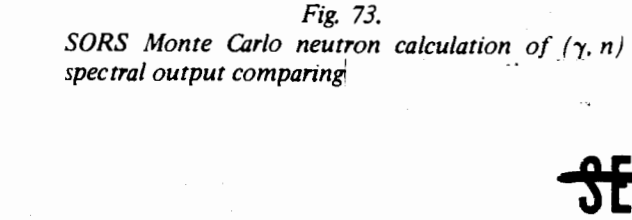

Fig. 73.
SORS Monte Carlo neutron calculation of (γ, n) spectral output comparing

from two very different systems, arbitrarily normalized at the low-energy end. The spectra are easily seen to divide into two separate components--induced fission neutrons and moderated D(γ, n) neutrons.

Both limiting systems appear to be reasonable candidates for the (γ, n) technique.

IV. Inspection Intrusiveness

The considerations of inspection intrusiveness focus primarily on the warhead design parameters which might be revealed in the course of an inspection--with some relation to reentry vehicle design where appropriate. Missile or launch site characteristics were largely ignored as being outside the scope of this effort.

Warhead design information obtainable from an inspection can be qualitative, quantitative, or both, and can be observed directly or inferred from some combination of observables. to be more ambiguous than that directly observable from the data. Clearly, the specifics are dependent on both the type of weapon system inspected and the detection technique applied.

For the discussion in this section, the present real case has been assumed. i.e.,

. Situations other than this are considered in Section V on countermeasures.

The learning curve for each weapon system and each detection technique resulting from repeated inspections has not yet been fully explored. The most significant potential for extracting more information from cumulative inspections

Uncertainties introduced by counting statistics, spatial indexing of source and detector, and warhead tolerance build-up in the assembly of large and complex systems appear to make such if not impossible. Thus the feasibility of applying sophisticated information analysis techniques

However, improvement required to affect significantly the intrusiveness.

Table X summarizes the information that would certainly be obtained in the first inspections with the prototype equipment. Data presented in earlier sections of this report illustrate these categories quantitatively. It should be recognized that supplementary or confirmatory information may be available from many means other than nuclear detection and would be used freely in any adversary evaluation of the inspection data.

A further problem arises in any discussion of intrusiveness because of the distinction between that information which is classified by current security regulations and that which would be news to USSR weapon designers.

Additional comments on intrusiveness are contained in the report of the Ad Hoc Working Group of the FT-25 Joint Working Group (see Appendix).

V. Countermeasures

Deliberate countermeasures intended to subvert a negotiated agreement for on-site inspection might include several approaches.

The possibilities for delaying or avoiding inspection are practically endless (starting with a simple decision not to reach any agreement) but were mostly ignored in this study. Methods of obscuring the results of an inspection are more germane to the weapon design and detection instrumentation problems and therefore were considered.

A. Inspection Equipment Vulnerability

TABLE X

OBTAINABLE DESIGN INFORMATION

Technique	Direct Observation
Passive gamma	^{239}Pu, ^{235}U, ^{238}U, and natural Th presence by γ lines; gross location by spatial scan.
Passive neutron	^{240}Pu and ^{238}U presence by spontaneous fission; gross location by spatial scan
Gamma Transmission	Integrated attenuation in line of sight between source and detector at single gamma energy
(γ, n)	$D(\gamma, n)$, $Be(\gamma, n)$ and coupled fission neutrons

Some nervousness about inadvertent mechanical damage to weapons or launchers is to be anticipated also.

Commonality is more likely to be a feature of the mechanical hardware for inspecting submarine-launched systems than for silo-launched weapons.

deck, dock, maintenance building, or other relatively flat, open space. Portable hoists, stands, and jacks may then be universally applicable.

Problems with silos are aptly illustrated by the experience acquired in the Minuteman III inspection at Minot AFB. A substantial mechanical engineering effort, including on-site surveys of typical silos prior to the mechanical design phase, was needed to devise suitable fixtures and the procedures for their installation. The resulting hardware, for the most part applicable only to the Minuteman system, is based on specific silo layouts, attachment points, access platforms, and work-cage facilities. The critical point, of course, is that prior access to each specific weapon system is required to design and fabricate the system-peculiar hardware. Otherwise, an inspection will be impossible.

B. Inspection Team

It seems clear that several levels of inspection teams are appropriate to the verification concept because different skills and experience may be needed in different situations, different time scales may be involved for inspections, and, in fact, different equipment might be made available to the several teams.

Another foreseeable distinction which might apply occurs at the first application of a negotiated modification to inspection equipment or techniques. Certainly, some provision must be made for such changes. Finally, as already noted, the mechanical fixture problem may be markedly different in various cases.

Because the routine case of repetitive inspections, or perhaps any inspection of an SLBM, probably involves fewer people and less time and equipment, only the hardest case (first inspection in a silo environment) is described further here. The assumption is made that normal work schedules apply and that the appropriate preinspection surveys and design work are completed. Then a minimum of five technical personnel are needed to complete an inspection, and the required skills and experience are generally along the following lines:

PhD/MS: Experimental nuclear physicist or engineer, nuclear instrumentation and weapon design background; supervisor.

MS/BS: Experimental nuclear physicist or engineer, nuclear instrumentation and

VI. Operational Considerations

In addition to the prototype instrumentation development discussed so far, some feeling for operational considerations has naturally evolved during the field tests. Because guidance on various aspects of inspection team make-up and deployment was requested by ACDA in the initial planning, these considerations are reported here.

A. Mechanical Fixtures

The prototype equipment discussed earlier was essentially the instrumentation common to the inspection of any weapon system. Each inspection will be unique, however, in the hardware necessary to position and support detectors and sources. Shields and collimators are relatively massive, and personnel safety requirements alone dictate substantial, mechanically stable fixtures.

radiation detection background.

BME: Mechanical engineer, missile systems and field test background.

Senior Technician: Electronics and nuclear instrumentation.

Senior Technician: Mechanical and electrical systems, field test.

C. Inspection Time

All equipment required for all four techniques will be used in the first inspection of a weapon system. The maximum time required to collect and record data is approximately one working day per technique. Allowing some time for equipment setup and checkout at the site, the technical work would consume about a normal working week (one shift/day, 5 days/week). Logistic or administrative requirements for selecting and reaching the site should be estimated and added separately.

Obviously, the inspection time can be measurably reduced, as can the size of the inspection team, once the routine and the responses are established for a specific weapon system. The extent of the reduction should remain flexible until some experience is gained.

VII. Summary and Conclusions

The essential technical conditions enabling the inspection system to verify multiple warheads inside a missile shroud by nuclear means include:

- Direct and complete access to the exterior of the shroud by a team of (at most) five qualified nuclear weapon scientists, engineers, and technicians for (at most) 40 working hours.
- Confirmation by portable nuclear survey instruments that radiation backgrounds in the working area are below negotiated levels, both for personnel radiation safety and for inspection purposes.
- Preparation of mechanical supports and fixtures to position equipment (such as nuclear detectors, collimators, and radiation sources having weights up to several hundred pounds and volumes up to several cubic feet) in the immediate vicinity of the shroud.
- Access for electronic data processing and recording equipment requiring about 20 ft^3 of space within about 50 ft of the working area around the shroud and with provisions for cable runs between the two areas.

The essential inspection data and the information derived therefrom include:

- Collimated gamma spectra taken at a number of spatial locations around the shroud.

[redacted] materials. The spatial res- [redacted] detector collimation and scanning is adequate for dimensions of the order of pit diameters or larger, to allow distinguishing separate warheads or stages, but is not sufficient to obtain any component design detail. Absolute intensities or intensity ratios at several energies are nonunique in terms of amounts of source materials or intervening absorbers and therefore are not revealing in design detail.

- Collimated fast neutron count taken at a number of spatial locations around the shroud. The measurement does not distinguish the source of the neutrons *per se*, but those observed arise predominately from spontaneous fission in [redacted] The spatial resolution is generally poorer than that of the passive gamma spectra scans, and the two passive techniques would be redundant for some designs in the absence of countermeasures. However, reasonable design variations may, for example, make the 400-keV ^{239}Pu gammas difficult to observe while the ^{240}Pu neutrons still stand out, or vice versa. In addition, [redacted]

DOE/NNSA (b)(1)

- Gamma transmission scans with a fixed, uncollimated NaI detector and a moving isotopic gamma source. The detector is used in a single-channel mode set on the source energy so that the unscattered transmitted beam is detected. An array of scans is taken to locate high-density shapes consistent with primary pit, secondary, and radiation case patterns. Spatial resolution and dynamic range are controlled to be as unintrusive as possible within the bounds of high confidence in identification. The principal deficiencies in the transmission technique result from the inability to distinguish between inert and nuclear materials in the interpretation of the scans, and from the complexity of the traces

- Photodisintegration of deuterium in thermonuclear fuels using a collimated, isotopic gamma source and a co-located, uncollimated, moderated neutron detector. Spatial resolution of the order of the

The technique locates and confirms identification of medium and large secondaries, thus providing a capability for some reasonable design variations in which the passive gamma and neutron scans are inadequate.

All the equipment, techniques, and conditions described above have been successfully tested in laboratory and field experiments on a wide variety of U.S. warheads and on operational U.S. strategic missile systems. Confirming calculations and extrapolations to USSR designs as presently understood have also been made. A study of possible countermeasures was carried out concurrently with the sensor development, and the trade-offs between intrusiveness and susceptibility to evasion were evaluated. Given the conditions and equipment as described, the conclusions derived from the accelerated program are:

- The inspection techniques and the prototype equipment are adequate for all current U.S. strategic missile systems and will provide detection of Soviet multiples with confidence if current U.S. concepts of these are reliable.

- Evasion of the techniques in combination is difficult and not considered practical for current U.S. systems. Because of the availability of larger throw weights, evasion might be more possible for Soviet designers but at a considerable cost.

- To the extent that Soviet weapon technology is currently understood, this information would appear to be well known to them already.

Acknowledgments

The authors are clearly indebted to many people for the cooperation which permitted timely completion of this accelerated effort.

In particular, we thank Capt. Richard S. Garvey (USN) and Lt. Col. Kenneth W. Bull (USAF) of ACDA/WEC for their participation and support in the entire FT-25 effort; Donald I. Gale (AEC/DMA), Robert daRoza (LRL), Paul Whalen (LASL), and Allan M. Fine (Sandia) for the ad hoc working group support; and John W. McMullen and John W. Hahn (LASL ENG-7) for the essential engineering in the field.

References

1. Test Plan, FT-25, Detection of the Presence of Nuclear Weapons, Secret Restricted Data, Field Operations Division, Weapons Evaluation and Control Bureau, Arms Control and Disarmament Agency (March 26, 1969).

2. General Guidance for the FT-25 Accelerated Program, Secret Restricted Data, FT-25 Joint Working Group (May 26, 1970).

3. Preliminary Report, FT-25, Detection of Multiple Nuclear Warheads, Phase I, Secret Restricted Data, Arms Control and Disarmament Agency (May 1970, revised October 1970).

4. R. daRoza (Ed.), COVD 1046, Secret Restricted Data, Lawrence Radiation Laboratory, Livermore (to be published).

APPENDIX

AD HOC WORKING GROUP REPORT

COUNTERMEASURES AND INTRUSIVENESS

A. Introduction

The employment of technical devices to verify an arms control agreement poses a number of questions regarding the capabilities of such devices. Two questions of significant importance are the effectiveness of the system against countermeasures that could be employed and the intrusiveness of the system.

Obviously, there is a trade-off in the design of the detection equipment between its effectiveness against countermeasures and its intrusiveness--the better the system, the greater its capability against countermeasures and correspondingly the greater the potential intrusiveness. It is recognized that the prototype detection system was designed judiciously in full knowledge of these factors.

In this Appendix, an assessment is made of the countermeasures and intrusiveness problems in the context of the capabilities of the above described prototype detection system. This assessment was made by an Ad Hoc Working Group to the FT-25 Joint Working Group. The Ad Hoc Group was comprised of members from AEC/DMA, DoD/OATSD(AE), IDA, LRL, LASL, and SLA; the Group worked closely with the LASL technical staff who developed the detection equipment. It is emphasized that this study of evasion and intrusiveness was theoretical and empirical only, based on a knowledge of detection system capability. A specific experimental program would be required to further clarify and verify various aspects of these matters.

Essential to an assessment of the countermeasures and intrusiveness matters are a definition of the detection system to be considered and certain assumptions concerning the radiation background in which the system is expected to operate. These topics are discussed in the next section, followed by a brief statement of the capability of the detection system for treaty verification of various representative weapon systems. Subsequent sections provide evaluations of the countermeasures and intrusiveness problems.

B. System Definition and Environment

1. System Definition

The inspection system to be analyzed regarding countermeasures and intrusiveness consists of four elements, described in some detail previously in this report. Briefly, they are:

a. Passive gamma spectrum monitoring,
b. Passive neutron monitoring,
c. Gamma transmission measurements, and
d. Photonuetron activation measurements.

Since the detection equipment is proposed for use at deployed missile sites,

. It should be a definite requirement that acceptable radiation levels be negotiated for a verifiable treaty.

The difficulty expected from the environmental background is minimal. Backgrounds of a few hundredths of a mR/h would be considered normal and should offer no appreciable problem for the prototype detection system components.

3. Warhead Radiation

The radiation from the warhead system itself may be considerably higher than from the environment.

For gamma transmission measurements, the option of using several sources with different high-energy gamma rays should suffice to overcome a radiation problem with this inspection element; a high gamma-ray background at each of the preselected gamma-ray energies would be definite grounds for suspicion.

C. Capability of the Prototype Equipment

Reasonable capability against Soviet strategic systems is probable with the following important reservations. It is implicitly assumed in discussions of inspection capability that inspection of a single warhead upon which *no* attempt has been made to evade, spoof, or modify for purposes of confusion will produce data to yield a clear, unambiguous certainty concerning the nature of the payload.

In essence, it should be emphasized that the inspection process is an implicit one--the nature of the payload must be inferred from the data obtained. Data interpretation is made complex in proportion to the degree that USSR designs are *different* from our own.

D. Countermeasures

1. General

The word "countermeasures" in this report is defined

A detection system can be countermeasured if there is a willingness to accept the penalty of increased complexity and possibly decreased weight available for warheads. The degree of penalty depends on the detection system, the warhead systems involved, and the countermeasure techniques employed. Countermeasuring does not necessarily come easily. However, for the U.S. and the USSR

Countermeasures can take two forms--evasion and spoofing. "Evasion," as used in this report, means the use of techniques to so obscure multiple RVs that they either look like a single, cannot be determined as multiples, or give no information concerning the number of RVs present.

These matters are discussed further in para. 2.g below.

Techniques of this type are discussed in para. 2.h below.

and is discussed briefly in para. 2.i below.

Spoofing, on the other hand, relates to the use of techniques employed with one warhead to confuse, embarrass, or discredit the inspecting nation.

etc. Misinterpretations could arise from inherent warhead design.

An interesting possibility is where a spoof of a single warhead is challenged by the inspecting nation as a multiple.

Presented below is more quantitative information on evasion methods designed for specific inspection elements.

2. Evasion

a. *General.* This section discusses techniques that could be employed against each of the four detection elements to degrade performance, and gives an overall assessment of the capability of the detection system to perform its inspection mission if each of the detection elements is degraded.

Hand calculations were made for angular and tangential scans through the primary and secondary regions and for an axial scan, with the following assumptions:

*Decoys should be a matter for negotiation.

- Relative counter efficiency equal to unity for a viewing cone 12° in total angular width.
-
- Attenuating elements adjacent to active elements were zoned similarly to active elements.
- Attenuating elements closer to the detector were zoned either similarly to active elements or merely with appropriately increased thickness as dictated by departure from normality to the line-of-sight according to the more appropriate geometry.

In addition to signal diminuation due to attenuating elements the attenuation of active elements, both in warhead components

In either case, the gamma transmission inspection is not evaded.

c. Passive Neutron. Passive neutron observations for plutonium-bearing warheads poses the same geometrical problems as passive gamma; hence, the methods for source location outlined above would be applicable in this situation as well. The results of neutron scans should also be similar to those of gamma scans but with reduced resolution resulting from slightly poorer detector collimation, greater source scatter, and poorer signal-to-noise ratio.

This would be reduction sufficient to markedly degrade the neutron detector proposed but would not appreciably affect the gamma signal from the primary.

d. Gamma-Ray Transmission. Techniques for evading the gamma-ray transmission inspection method involve primarily the use of shielding materials surrounding the multiple RVs to degrade the signal-to-noise ratio. Analyses and computations on the gamma-ray transmission technique lead to the conlusion that it is extremely difficult to accomplish evasion successfully and confidently as long as the attenuation encountered does not exceed system dynamic range over entire regions of interest. (Critical to this statement is the assumption that actions--either intentional or not--have not been implemented that confuse the signal pattern from a single-RV system.) For example, it was not possible to show that the "clutter" produced by a multiplicity of reasonable, unshielded RVs can be arranged to produce a system response that looks like a single RV. However, deciding just what is present, for several judiciously arranged RVs, could be difficult. It is recognized that just this situation could be faced in the inspection of Soviet normally designed and positioned multiple RVs.

TABLE A-I

EVALUATION OF EVASION METHOD

Evasion Method	Inspection Subsystem			
	Passive Gamma	Passive Neutron	Gamma Transmission	Gamma Neutron
	Poor	Poor	Poor	Fair/Good
	Good (D)	Poor (D ?)	Poor (D)	Poor
	Good (D)	Good (D)	Poor	Poor
	Good	Good	Poor	Poor
	Good	Good	Poor	Poor
	Fair/Good	Poor	Good (D)	Poor

NOTES: Techniques for maintaining close spacing between RV components by physical location of RVs, etc., make the spatial resolution task more difficult for the inspection system.

Poor - The evasion method is not applicable against the inspection subsystem, or its effectiveness against the subsystem is very low.

Fair - The evasion method has some effectiveness against the inspection subsystem.

Good - The evasion method is effective against the inspection subsystem.

D - The evasion method is detectable by the inspection subsystem.

UNCLASSIFIED

UNCLASSIFIED

UNCLASSIFIED

UNCLASSIFIED

E. Intrusiveness

1. General

"Intrusiveness" in this report refers to that technical information affecting the security of the host nation obtainable by the detection system itself. For this analysis, characteristics of nuclear weapons and possibly RV designs are considered the information of prime concern obtainable from application of the prototype detection system.

In a bilateral situation, such as an agreement between the U.S. and the USSR, certain information may be classified yet not be intrusive. Currently the U.S. classifies information for which the unauthorized disclosure would affect the national defense. Accordingly, information is classified and protected from all unauthorized persons without regard for their nationality. Thus, certain basic nuclear warhead design information is classified even though the facts may be well known by the USSR. Yet, for the USSR to learn such information in a verification inspection may not be considered intrusive because it should not affect our national security. The same information, however, if revealed to a nation without the capability to develop nuclear warheads, could potentially affect our national defense and would be intrusive.

Complete analysis of intrusiveness is very complicated, requiring experts in foreign and domestic technology, political science, and national defense. This analysis is beyond the scope of this effort. Considered here are those items of information that a detection technique or combination of techniques may reveal. Whether or not the disclosure of these items would be intrusive is left to others.

Exploring the capability of each detection component to reveal potentially intrusive information is, indeed, a most important consideration. The following paragraphs address this question.

2. Current Technologies

There is little question that the application of the inspection equipment to strategic warhead systems will reveal significant information about them to the inspector. The types of information that potentially could be learned can logically be separated into different categories:

- Vulnerability and Hardening
- Primary Design
-
- Components

Table A-II displays the types of information potentially obtainable, specifies the detection element involved, and provides an assessment of the quality of the information. From Table A-II it can be seen that a great deal of information can be obtained and that the gamma transmission detector element can provide the most information.

TABLE A-II

CATEGORIES OF POSSIBLE DISCOVERY

TABLE A-II (cont.)

3. Future Systems and Other Considerations

Even if one assumes that the inspection system proposed will disclose fully the technology of the inspected system, there are still questions attendant to discussing the significance of this intrusiveness for future systems. Some questions that come to mind are:

- Can one expect any changes in weapons design in the future?
- Are these important to our strategic posture?
- Would USSR adoption of these designs be important to our strategic posture?

Based upon history and some directions of research now under study, it appears that the answer to the first question must be yes. It appears imprudent to assume that progress will halt where it is at present. The hardness and yield-to-weight of U.S. strategic weapons has far from reached the limit of conceivable possibility so that there is room for progress.. What is needed are ideas and work, neither of which will halt but which might be spurred by ratiocination on a foreign design process.

Two examples of future U.S. weapon design changes which would be revealed by application of the inspection equipment relate to advanced

The existence of such technology would have implications beyond the strategic area. That is, such a breakthrough would have application to the ABM problem and to tactical nuclear weapons.

The answers to the other two questions are not as straightforward. Regarding the importance of changes to our strategic posture, improvements in the basic parameters of warhead design may or may not be important to the U.S., depending upon the strategy for the force employment.

These are questions that are germane to this problem but are outside the scope of this paper.

It is also difficult to discuss the implications of what we would learn about the USSR technology. It depends greatly upon how accurate our present knowledge is.

In general, any estimate which now must be based upon intelligence could become more accurate.

Information gained would also be applicable to our warhead design programs,

if designers were made aware of the data. Even confusing data could generate ideas for new approaches.

More definitive information could either act as a strong force toward new thinking (if the USSR designs were basically different) or be devoid of such emphasis (if their approaches had already been studied). The situation is sensitive to the USSR state of the art and the similarity of their design approaches to ones that we have already pursued.

F. Conclusions

The prototype inspection equipment was selected judiciously to balance effectiveness against intrusiveness. Interpretation of data obtained with the inspection equipment is an implicit process and is presumably more difficult in proportion to the degree that USSR RV designs differ from those of the U.S. Inspection equipment could be devised that would be more effective and correspondingly more intrusive, or vice versa.

Application of the four subelements now considered requires that sophisticated steps be taken to evade the system if U.S.-type RV designs are assumed,

Application of the inspection equipment to U.S. strategic systems

While specific information on vulnerability and hardness would be obtained only poorly from application of the detection system, general levels could be inferred, so that the matter should be weighed carefully.