LAMD-508

ADWD-230

Redacted Version

SECRET

UNCLASSIFIED

This document consists of 7 pages.
~~No. 33 of 40 copies. Series A.~~

-1-

FAMILY COMMITTEE
Minutes of Twenty-Ninth Meeting
December 21, 1950

RESTRICTED DATA

This document contains Restricted Data as defined in the Atomic Energy Act of 1954. Unauthorized disclosure subject to Administrative and Criminal Sanctions.

DEPARTMENT OF ENERGY DECLASSIFICATION REVIEW
1ST REVIEW-DATE: 8-20-91
DETERMINATION [CIRCLE NUMBER(S)]
(1) CLASSIFICATION RETAINED
2. CLASSIFICATION CHANGED TO:
3. CONTAINS NO DOE CLASSIFIED INFO
4. COORDINATE WITH:
5. CLASSIFICATION CANCELLED
AUTHORITY: DOD
NAME:
2ND REVIEW-DATE: 9/8/91
AUTHORITY: ADD
NAME:

A. Attendance.

The twenty-ninth meeting of the Family Committee was held Thursday, December 21, 1950 at 1:15 PM in Room B-117. Those present were:

G. H. Best	D. P. MacDougall
N. E. Bradbury	J. C. Mark
F. de Hoffmann	L. B. Seely
D. K. Froman	R. F. Taschek
D. B. Hall	E. Teller, Chairman
G. K. Hess	F. M. Walters
M. G. Holloway	

B. Minutes of Twenty-eighth Meeting.

The Committee unanimously adopted the minutes of the twenty-eighth meeting as reported in ADWD-223.

C. Booster.

[redacted] (See item 10, page 5 of the minutes of the 26th meeting.)

DOE b(3)

[redacted]

DOE b(3)

Sandia has furnished samples of the actual sphere cases which will be used for the Greenhouse units. [redacted]

DOE b(3)

D. [redacted]

DOE b(3)

UNCLASSIFIED

SECRET

DOE b(3)

The predetonation problem is now being re-examined in T Division.

DOE b(3)

1. Initiator.

It was agreed that more consultation is needed before the initiator could be frozen. In consequence, it was agreed that MacDougall and Holloway should form a subcommittee on this subject and report their findings to the Family Committee.

DOE b(3)

3. Aluminum Plug.

[redacted] In consequence, it would not be desirable to make the aluminum plug out of 24S aluminum. The Committee therefore requested that the aluminum plug be manufactured from 2S aluminum and also that a sample be saved for analysis of impurities.

[redacted] After this discussion the following position was arrived at. [redacted] A discussion of these items is reserved for January 4 and 11. There follows below a summary of the discussions concerning each item. Hall and Seely presented the status of each experiment.

1. DINEX

It is planned that the experiment cover an intensity range slightly greater than a factor 10^7. This will be done by having two channels record the proton recoils from the 14 Mev neutrons. One channel will only be sensitive to very high signals. Thus it is hoped that the peak from the DT burning can be recorded although its shape will not be known accurately. [redacted]

It will be recalled that the signal is fed from the tower to ground through shielded co-axial cables and NRL is confident that sufficient shielding has been provided. [redacted]

It would seem that anything greater than 1% burning of the DT should be detected successfully by DINEX. It was estimated that the chance of DINEX performing as expected was rather better than even.

2. GANEX

It will be recalled that GANEX used natural uranium as a gamma converter. Experiments during the summer indicated that iron would result in a higher gamma conversion. In consequence, NRL presently plans to use 3 cm of iron for the gamma converter. Taschek expressed some doubts concerning the reality of the iron results and it was agreed that it might be useful to consider backing up the iron by uranium or perhaps to replace the last centimeter of iron by uranium.

It was noted that GAMEX would not yield an absolute value of the 14 Mev neutrons and that the uranium scheme would therefore not introduce any calibration difficulties.

It is expected that GAMEX would successfully record the burning of more than a few percent DT.

3. PHOMEX

If fogging of plates by gamma rays can be prevented, PHOMEX is likely to give the most reliable single number for the quantity of DT that has burned. Probably this number should be good to ± 15%. This is likely to compare favorably with the results from the n,2n experiment which is not reported upon at this meeting.

4. AMEX

Some trouble has been encountered with AMEX. Activation functions of such elements as sulfur seem to vary sharply over the region of interest (i.e., within a few Mev). This throws some doubt on the interpretation of results that might be obtained.

5. TEMEX

There are two stations for TEMEX, one at 200 yards, to determine burning time, and one at 1000 yards to determine temperature. It is estimated that TEMEX has a better than even chance of giving usable results.

6. X-RAY

Drahner, in cooperation with Jacot, has furnished two figures concerning how the present setup looks. These are attached.

At present each spot provides for two sets of independent measurements. In each case detectors have been so arranged that the difficult effect of lines in the spectrum can be subtracted off in evaluating the results. Theoretical work has proceeded on the interpretation of the iron and combination spot at Berkeley. Attention has been given to the question of closing up of diaphragms but there is still some danger from this phenomenon.

It should be noted that the experiment can not be "tested" with a dry run.

While it is dubious whether all aspects of the X-RAY experiment will work simultaneously, it is believed that the chance that the X-RAY experiment will give useful information is quite high. For instance, the experiment has now been so designed that even if intensities and temperatures are not recorded properly, quite a bit of information can be obtained from breakthrough times through the iron and combination spot.

SECRET

UNCLASSIFIED

F. Next Meetings.

The next meetings of the Committee are to take place on Thursday, January 4, 1951 and Thursday, January 11, 1951. [redacted]

Executive Secretary

Distribution:

1A	N. E. Bradbury	25A	E. Teller
2A	W. C. Bright	26A	" "
3A	S. W. Burriss	27A	" "
4A	J. C. Clark	28A	" "
5A	D. K. Froman	29A	" "
6A	R. W. Goranson	30A	J. von Neumann
7A	A. C. Graves	31A	J. A. Wheeler
8A	G. K. Hess	32A	Document Room
9A	M. G. Holloway	33A	" "
10A	E. R. Jette	34A	" "
11A	" " "	35A	" "
12A	J. M. B. Kellogg	36A	" "
13A	J. L. Tuck	37A	" "
14A	D. P. MacDougall	38A	" "
15A	" " "	39A	C. Longmire
16A	D. P. MacMillan	40A	R. W. Spence
17A	J. H. Manley	41A	A. C. Graves
18A	J. C. Mark	42A	R. C. Smith
19A	H. C. Paxton	43A	W. E. Ogle
20A	F. Reines	44A	E. Teller
21A	" "	45A	" "
22A	" "	46A	" "
23A	A. R. Sayer	47A	" "
24A	R. F. Taschek	48A	" "

UNCLASSIFIED

SECRET

SECRET ~~SECRET~~
UNCLASSIFIED

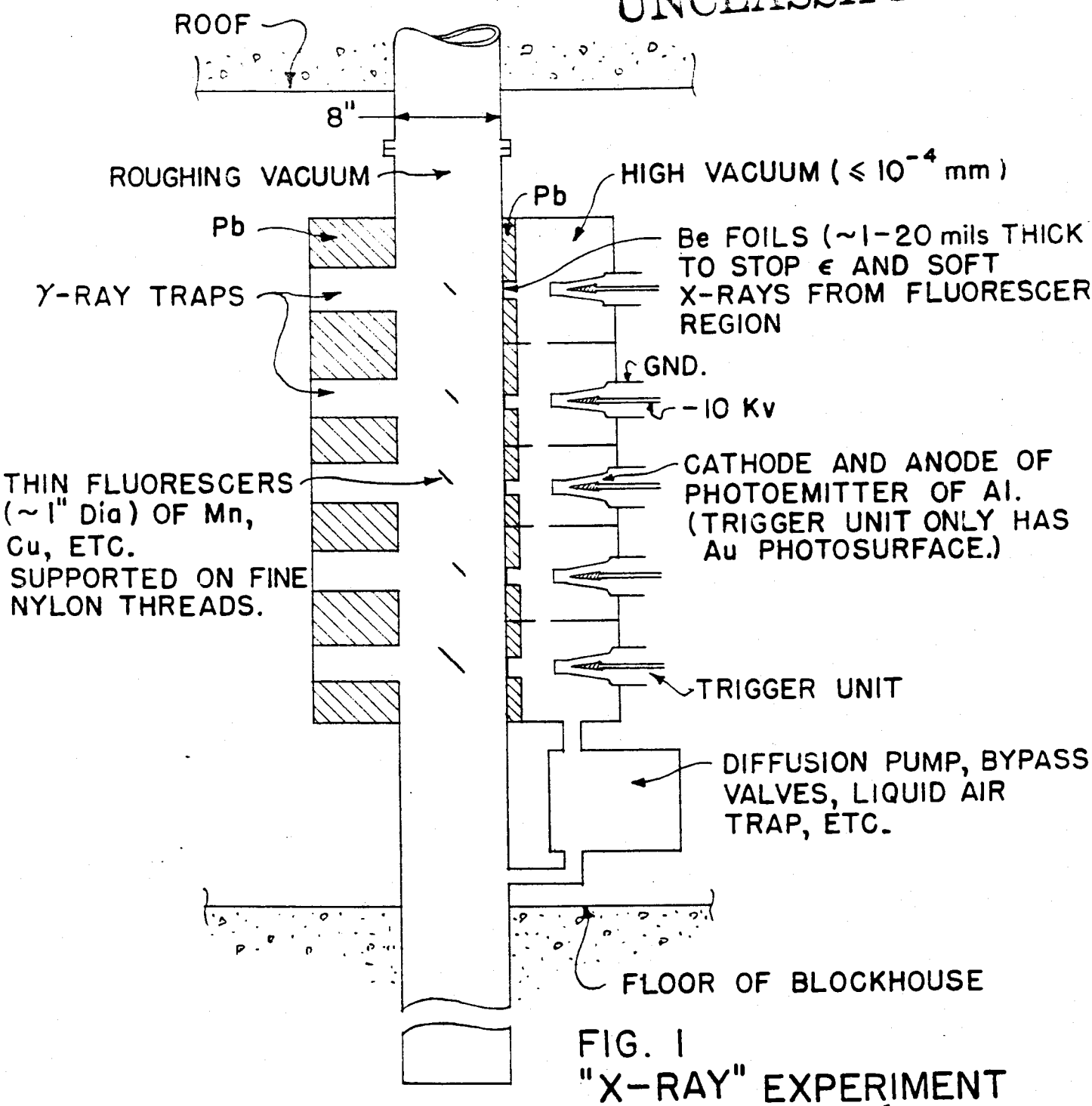

FIG. 1
"X-RAY" EXPERIMENT

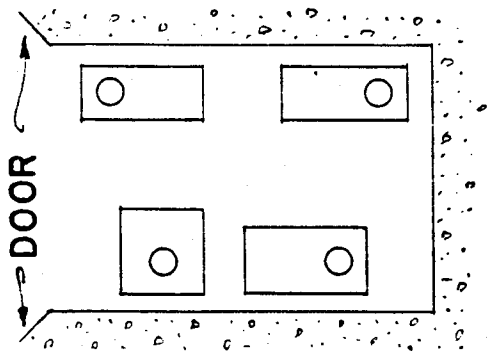

PLAN OF BLOCKHOUSE ARRANGEMENT

UNCLASSIFIED
SECRET

SECRET

UNCLASSIFIED

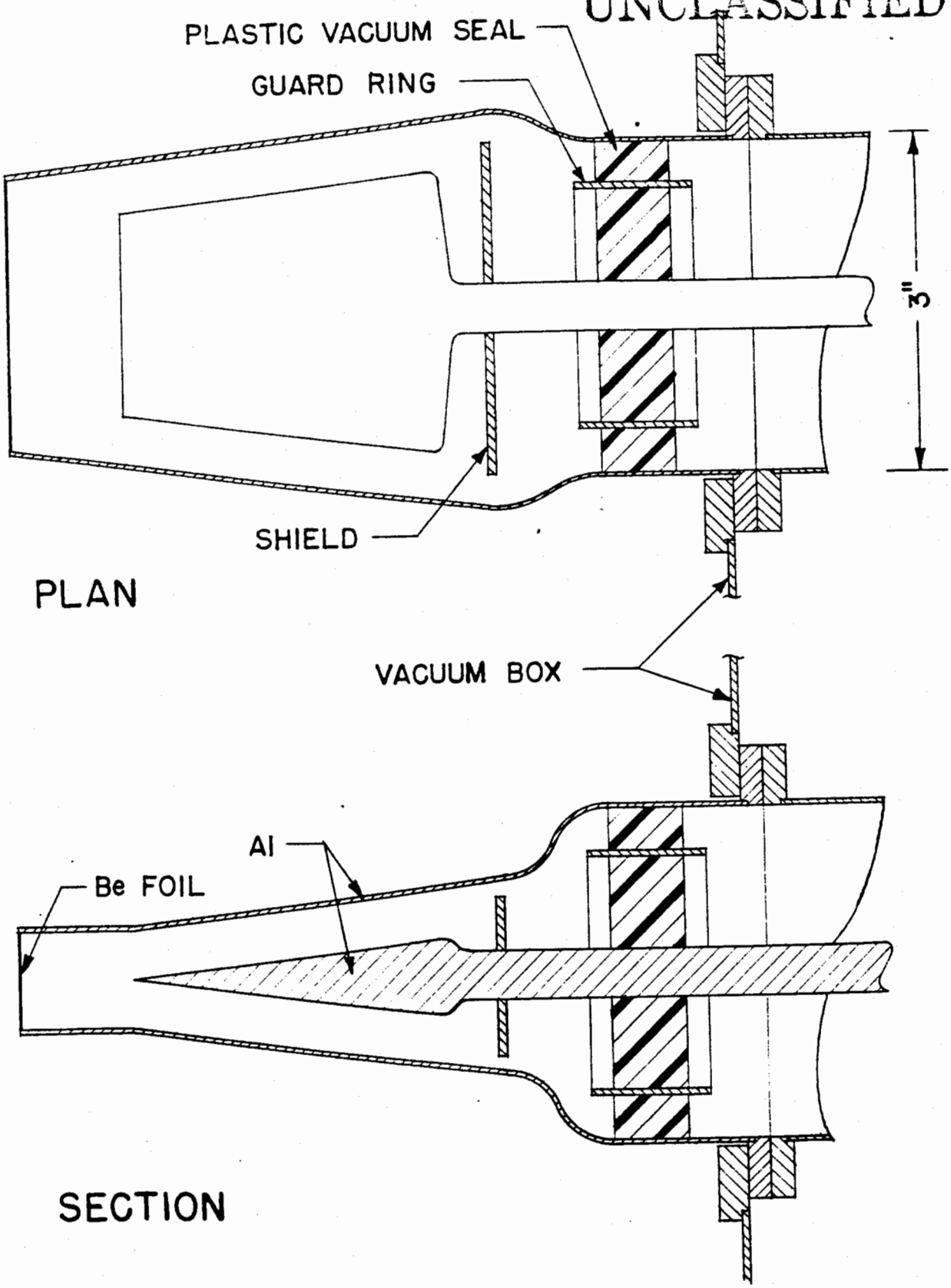

FIG. 2
"SHOVEL" DETECTOR

UNCLASSIFIED

SECRET