SECRET

This document consists of 18 pages.
No. 33 of 43 copies. Series A.

LAMD-323

UNCLASSIFIED

CAUTION
This document contains information affecting the National Defense of the United States. Its transmission or the disclosure of its contents in any manner to an unauthorized person is prohibited and may result in severe criminal penalties under applicable Federal laws.

ADWD-146

FAMILY COMMITTEE
Minutes of Twelfth Meeting
June 1, 1950

Corrections 5 ads on Page 5 6-8-50 L.C.

A. Attendance.

The twelfth meeting of the Family Committee was held Thursday, June 1, 1950 at 1:15 in Room B-117. Since the items on the agenda were not finished during this session, the Committee appointed a substantial subcommittee to continue in session throughout Friday, June 2 and Saturday morning, June 3. The entire Committee reassembled on Saturday, June 3 at 1:15 P.M. in Room B-117. The report rendered below is a composite of these sessions without regard to chronological order. Those present during the sessions were:

H. M. Agnew	J. M. Keller
H. V. Argo	E. Konopinski
N. E. Bradbury	D. P. MacDougall
H. Bradner	J. C. Mark
J. C. Clark	W. E. Ogle
F. de Hoffmann	F. Reines
D. K. Froman	L. B. Seely
R. W. Goranson	B. R. Suydam
A. C. Graves	R. F. Taschek
E. F. Hammel	E. Teller, Chairman
M. G. Holloway	J. A. Wheeler
E. R. Jette	H. F. York

B. Minutes of the Eleventh Meeting.

The Committee unanimously adopted the minutes of the Eleventh Meeting reported in ADWD-141, with the following corrections:

(1) On page 4, the third line from the bottom, the new sentence should start: "A time $\tau/2$....."

(2) On page 6, line 11, change the figure 60' to read 60".

C. General Problems Concerning X-ray Experiments.

Graves opened the discussion by presenting the Committee with a series of questions which had to be answered in the near future in order to proceed with the planning of the X-ray experiment. These questions were the following:

1. What spots are to be measured.

2. What quantities are to be measured and with what precision.
   (a) Is the radiation black body? i.e., what frequencies must we measure?
   (b) Time and temperature range for each spot.

DEPARTMENT OF ENERGY DECLASSIFICATION REVIEW
1ST REVIEW DATE: 03-30-90
AUTHORITY: ☐ ADC ☐ ADD
NAME: [illegible]
2ND REVIEW DATE: 7-17-97
AUTHORITY: ADD
NAME: [illegible]
DETERMINATION (CIRCLE NUMBER)
1. CLASSIFICATION RETAINED
2. CLASSIFICATION CHANGED TO:
3. CONTAINS NO DOE CLASSIFIED INFO
4. COORDINATE WITH:
5. CLASSIFICATION CANCELLED
6. CLASSIFIED INFO BRACKETED
7. OTHER (SPECIFY)

UNCLASSIFIED

RESTRICTED DATA
This document contains restricted data as defined in the Atomic Energy Act of 1946

3. Interpretation of data.

(a) Is there a pip in x-rays?

(b) [redacted]

(c) [redacted]

Bearing these typical questions in mind, the group proceeded to a discussion of separate items involved in the X-ray experiment. In the course of these, the above questions were answered in Sections D through F below; except for question 3(b).

[redacted] Rather, any results will be more in the nature of supporting arguments in answering such a question. [redacted]

DOE b(3)

[redacted]

DOE b(3)

(γ) Deviations of the temperature distribution from a black body spectrum.

(δ) Information concerning the high-energy x-rays emanating from the DT mixture when it goes.

D.

DOE

DOE b(3)

The problem that was considered was the radiation distribution in a slab of thickness S where the temperature at the inner surface is denoted by T_o and the temperature at the outer surface is denoted by T_o.

DOE b(3)

The other curve on Figure 1 shows the results of an equilibrium calculation.

DOE b(3)

It will be noted that this curve does not differ radically from the one for the first radiation breakthrough.

DOE b(3)

It should be noted that all the above calculations and formulas 1 and 2 are based on analytical fittings for the opacity data. These formulas have less accuracy than one can eventually hope for in these relations if one uses numerical integrations from the actual calculated opacity points that are now known.

DOE b(3)

It would, however, be desirable to have a "transparent spot" somewhere in the wall. Such a spot, which would be more transparent than the wall itself, would have the advantage that radiation would break through at an earlier stage. Thus, one could observe phenomena at an earlier time and moreover the original temperature distribution is not likely to be so distorted as that which comes through the main part of the wall at a slower rate. We shall return at a later time to a further discussion of one or more transparent spots.

It was agreed to refer this problem to a committee consisting of Konopinski, MacDougall and Taub, and to request them to report to the Family Committee what solution they have adopted.

DOE b(3)

DII. Number, Type and Location of Spots.

Teller reminded the Committee of the dual function of the X-ray experiment, to serve as

a. A diagnostic experiment.

DOE b(3)

b. An engineering experiment.

DOE b(3)

Point of view b should not be sold short. Taschek remarked that, on the other hand, point of view a would gain added weight if the experiment should turn out to be a failure and the DT would not go. As a matter of

UNCLASSIFIED

fact, design of experiments for the Spring '51 tests emphasizing point of view a would make it more likely that even if success were less certain, it would be valuable to hold the Spring '51 tests. Keeping these two functions of the X-ray experiment in mind, the Committee then examined what one could learn from measurements at different spots.

[redacted] it is recognized that it is difficult to tie down the absolute value of the number of x-rays observed, it was agreed that one most likely will have to rely on the shape of the spectrum to determine the temperature. For this reason it is advisable to straddle the maximum temperature. Hence the guiding principle was adopted that one would aim to record three points such that one point would be before the maximum temperature, one at about the maximum, and one beyond the maximum. [redacted] A given detector will measure x-rays of an energy, E_x, corresponding to a certain mean surface temperature, θ_o. The expected intensity range can be covered by providing for more detectors for the same point and by increasing the number of scopes. It is estimated that the safe range for a scope can not be taken larger than a factor of 5, and that a detector covers a range of about 25. Table I is a rough attempt to estimate the relative intensities for E_x at a given θ_o. The numbers marked by a star have arbitrarily been normalized to unity. The last two columns list the number of detectors (equals number of transmission cables) and the number of scopes.

In general, if there is a choice of adding a detector or adding a scope, the latter is preferable since the addition of a detector necessitates the addition of a transmission cable and the cost of a transmission cable is about six to seven times as high as that of a scope. There follows a detailed discussion of each E_x.

UNCLASSIFIED

[redacted] Hence a second scope has been added so that there is some possibility of detecting this distortion.

[redacted]

Because of the experimental difficulties involved, no detecting method chosen is likely to be fool-proof. Thus it would be advisable to have two parallel detecting methods employed (the particular ones favored at present are described in Section F below). Hence in order to buy this amount of insurance we must essentially double the number of detectors and scopes. Thus the total number of detectors is 10 and the total number of scopes 16. To this we must add three scopes for intercalibration of timing and one scope for a timing tie-in with other experiments such as DINEX. In addition, it would be valuable to run a blank detector and blank scope so that we finally end up with the following numbers: [redacted]

2. Transparent spot looking at DT. Such a transparent spot would yield diagnostic information directly. Super engineering information could be derived from it. [redacted] Such high energy radiation will have a comparatively long mean free path and some of it could pass directly from the DT through the transparent spot--which is the reason for aiming the spot at the DT. [redacted]

The possibility was examined that such a transparent spot would drain too much of the available energy. Calculations by Konopinski show that this is not the case and that the time required to drain a considerable portion of the energy would be very long compared to the times we are interested in. It was recalled, however, that future designs of the Super are likely to contain a mechanism for valving off excess radiation.

Construction of a table similar to Table I for the case of this transparent spot shows that except for the problem of detecting the very high-energy radiation, one is likely to get away with the use of 5 detectors and 8 scopes. As for the high-energy region it was estimated that 2 detectors and 3 scopes would cover some portion of the range.

An additional cause for worry in the high-energy region may be the production of x-rays from the DT reaction that have been scattered to the same energy as the x-rays which it is planned to measure. It is seen that if one accounts for the conventional extra scopes and detectors one arrives at 7 detectors and 14 scopes for this portion of the experiment.

It would be valuable to know this temperature. Thus it may be advisable to add extra scopes in order to obtain the shape of the spectrum of the very high-energy x-rays.

3. [redacted] Wheeler pointed out that in case the DT reaction was a fizzle there might be a distinct advantage for the diagnostic point of view if such a spot were examined for high energy x-rays for the sake of comparison with spot number 2. However, in view of the large number of extra detectors and scopes involved, as well as the inherent difficulty of adding a third spot with the associated evacuated x-ray tube, the Committee decided against the luxury of this third spot. It was agreed that if the Theoretical Division felt very strongly about the addition of a third spot they should raise this issue within three weeks.

From the above, it is seen that a choice has to be made between measuring only spot 1, only spot 2, or both spots with the associated possibilities concerning detecting equipment and "insurance". The Committee first examined whether it would be possible to reduce the number of observational spots to only one. [redacted] The view of another part of the group was expounded by Taschek who held that if only one spot were to be measured it should certainly be the transparent spot looking at the DT, since the latter would give diagnostic information of great value if the reaction should fizzle. Some of the Super engineering information could then be calculated from the diagnostic information. Taschek too expressed the strong preference for the idea of having both spots. In consequence, the Committee agreed that both spots should be instrumented. The possibility was raised of instrumenting the transparent spot only for the very high-energy measurements, thus saving some detectors and scopes. This view was rejected because it was felt that if the transparent spot were instrumented at all, the expenditure of effort in doing this would certainly warrant the additional expense of detectors and scopes for the extra information.

There was some discussion whether or not two detecting systems should be used on the transparent spot. [redacted] Because of the large amount of equipment involved, the idea of putting two detecting systems on both spots was not favored. It was agreed that the Family Committee as such would not decide where the extra detecting system should be placed.

[redacted] It should be pointed out that the above discussion concerning the frequency bands and amount of equipment needed was purely exploratory to indicate the magnitude of effort involved and that there is no intention to freeze on any of the figures stated. The magnitude of the effort is indicated by noting that a total of about 18 detectors and about 35 scopes will be involved. In this connection, Graves remarked that in view of the discussions, J Division is likely to freeze on an upper limit of about 40 scopes. York and Bradner agreed that beyond about 40 scopes the experimental effort would get very

unwieldy. Wheeler raised a word of caution and pointed out that there could very well be some important reason for adding scopes beyond this figure which may show up in the theoretical considerations now being pursued.

In connection with the physical arrangements of looking at the two spots, York pointed out that a one-centimeter radius would seem to be the very minimum so that the x-ray equipment has a sufficiently large area to look at. In fact, the experimentalists would hope that the spots could be arranged to be of considerably larger radius. As will become apparent in Section F below, it will be useful to have the evacuated pipes leading to the spots of as large a diameter as possib

DOE
b(3)

DIII. Time Scale and Shape of Scope Traces.

DO

The question arises of how late a time after this first signal any x-ray record would still be of interest

DOE
b(3

We are indeed interested, however, in times which occur after the DT mixture has burned because of engineering reasons.

DOE
b(3

At the present time it is very difficult to make any predictions about the shape of the scope traces to be expected, but just in order to get some very qualitative feeling a given set of possibilities was sketched.

DOE
b(3

This is a crude guess. It is not certain that the initial rise and the rise due to the thermonuclear reaction will be separated.

E. [redacted]

EI. Number, Type and Location of Spots.

The Committee reaffirmed the decision that the two spots specified in Section F of the 10th minutes of the Committee were to be chosen for the X-ray experiment. [redacted] It is evident that the major use for the measurement of the mockup spot is from the point of view of a diagnostic experiment. [redacted] Thus one might try to arrange this mockup spot in further designs in such a manner that it has as little of a covering surface as possible. However, this point is subject to further calculations and is not settled. [redacted]

EII. Time Scale of Scope Traces.

[redacted]

F. Detecting Schemes for X-rays and Experimental Problems.

Bradner and York reported that about 12 detecting schemes had been under active consideration in Berkeley. Of these, there are two which are currently favored, which are discussed below.

1. "Fluorescence" detecting scheme. Figure 2 shows a schematic view. It is seen that the incident x-rays fall on a given fluorescing target. Secondary x-rays are emitted and counted by phototube detectors. It has not yet been decided whether these detectors will be cathodes with no covering, thus measuring the secondary x-rays directly, or whether they will be covered with a fluorescer in order to increase their efficiency. In view of results obtained by the Stanford group showing that terphenyl has a response time as short as 2 or 3 x 10^{-9} seconds, it is likely that a fluorescer will be used because the smearing of the time signal will not be very worrisome.

2. "Thick K edge filter" detecting scheme. Figure 3 shows a schematic view. The incident beam goes through a thick K edge filter, thus eliminating a certain portion of the spectrum. The spectrum is then narrowed down even further by passing the beam emerging from the K filter through a low pass filter. This low pass filter consists of a series of parallel plates at a very small angle to the beam (or the order of 1:600). X-rays which strike

one of the plates are totally reflected and if they are of the right energy will be reflected another time from the adjoining plate so that they fall upon the detectors. Recent experimental information from Kirkpatrick at Stanford shows that it is experimentally feasible to manufacture such low pass filters.

Clark expressed a preference for methods on which more experimental information is already available. According to his view, a differential method with measurements behind several consecutive K edge filters might be preferable. While this method suffers from the fact that it relies on small differences of large intensities, it has the advantage of tying in closely with older laboratory methods. York and Bradner reported that this method had been considered and that their method number 2 is actually a modification of this idea.

[redacted]

[redacted] It was agreed that some adaptation of the scheme described in Figure 2 of the Tenth Meeting such that the x-ray pipe would be considerably wider would be acceptable. Figure 4 shows such a modified layout where the x-ray pipe is as wide as the spot to be examined.

[redacted] Rather accurate corrections for the radiation leakage can be applied as long as the gap is so small.

[redacted] It was agreed that this would be preferable from the point

of view of heat conduction and no objection was raised to it from the point of view of x-ray transmission. This question will be discussed on June 22. Figure 4 shows one pipe for the DT spot and a corresponding pipe to be provided for the mockup spot. This scheme could of course be modified to permit one very large pipe to cover both spots and to have it branch into two pipes several meters below the spots.

However, to date no experiments have been provided for to give information about such an incipient reaction.

Such a step would of course be investigated in the tests following those of the Spring '51.

DOE b(3)

DOE b(3)

DOE b(3)

G. Next Meeting.

The next meeting which is to take place on Thursday, June 8, will examine the Argo-Agnew report on neutron experiments. Agnew, Argo, Hall, King, Ogle, and Reines are to be invited to this meeting. A report on the Hippo calculations will be given.

Executive Secretary

UNCLASSIFIED

Distribution:

1A N. E. Bradbury
2A W. D. Bright
3A S. W. Burriss
4A J. C. Clark
5A D. K. Froman
6A R. W. Goranson
7A A. C. Graves
8A G. K. Hess
9A M. G. Holloway
10A E. R. Jette
11A " " "
12A J. M. B. Kellogg
13A E. Konopinski
14A D. P. MacDougall
15A " " "
16A D. P. MacMillan
17A J. H. Manley
18A J. C. Mark
19A H. C. Paxton
20A F. Reines
21A " "
22A " "
23A A. R. Sayer
24A R. F. Taschek
25A E. Teller
26A " "
27A " "
28A " "
29A " "
30A J. von Neumann
31A J. A. Wheeler
32A Document Room
33A " "
34A " "
35A " "
36A " "
37A " "
38A " "
39A J. M. Keller
40A R. W. Spence
41A A. C. Graves
42A R. C. Smith
43A W. E. Ogle

DOE
b(3)

Table I

UNCLASSIFIED

KEUFFEL & ESSER CO.

NO. 359-11. 10 × 10 to the half inch, 5th lines accented.
Engraving, 7 × 10 in.
MADE IN U.S.A.

DOE
b(3)

UNCLASSIFIED

[redacted]

UNCLASSIFIED

DOE
b(3)

UNCLASSIFIED

[redacted]

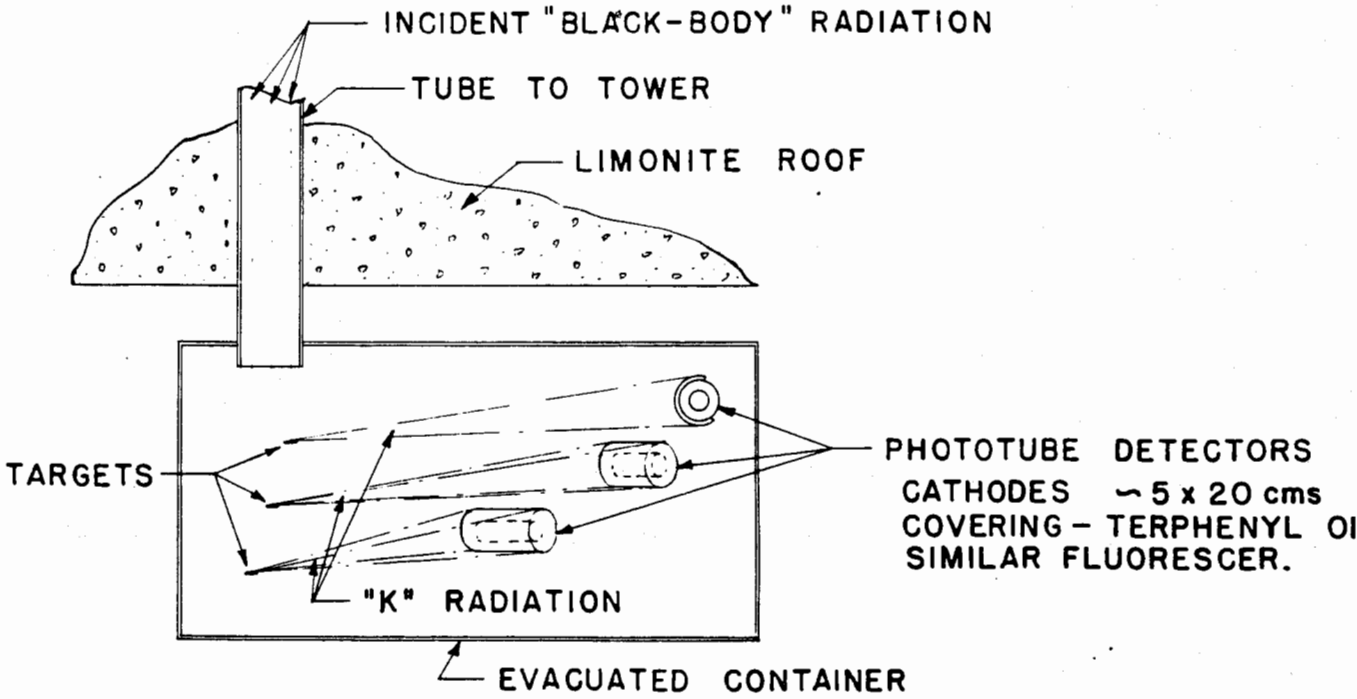

ELEVATION

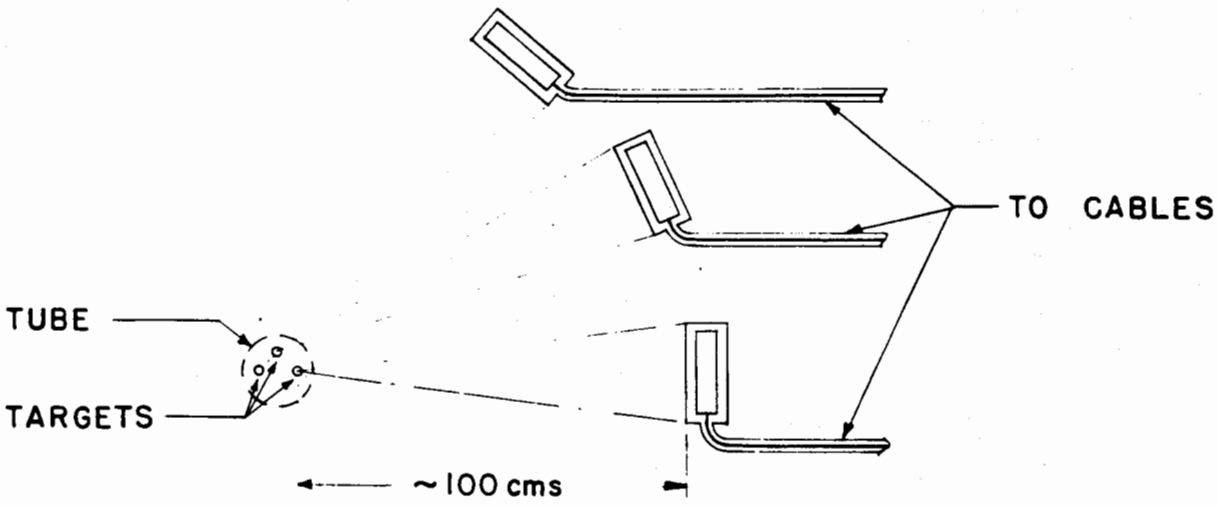

PLAN

FIG. 2
"FLUORESCENCE" DETECTING SCHEME

SECRET UNCLASSIFIED

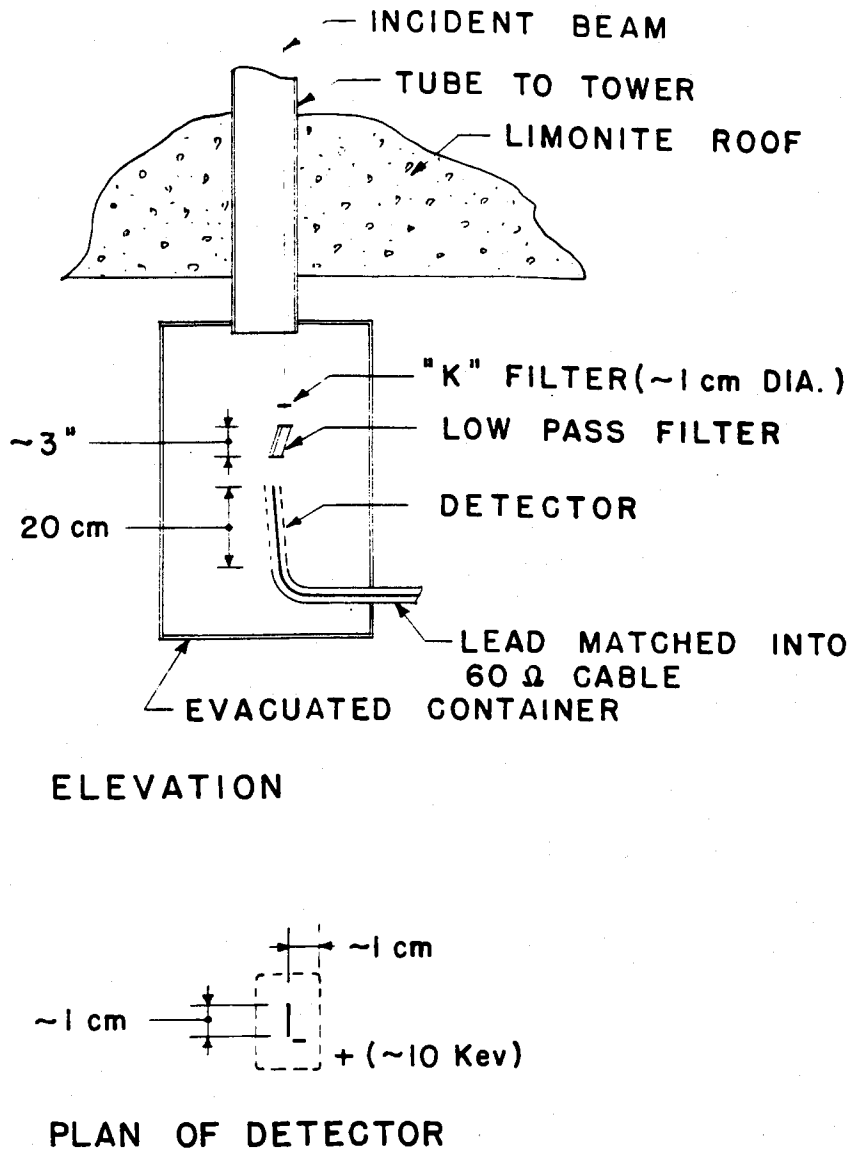

FIG. 3

"THICK K EDGE FILTER" DETECTING SCHEME

UNCLASSIFIED

SECRET