FMT-D1-INL

REVISIONS		
REV	DESCRIPTION	EFFECTIVE DATE:

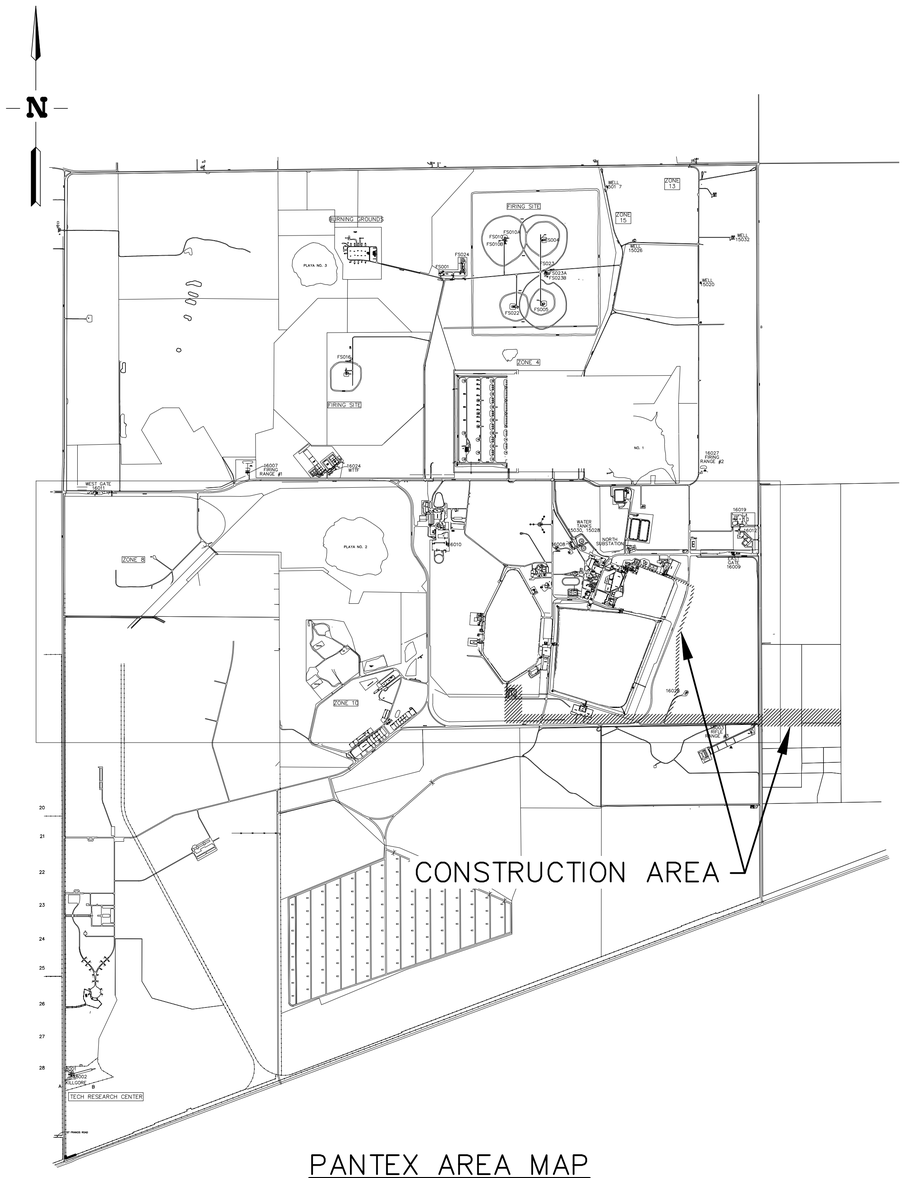

PANTEX AREA MAP
NTS

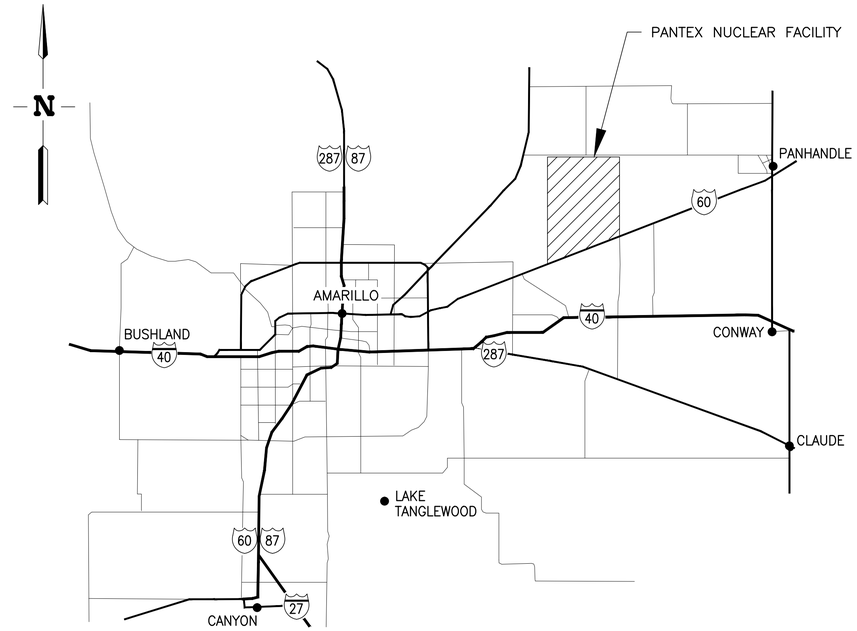

VICINITY MAP
NTS

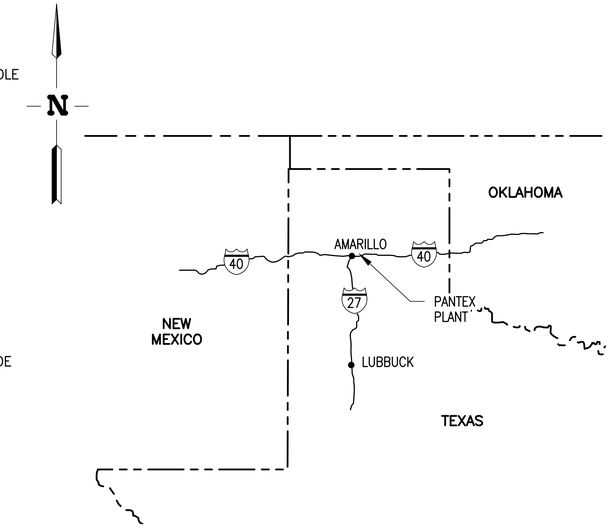

AREA MAP
NTS

DRAWING INDEX

PAGE NO.	DWG NO.	A-E SH NO.	REV	DRAWING TITLE
1	771255	T-1		AREA MAP, VICINITY MAP, PANTEX AREA MAP AND DRAWING INDEX
2	771256	C-1		PANTEX AREA PLAN
3	771257	C-2		INSTALLATION PLAN
4	771258	C-3		ENLARGED PLAN
5	771259	C-4		ENLARGED PLAN AND SECTIONS
6	771260	C-5		SECTIONS
7	771261	C-6		WIND TURBINE ELEVATIONS AND FOUNDATION ISOMETRIC VIEW
8	771262	C-7		ALTERNATE INSTALLATION PLAN
9	771263	E-1		ONE LINE DIAGRAM SH 1
10	771264	E-2		ONE LINE DIAGRAM SH 2
11	771265	E-3		ONE LINE DIAGRAM SH 3
12	771266	E-4		SYSTEM DIAGRAM
13	771267	E-5		SYSTEM CONTROL DIAGRAM
14	771268	E-6		SOUTH SUBSTATION INSTALLATION PLAN
15	771269	E-7		DUCT BANK SECTIONS
16	771270	E-8		SOUTH SUBSTATION GROUNDING PLAN
17	771271	E-9		WIND TURBINE PLANS, DETAILS AND SECTIONS

DRAWING INDEX–CONTINUED

PAGE NO.	DWG NO.	A-E SH NO.	REV	DRAWING TITLE
18	771272	E-10		JUNCTION BOX AND TRANSFORMER POWER CONNECTION DETAILS
19	771273	E-11		VFI SWITCH GROUNDING PLAN AND CONNECTION DETAIL
20	771274	E-12		SOUTH SUBSTATION DEAD END H STRUCTURE POLE DETAIL
21	771275	E-13		POWER POLE DETAILS
22	771276	E-14		POWER POLE DETAILS
23	771277	E-15		POWER POLE DETAIL AND PHOTOS
24	771278	E-16		FIBER OPTIC CABLE ROUTING PHOTOS
25	771279	E-17		POWER LINE MINIMUM CLEARANCE PHOTOS
26	771280	E-18		ALTERNATE ONE LINE DIAGRAM SH 3
27	771281	E-19		NEW SWITCHGEAR LOCATION PHOTOS (DRAWING NOT INCLUDED)

NOTE

1. THESE DRAWINGS TO BE USED IN CONJUNCTION WITH SPECIFICATION INL/MIS-10-19277 REV 1.

FOR DRAWING INDEX SEE DRAWING NO. 771255	REQUESTER: GD SEIFERT
	RESP ENGR: KS MYERS
NO SCALE	DESIGN: KS MYERS
	DRAWN: KL SPARROW
	PROJECT NO. NA
	SPCL CODE NA
	FOR REVIEW/APPROVAL SIGNATURES SEE ECR NO. 584228
DESIGN PHASE: AFC	EFFECTIVE DATE: 10/4/2010

Idaho National Laboratory

PANTEX
WIND FARM PROJECT

AREA MAP, VICINITY MAP, PANTEX AREA MAP AND DRAWING INDEX

SIZE	CAGE CODE	INDEX CODE NUMBER				DWG NO.	REV
		AREA	TYPE	CL	ORIG		
D	01MF3	540	0100	01	081	771255	

SCALE: NONE SHEET T-1

File: 771255.dwg
Path: J:\Work for others\Pantex
Layout Name: Layout1
Date: 10/01/10 – 3:27 P.M.
ID: KEN

FMT-D1-INL

REVISIONS		
REV	DESCRIPTION	EFFECTIVE DATE:

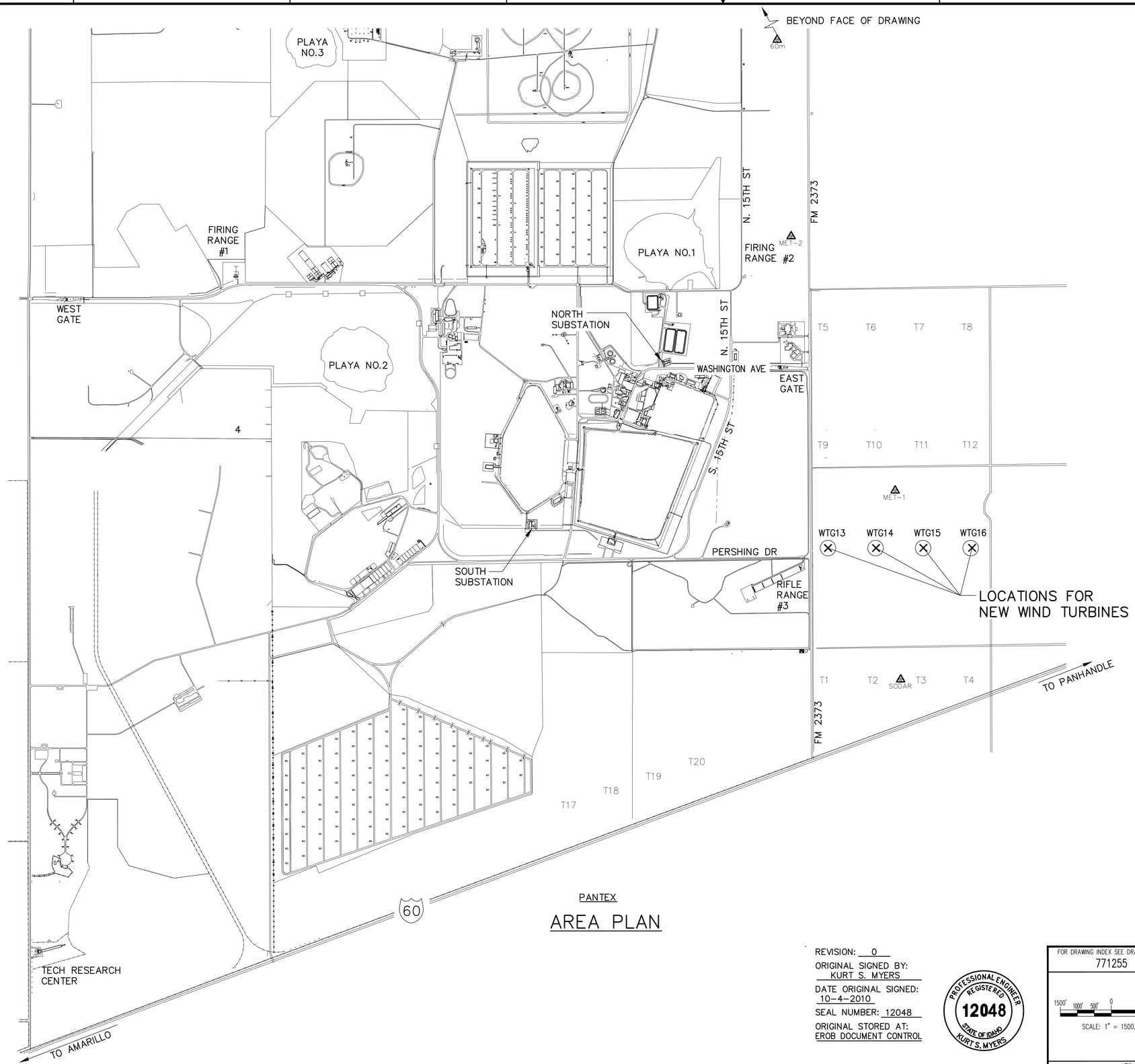

PANTEX

AREA PLAN

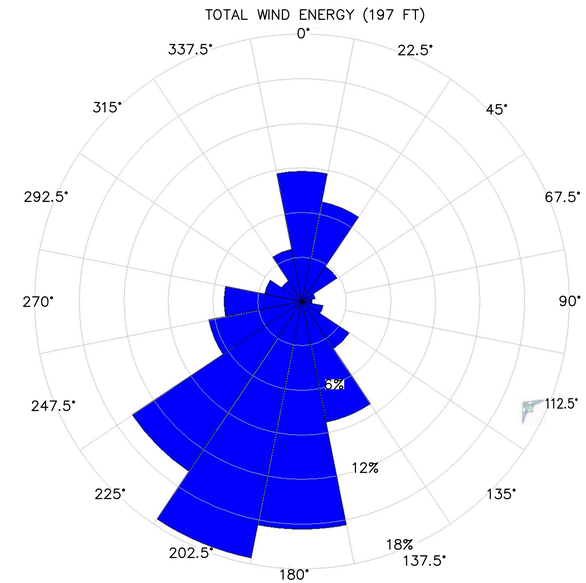

PANTEX WINDROSE DATA

COORDINATE TABLE				
NO.	NORTHING	EASTING	ELEVATION	DESCRIPTOR
1	N 3,755,330.89	E 644,411.93		NEW WIND TURBINE WTG13
2	N 3,755,330.89	E 645,811.93		NEW WIND TURBINE WTG14
3	N 3,755,330.89	E 647,211.93		NEW WIND TURBINE WTG15
4	N 3,755,330.89	E 648,611.93		NEW WIND TURBINE WTG16
5	N 3,757,021.59	E 646,387.50		EXISTING MET-1 DATA TOWER *
6	N 3,764,504.27	E 643,324.41		EXISTING MET-2 DATA TOWER *
7	N 3,751,460.98	E 646,551.44		EXISTING SODAR DATA TOWER *
8	N 3,773,199.58	E 642,085.77		EXISTING 60m DATA TOWER *

* DATA TOWER COORDINATES ARE APPROXIMATE

LEGEND

XXX — EXISTING WIND DATA TOWER

DATUMS

HORIZONTAL COORDINATE DATUM: NAD 1983, TEXAS NORTH

VERTICAL ELEVATION DATUM: NAVD 1988

REVISION: 0

ORIGINAL SIGNED BY: KURT S. MYERS

DATE ORIGINAL SIGNED: 10-4-2010

SEAL NUMBER: 12048

ORIGINAL STORED AT: EROB DOCUMENT CONTROL

PROFESSIONAL ENGINEER REGISTERED 12048 STATE OF IDAHO KURT S. MYERS

FOR DRAWING INDEX SEE DRAWING NO. 771255

1500' 1000' 500' 0 1500'

SCALE: 1" = 1500.0'

DESIGN PHASE: AFC

REQUESTER: GD SEIFERT
RESP ENGR: KS MYERS
DESIGN: KS MYERS
DRAWN: CA BEHM
PROJECT NO. NA
SPCL CODE NA
FOR REVIEW/APPROVAL SIGNATURES SEE ECR NO. 584228
EFFECTIVE DATE: 10/4/2010

Idaho National Laboratory

PANTEX
WIND FARM PROJECT

PANTEX AREA PLAN

SIZE	CAGE CODE	INDEX CODE NUMBER				DWG NO.	REV
		AREA	TYPE	CL	ORIG.		
D	01MF3	540	0100	01	081	771256	

SCALE: 1" = 1500.0' SHEET C-1

Layout Name: C-1 Pantex site
Date: 10/01/10 - 3:25 P.M.
By: KEN

File: 771256.dwg
Path: J:\Work for others\Pantex

FMT-D1-INL

REVISIONS		
REV	DESCRIPTION	EFFECTIVE DATE:

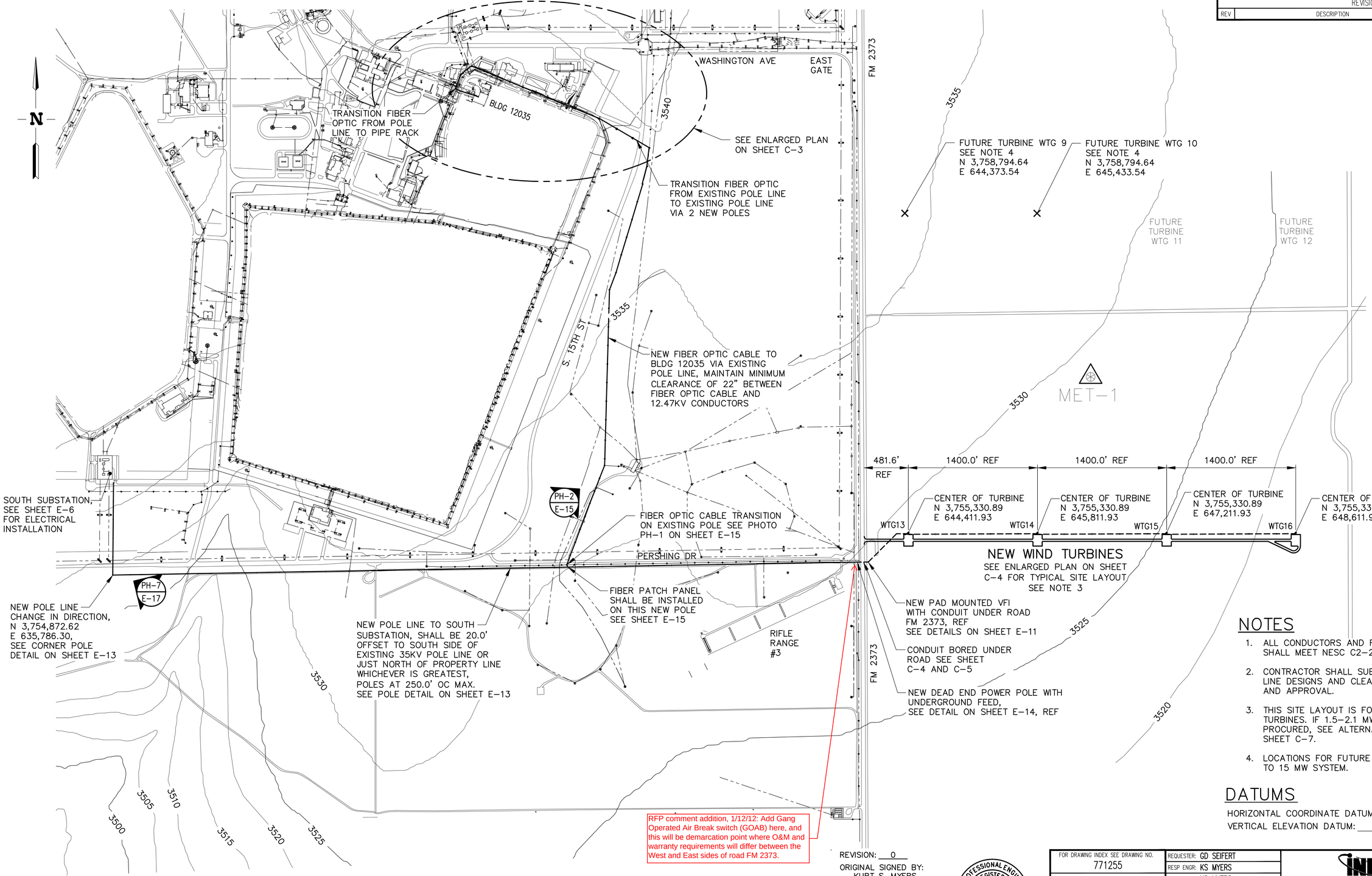

RFP comment addition, 1/12/12: Add Gang Operated Air Break switch (GOAB) here, and this will be demarcation point where O&M and warranty requirements will differ between the West and East sides of road FM 2373.

INSTALLATION PLAN

CONTOUR INTERVAL = 5.0'

NOTES

1. ALL CONDUCTORS AND FIBER OPTIC CABLES SHALL MEET NESC C2-2007 REQUIREMENTS.
2. CONTRACTOR SHALL SUBMIT ALL FINAL POWER LINE DESIGNS AND CLEARANCES FOR REVIEW AND APPROVAL.
3. THIS SITE LAYOUT IS FOR 2.3-3.0 MW TURBINES. IF 1.5-2.1 MW TURBINES ARE PROCURED, SEE ALTERNATE CONFIGURATION ON SHEET C-7.
4. LOCATIONS FOR FUTURE TURBINES IF EXPANDED TO 15 MW SYSTEM.

DATUMS

HORIZONTAL COORDINATE DATUM: NAD 1983, TEXAS NORTH

VERTICAL ELEVATION DATUM: NAVD 1988

REVISION: 0

ORIGINAL SIGNED BY: KURT S. MYERS

DATE ORIGINAL SIGNED: 10-4-2010

SEAL NUMBER: 12048

ORIGINAL STORED AT: EROB DOCUMENT CONTROL

PROFESSIONAL ENGINEER REGISTERED 12048 STATE OF IDAHO KURT S. MYERS

INDEX CODE NUMBER			
AREA	TYPE	CL	ORIG
540	0400	10	081

FOR DRAWING INDEX SEE DRAWING NO. 771255

500' 400' 300' 200' 100' 0 500'

SCALE: 1" = 500.0'

DESIGN PHASE: AFC

REQUESTER:	GD SEIFERT
RESP ENGR:	KS MYERS
DESIGN:	KS MYERS
DRAWN:	CA BEHM
PROJECT NO.	NA
SPCL CODE	NA
FOR REVIEW/APPROVAL SIGNATURES SEE ECR NO.	584228
EFFECTIVE DATE:	10/4/2010

Idaho National Laboratory

PANTEX
WIND FARM PROJECT

INSTALLATION PLAN

SIZE	CAGE CODE	INDEX CODE NUMBER				DWG NO.	REV
		AREA	TYPE	CL	ORIG		
D	01MF3	540	0100	01	081	771257	

SCALE: 1" = 500.0' SHEET C-2

File: 771257.dwg
Path: J:\Work for others\Pantex
Layout Name: C-2 SITE PLAN
Date: 10/01/10 - 3:24 P.M.
By: KEN

FMT-D1-INL

REVISIONS		
REV	DESCRIPTION	EFFECTIVE DATE:

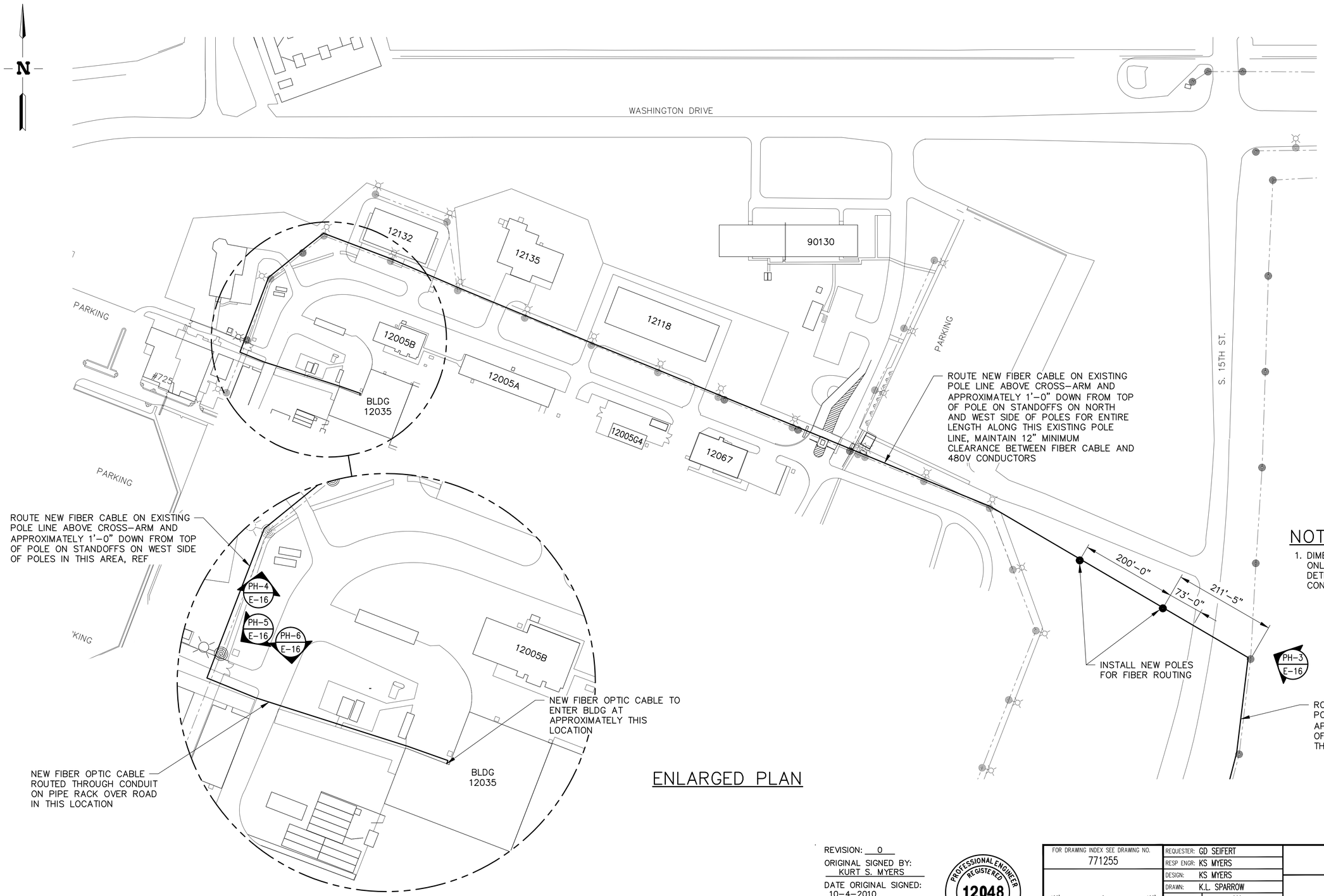

NOTE

1. DIMENSIONS ARE APPROXIMATE LOCATIONS ONLY. ACTUAL POLE LOCATION SHALL BE DETERMINED IN THE FIELD BY THE CONTRACTOR.

ENLARGED PLAN

REVISION: 0

ORIGINAL SIGNED BY: KURT S. MYERS

DATE ORIGINAL SIGNED: 10-4-2010

SEAL NUMBER: 12048

ORIGINAL STORED AT: EROB DOCUMENT CONTROL

PROFESSIONAL ENGINEER REGISTERED 12048 STATE OF IDAHO KURT S. MYERS

INDEX CODE NUMBER			
AREA	TYPE	CL	ORIG.
540	0400	10	081

FOR DRAWING INDEX SEE DRAWING NO. 771255

100' 50' 0 100'
SCALE: 1" = 100.0'

DESIGN PHASE: AFC

REQUESTER: GD SEIFERT
RESP ENGR: KS MYERS
DESIGN: KS MYERS
DRAWN: K.L. SPARROW
PROJECT NO.: NA
SPCL CODE: NA
FOR REVIEW/APPROVAL SIGNATURES SEE ECR NO. 584228
EFFECTIVE DATE: 10/4/2010

Idaho National Laboratory

PANTEX
WIND FARM PROJECT

ENLARGED PLAN

SIZE	CAGE CODE	INDEX CODE NUMBER				DWG NO.	REV
		AREA	TYPE	CL	ORIG.		
D	01MF3	540	0100	01	081	771258	

SCALE: 1" = 100.0' SHEET C-3

Layout Name: C-3
Date: 10/01/10 - 3:23 P.M.
By: KEN

File: 771258.dwg
Path: J:\Work for others\Pantex

REVISIONS		
REV	DESCRIPTION	EFFECTIVE DATE:

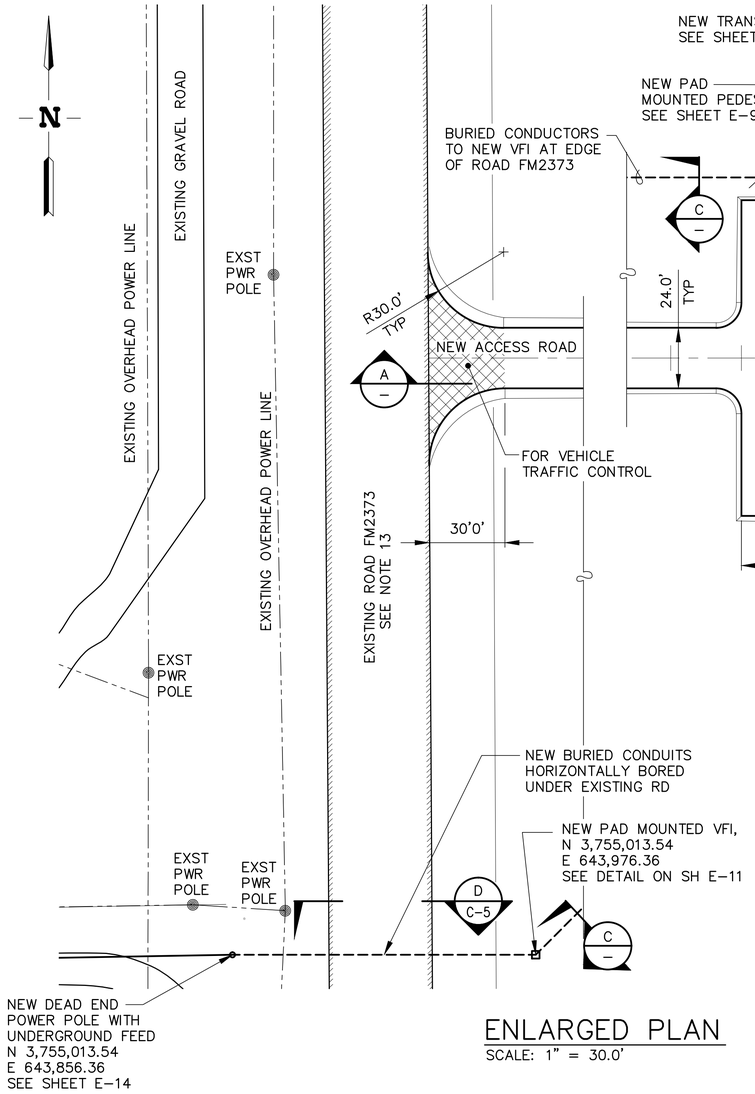

ENLARGED PLAN

SCALE: 1" = 30.0'

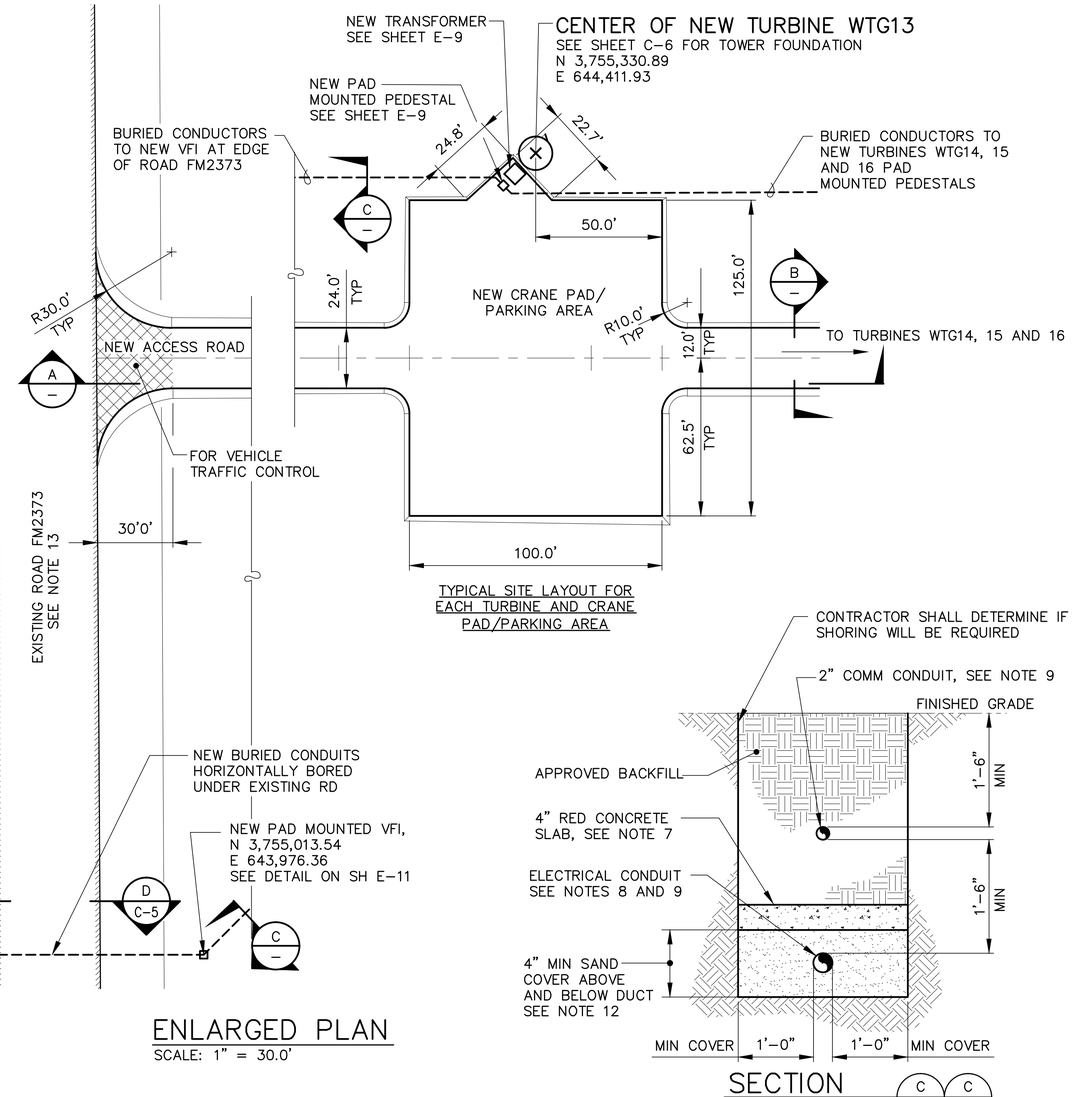

TYPICAL SITE LAYOUT FOR EACH TURBINE AND CRANE PAD/PARKING AREA

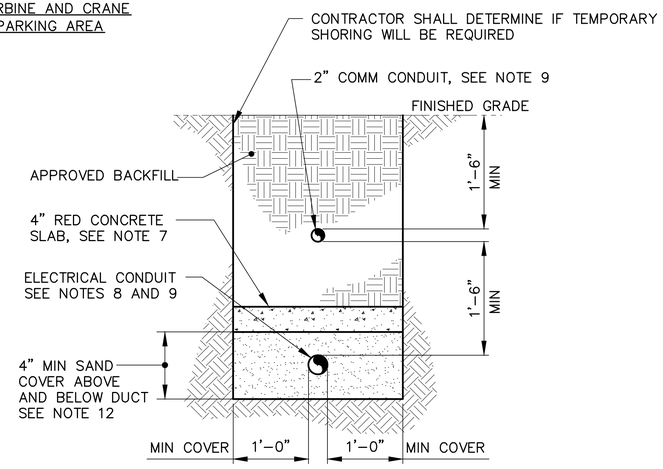

SECTION

SCALE: 1"=1.0' (C / E-9)

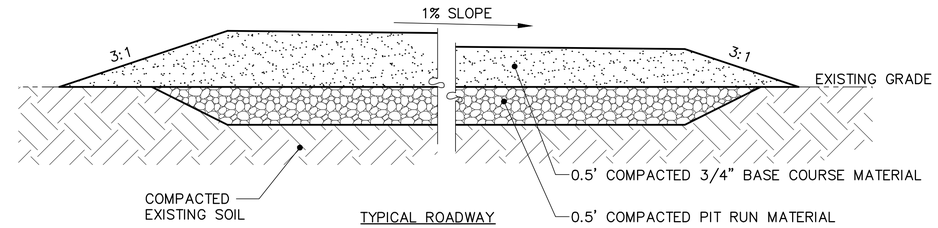

TYPICAL ROADWAY

SECTION

SCALE: 1" = 1.0' (B)

NOTES

1. FIELD ROUTE AND LOCATE ALL POWER AND COMMUNICATION CONDUITS AND VAULTS/HANDHOLES. ROUTE AND LOCATE AS NECESSARY TO AVOID INTERFERENCES WITH EXISTING UTILITIES.
2. EXCAVATE 0.5' OF TOPSOIL FOR ROADS, PADS AND FOUNDATIONS AND STOCKPILE TO RECLAIM DISTURBED AREAS AFTER COMPLETION OF THE PROJECT.
3. PLACE 1.0' OF ONE INCH MAXIMUM CRUSHED AGGREGATE BASE ON PREPARED CRANE PAD/PARKING AREA SURFACE IN TWO 0.5' LIFTS. PLACE 0.5' OF ONE INCH MAXIMUM CRUSHED AGGREGATE BASE ON PREPARED ROADWAY.
4. PLACE TOPSOIL OVER ROADWAY FORESLOPES AND DISTURBED AREAS AND PREPARE FOR SEEDING.
5. FERTILIZE AND SEED TOPSOIL IN ACCORDANCE WITH SPECS.
6. IN EXCAVATED TRENCH, PLACE CONCRETE SLABS OVER DUCTS AS SHOWN IN SECTION C ON THIS SHEET, FORMS NOT REQUIRED. PROVIDE MINIMUM CLEARANCES SHOWN.
7. REBAR (#4 AT 12" MAX. EW) IN CONCRETE SLAB IS ONLY REQUIRED IN TRAFFIC AREAS BETWEEN WTG13 AND VFI SWITCH. PLACE REBAR A MINIMUM OF 10.0' OUTSIDE OF TRAVELWAY.
8. 5" DUCT IS 5 1/2" OD AND MUST BE TAKEN INTO CONSIDERATION FOR PROPER COVER AND CLEARANCE.
9. INSTALL GREENLEE TRUE TAPE IN ALL NEW CONDUITS.
10. CONTRACTOR SHALL FIELD VERIFY LOCATION/ROUTES OF ALL EXISTING UNDERGROUND UTILITIES PRIOR TO ANY EXCAVATION. BACK UP GROUND REQUIREMENTS TO MATCH NEC, IEC, AND WITH MANUFACTURERS RECOMMENDATIONS.
11. WHERE CABLES ARE INSTALLED IN TRAFFIC AREAS, SCHEDULE 80 PVC CONDUIT SHALL BE USED FOR BOTH COMMUNICATIONS AND POWER CABLES.
12. SAND SHALL BE CLEAN SAND, (USCS CLASSIFICATION SP, SW), FREE FROM DEBRIS, ORGANICS AND OTHER DELETERIOUS MATERIAL, CONSISTING OF MATERIAL WITH LESS THAN 10% RETAINED ON A NO. 10 (2.00mm) SIEVE, AND LESS THAN 5% PASSING THRU A NO. 200 (0.075 mm) SIEVE.
13. ALL ELECTRICAL WORK EAST OF ROAD FM2373 SHALL BE PERFORMED IN ACCORDANCE WITH THE 2008 NEC. ALL ELECTRICAL WORK WEST OF ROAD FM2373 SHALL BE PERFORMED IN ACCORDANCE WITH PANTEX DESIGN CRITERIA MANUAL (PDCM).

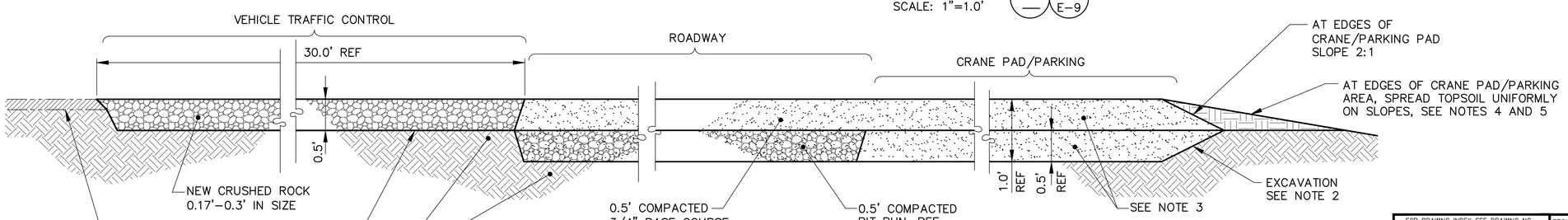

SECTION

SCALE: 1" = 1.0' (A)

DATUMS

HORIZONTAL COORDINATE DATUM: NAD 1983, TEXAS NORTH
VERTICAL ELEVATION DATUM: NAVD 1988

REVISION: 0
ORIGINAL SIGNED BY: KURT S. MYERS
DATE ORIGINAL SIGNED: 10-4-2010
SEAL NUMBER: 12048
ORIGINAL STORED AT: EROB DOCUMENT CONTROL

PROFESSIONAL ENGINEER REGISTERED 12048 STATE OF IDAHO KURT S. MYERS

FOR DRAWING INDEX SEE DRAWING NO.	771255
SCALE: 1" = 30.0'	
SCALE: 1" = 1'-0"	
DESIGN PHASE:	AFC
REQUESTER:	GD SEIFERT
RESP ENGR:	KS MYERS
DESIGN:	KS MYERS
DRAWN:	CA BEHM
PROJECT NO.	NA
SPCL CODE	NA
FOR REVIEW/APPROVAL SIGNATURES SEE ECR NO.	584228
EFFECTIVE DATE:	10/4/2010

Idaho National Laboratory

PANTEX
WIND FARM PROJECT

ENLARGED PLAN AND SECTIONS

SIZE	CAGE CODE	INDEX CODE NUMBER: AREA	TYPE	CL	ORIG	DWG NO.	REV
D	01MF3	540	0100	02	081	771259	

SCALE: NOTED
SHEET C-4

FMT-D1-INL

REVISIONS		
REV	DESCRIPTION	EFFECTIVE DATE:

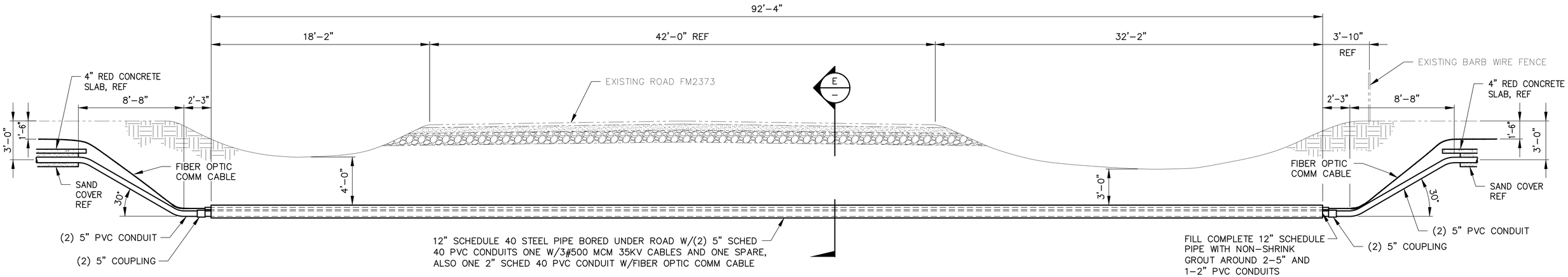

SECTION D / C-4
SCALE: 1/4" = 1'-0"

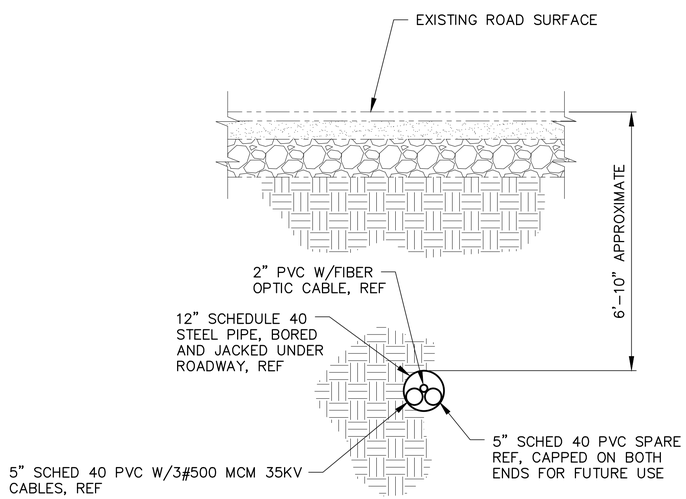

SECTION E / –
SCALE: 1/2" = 1'-0"

REVISION: 0
ORIGINAL SIGNED BY: KURT S. MYERS
DATE ORIGINAL SIGNED: 10-4-2010
SEAL NUMBER: 12048
ORIGINAL STORED AT: EROB DOCUMENT CONTROL

PROFESSIONAL ENGINEER REGISTERED 12048 STATE OF IDAHO KURT S. MYERS

FOR DRAWING INDEX SEE DRAWING NO. 771255

SCALE: 1/4" = 1'-0"
SCALE: 1/2" = 1'-0"

DESIGN PHASE: AFC

REQUESTER: GD SEIFERT
RESP ENGR: KS MYERS
DESIGN: KS MYERS
DRAWN: CA BEHM
PROJECT NO. NA
SPCL CODE NA
FOR REVIEW/APPROVAL SIGNATURES SEE EOR NO. 584228
EFFECTIVE DATE: 10/4/2010

Idaho National Laboratory

PANTEX
WIND FARM PROJECT

SECTIONS

SIZE	CAGE CODE	INDEX CODE NUMBER AREA	TYPE	G	ORIG	DWG NO.	REV
D	01MF3	540	0500	02	081	771260	

SCALE: NOTED
SHEET C-5

Layout Name: C-5
Date: 10/01/10 - 3:20 P.M.
By: KEN

File: 771260.dwg
Path: J:\Work for others\Pantex

REVISIONS		
REV	DESCRIPTION	EFFECTIVE DATE:

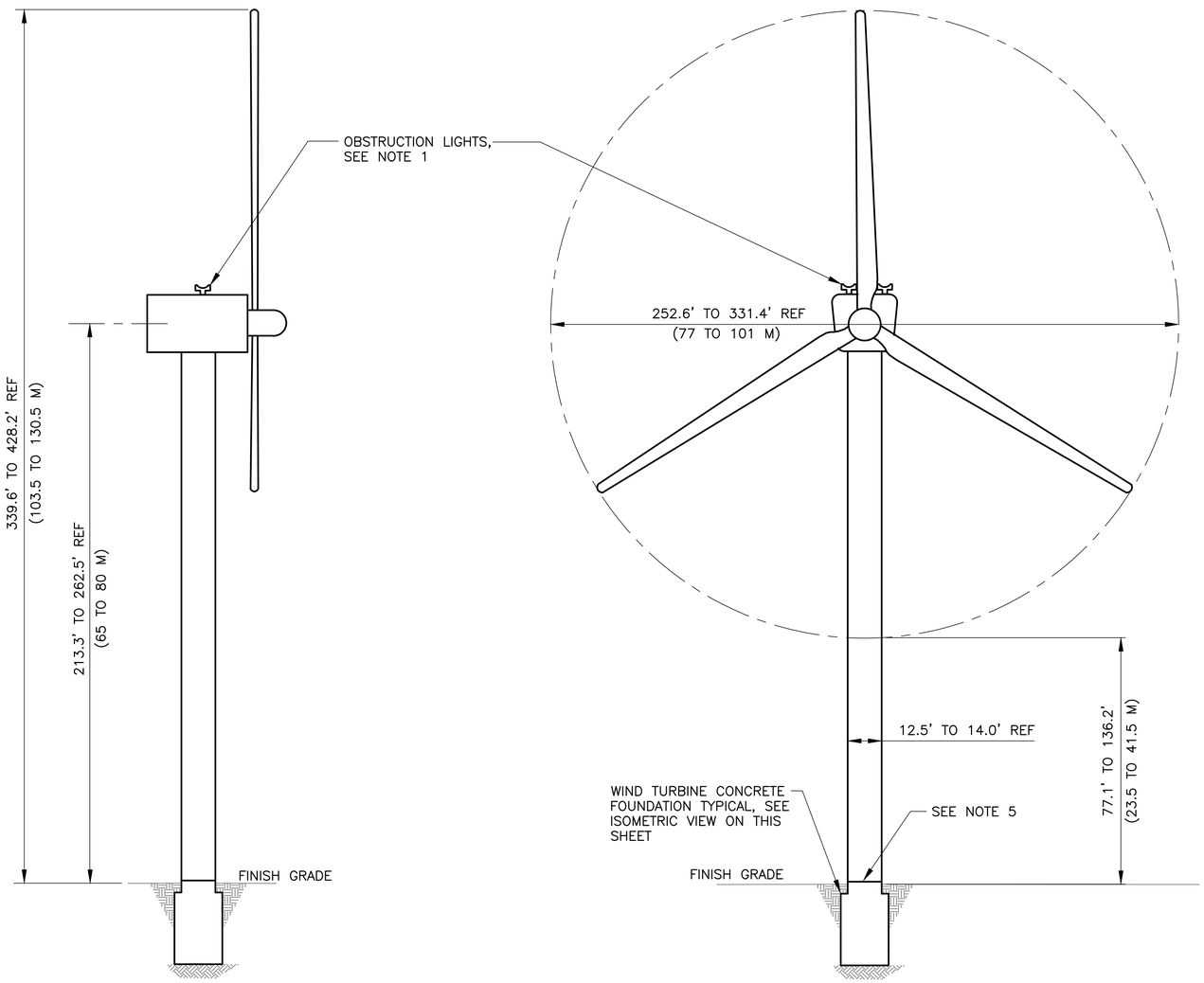

WIND TURBINE

ELEVATIONS

SCALE: 1"= 30.0'

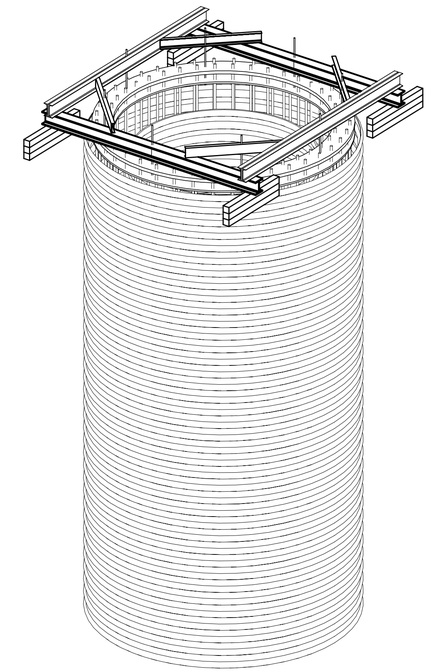

WIND TURBINE FOUNDATION OPTION, PATRICK AND HENDERSON OR APPROVED EQUAL

ISOMETRIC VIEW

NTS

NOTES

1. WIND TURBINE STRUCTURES SHALL BE LIGHTED BY MOUNTING TWO FLASHING BEACONS ON TOP OF THE GENERATOR HOUSING. BEACONS SHALL BE FAA L–864 MEDIUM INTENSITY FLASHING RED LIGHTS OR APPROVED EQUAL.
2. STANDARD TURBINE DESIGN PER TURBINE AND TOWER MANUFACTURER.
3. WIND TURBINE LOCATIONS AND FOUNDATION DETAILS WILL BE ADJUSTED TO ENSURE THAT TURBINE TIPS ARE UNDER THE DOCUMENTED FAA HEIGHT LIMITS FOR THE SITE.
4. IT IS THE CONTRACTORS RESPONSIBILITY TO SUBMIT THE APPROPRIATE FOUNDATION DESIGNS, DESIGN ANALYSIS AND INSTALLATION DETAILS REQUIRED FOR REVIEW AND APPROVAL BASED ON THE SUPPLIED WIND TURBINE.
5. FOUNDATION SHALL EXTEND A MINIMUM OF 1 FOOT ABOVE THE GROUND SURFACE. CROWN EXPOSED CONCRETE FOR DRAINAGE 1/8" PER/FT.
6. CONTRACTOR SHALL HAVE SOIL SAMPLING DONE FOR EACH WIND TURBINE LOCATION TO SUPPORT FINAL FOUNDATION DESIGN.

REVISION: 0
ORIGINAL SIGNED BY: KURT S. MYERS
DATE ORIGINAL SIGNED: 10–4–2010
SEAL NUMBER: 12048
ORIGINAL STORED AT: EROB DOCUMENT CONTROL

PROFESSIONAL ENGINEER REGISTERED 12048 STATE OF IDAHO KURT S. MYERS

FOR DRAWING INDEX SEE DRAWING NO.	771255
SCALE: 1" = 30.0'	
DESIGN PHASE:	AFC
REQUESTER:	GD SEIFERT
RESP ENGR:	KS MYERS
DESIGN:	KS MYERS
DRAWN:	KL SPARROW
PROJECT NO.	NA
SPCL CODE	NA
FOR REVIEW/APPROVAL SIGNATURES SEE ECR NO.	584228
EFFECTIVE DATE:	10/4/2010

Idaho National Laboratory

PANTEX
WIND FARM PROJECT

WIND TURBINE ELEVATIONS AND FOUNDATION ISOMETRIC VIEW

SIZE	CAGE CODE	INDEX CODE NUMBER				DWG NO.	REV
		AREA	TYPE	C	ORIG		
D	01MF3	540	0400	62	081	771261	
SCALE: NOTED						SHEET C–6	

FMT–D1–INL

File: 771261.dwg
Path: J:\Work for others\Pantex
Date: 10/01/10 – 3:18 P.M. Layout Name: Layout1
ID: KEN

FMT-D1-INL

REVISIONS		
REV	DESCRIPTION	EFFECTIVE DATE:

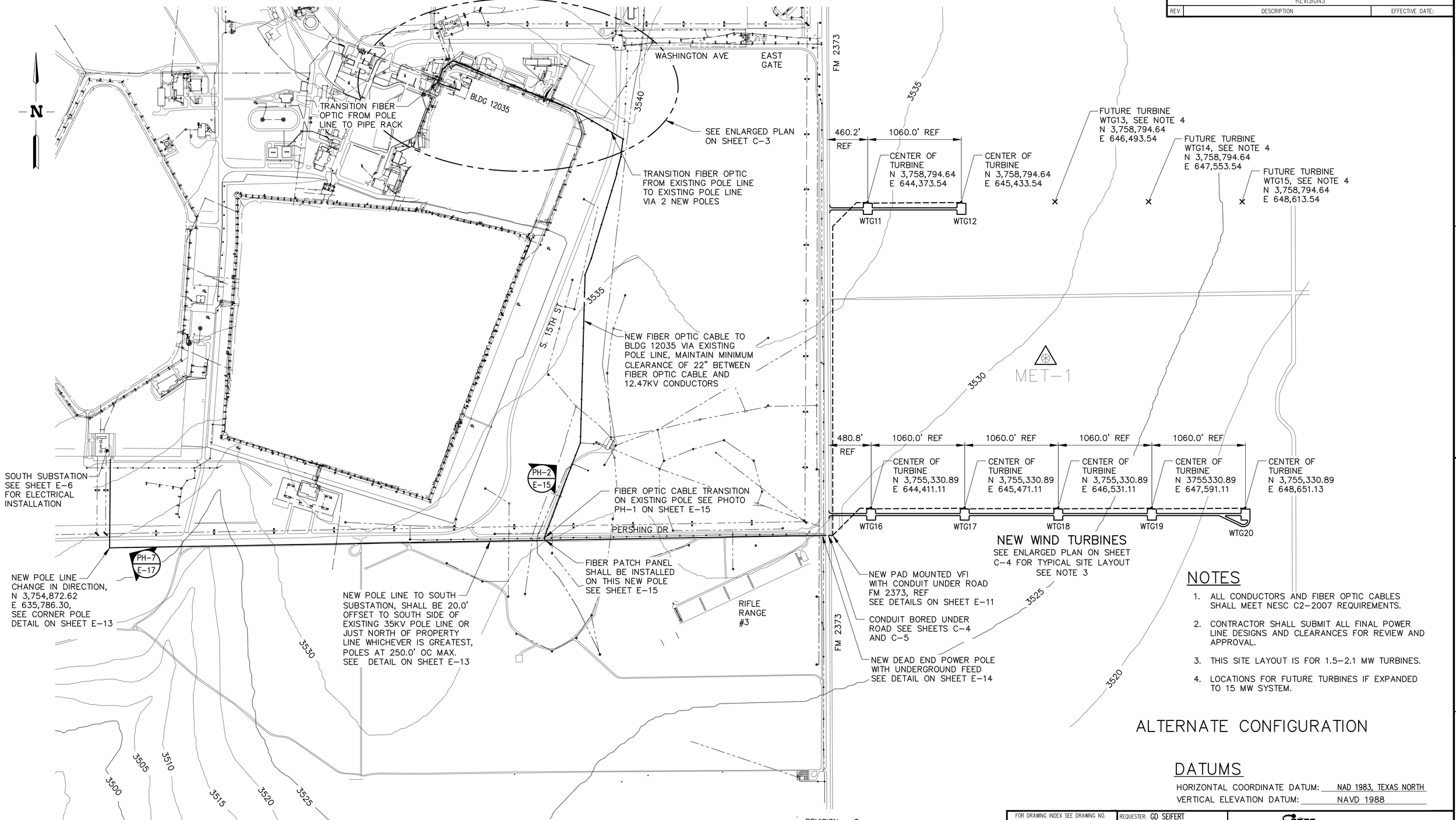

NOTES

1. ALL CONDUCTORS AND FIBER OPTIC CABLES SHALL MEET NESC C2-2007 REQUIREMENTS.
2. CONTRACTOR SHALL SUBMIT ALL FINAL POWER LINE DESIGNS AND CLEARANCES FOR REVIEW AND APPROVAL.
3. THIS SITE LAYOUT IS FOR 1.5-2.1 MW TURBINES.
4. LOCATIONS FOR FUTURE TURBINES IF EXPANDED TO 15 MW SYSTEM.

ALTERNATE CONFIGURATION

DATUMS

HORIZONTAL COORDINATE DATUM: NAD 1983, TEXAS NORTH
VERTICAL ELEVATION DATUM: NAVD 1988

ALTERNATE INSTALLATION PLAN

CONTOUR INTERVAL = 5.0'

REVISION: 0
ORIGINAL SIGNED BY: KURT S. MYERS
DATE ORIGINAL SIGNED: 10-4-2010
SEAL NUMBER: 12048
ORIGINAL STORED AT: EROB DOCUMENT CONTROL

PROFESSIONAL ENGINEER REGISTERED 12048 STATE OF IDAHO KURT S. MYERS

FOR DRAWING INDEX SEE DRAWING NO.	771255
500' 400' 300' 200' 100' 0 500' SCALE: 1" = 500.0'	
DESIGN PHASE:	AFC
REQUESTER:	GD SEIFERT
RESP ENGR:	KS MYERS
DESIGN:	KS MYERS
DRAWN:	CA BEHM
PROJECT NO.	NA
SPCL CODE	NA
FOR REVIEW/APPROVAL SIGNATURES SEE ECR NO.	584228
EFFECTIVE DATE:	10/4/2010

Idaho National Laboratory

PANTEX
WIND FARM PROJECT

ALTERNATE INSTALLATION PLAN

SIZE	CAGE CODE	INDEX CODE NUMBER: AREA	TYPE	G	ORIG	DWG NO.	REV
D	01MF3	540	0100	01	081	771262	

SCALE: 1" = 500.0' SHEET C-7

Layout Name: C-2 SITE PLAN Date: 10/01/10 - 3:17 P.M. User: KEN
File: 771262.dwg Path: J:\Work for others\Pantex

REVISIONS		
REV	DESCRIPTION	EFFECTIVE DATE:

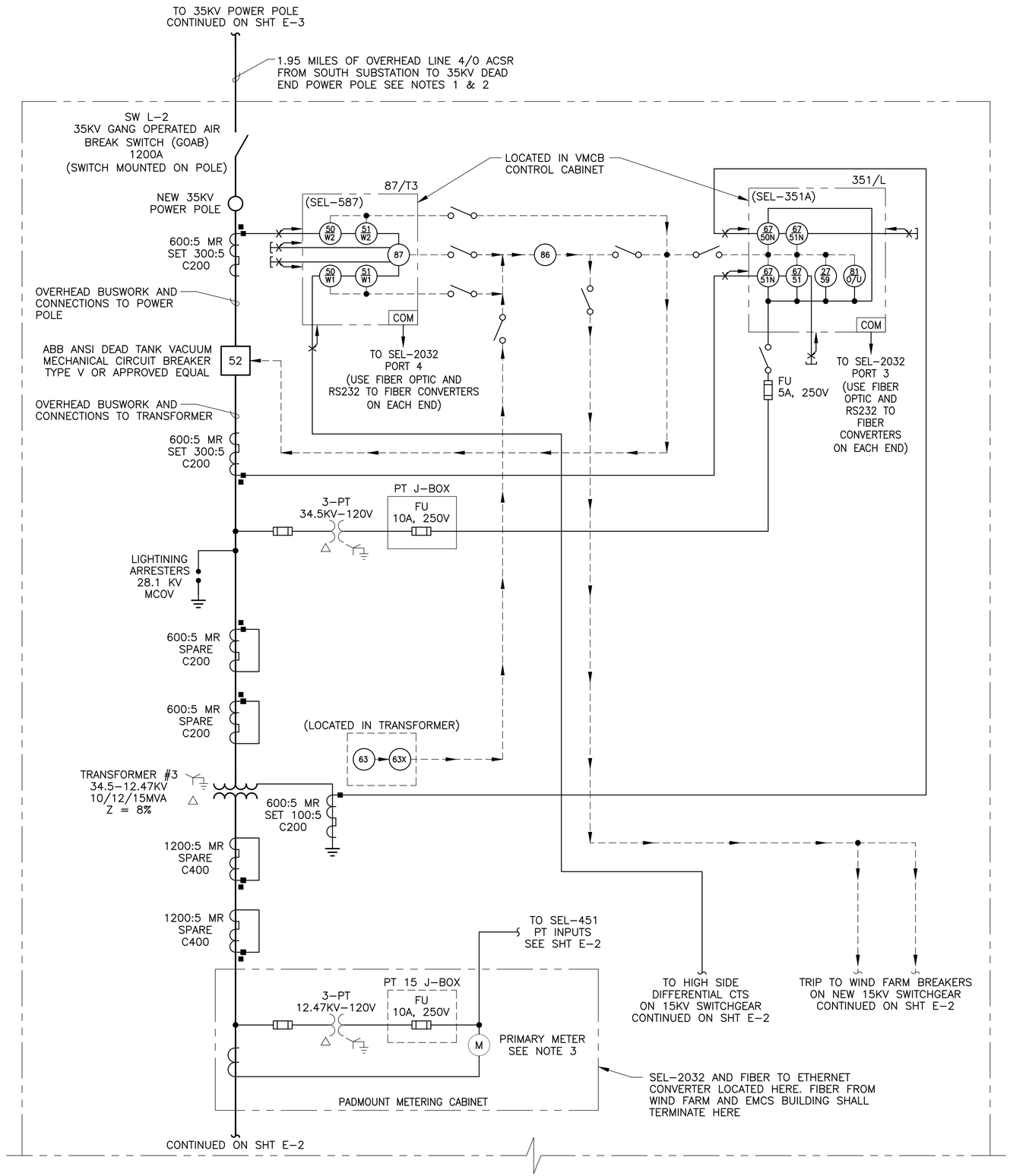

NOTES

1. TRANSMISSION LINE PARAMETER ESTIMATES:
   POSITIVE SEQUENCE:
   R = 0.442 OHMS/MILE X 1.95 MILES = 0.8819 OHMS
   X = 0.6649 OHMS/MILE X 1.95 MILES = 1.297 OHMS
   Xc = 0.15164 MOHMS-MILE/1.95 MILES = 0.07776 MOHMS
   ZERO SEQUENCE:
   R = 0.7262 OHMS/MILE X 1.95 MILES = 1.404 OHMS
   X = 2.9904 OHMS/MILE X 1.95 MILES = 5.831 OHMS
   Xc = 0.42413 MOHMS-MILE/1.95 MILES = 0.2175 OHMS

2. NEW 35KWV OVERHEAD LINE, #4/0 AWG ACSR (CODE NAME PENGUIN) 1.95 MILES BETWEEN WIND FARM AREA AND SOUTH SUBSTATION. WILL LIKELY USE "WISHBONE" TYPE OR STRAIGHT INSULATOR STANDOFF CONSTRUCTION, UNLESS PANTEX REQUIRES PROJECT TO FOLLOW A DIFFERENT TYPE OF CONSTRUCTION BASED ON UTILITY STANDARD SPECIFICATIONS.

3. PRIMARY METER IS A ELECTRO INDUSTRIES NEXUS 1262 BI-DIRECTIONAL REVENUE METER, OR APPROVED EQUAL.

4. ENSURE THAT NEW METERING CONTROL AND TRANSFORMER ENCLOSURES ARE LARGE ENOUGH TO HOUSE METERING EQUIPMENT, PT'S AND CT'S, COMMUNICATION CABLES AND EQUIPMENT, RELAYING, ETC AS NECESSARY.

5. CONTRACTOR SHALL WORK WITH PANTEX ENGINEERING THROUGH SUBMITTAL PROCESS FOR FINAL RELAY NUMBERING, NAMING AND LABELING CONVENTIONS/REQUIREMENTS.

REVISION: 0
ORIGINAL SIGNED BY: KURT S. MYERS
DATE ORIGINAL SIGNED: 10-4-2010
SEAL NUMBER: 12048
ORIGINAL STORED AT: EROB DOCUMENT CONTROL

PROFESSIONAL ENGINEER REGISTERED 12048 STATE OF IDAHO KURT S. MYERS

FOR DRAWING INDEX SEE DRAWING NO.	771255
NO SCALE	
DESIGN PHASE:	AFC
REQUESTER:	GD SEIFERT
RESP ENGR:	KS MYERS
DESIGN:	KS MYERS
DRAWN:	KL SPARROW
PROJECT NO.	NA
SPCL CODE	NA
FOR REVIEW/APPROVAL SIGNATURES SEE ECR NO.	584228
EFFECTIVE DATE:	10/4/2010

Idaho National Laboratory

PANTEX
WIND FARM PROJECT

ONE LINE DIAGRAM SH 1

SIZE	CAGE CODE	INDEX CODE NUMBER: AREA	TYPE	CL	ORIG	DWG NO.	REV
D	01MF3	540	0400	10	081	771263	

SCALE: NONE
SHEET E-1

FMT-D1-INL

REVISIONS		
REV	DESCRIPTION	EFFECTIVE DATE:

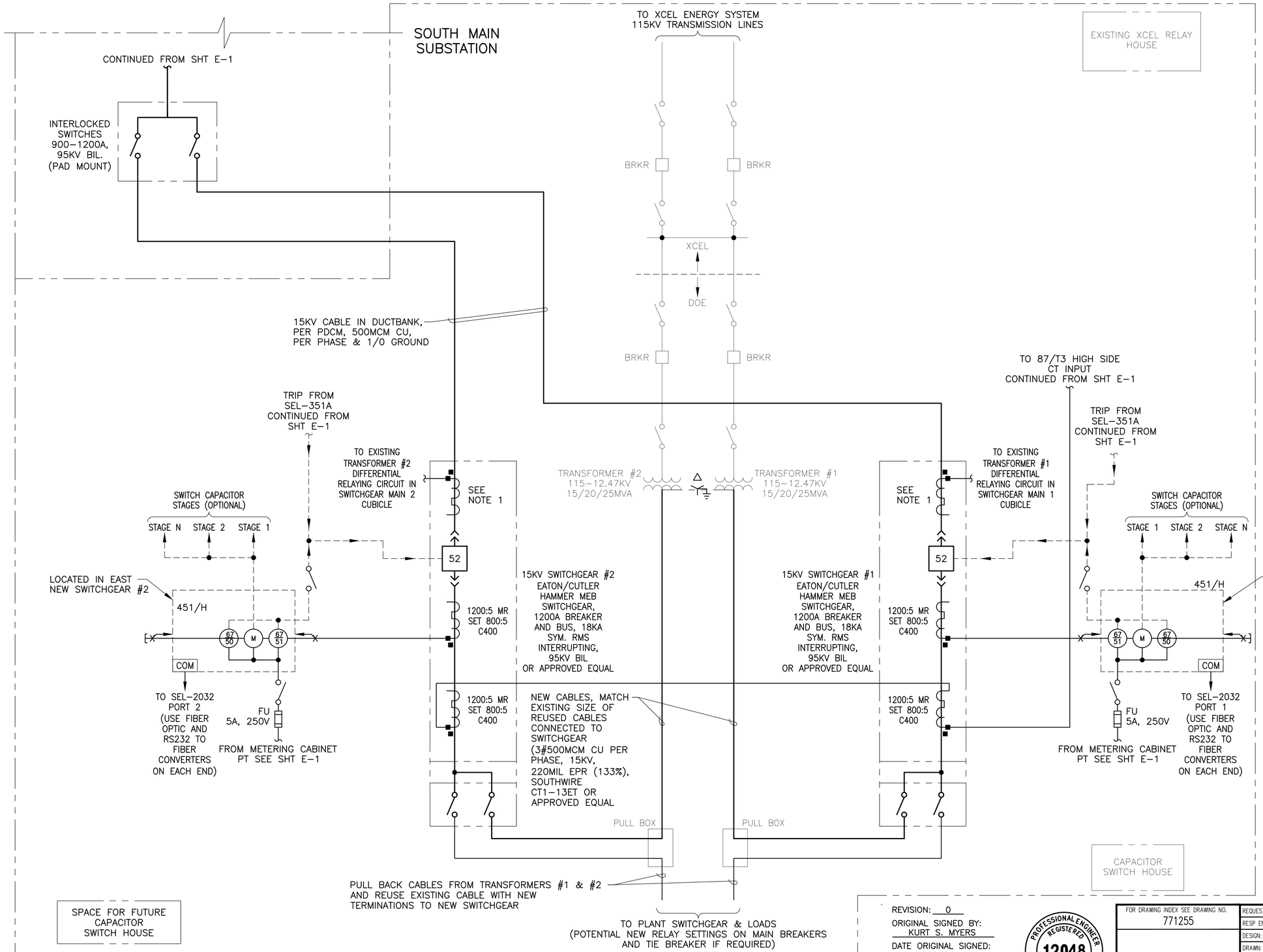

NOTES

1. MATCH EXISTING DIFFERENTIAL CIRCUIT CT RATIOS.
2. CONTRACTOR TO SUBMIT FINAL RELAY SETTINGS FOR APPROVAL.

REVISION: 0

ORIGINAL SIGNED BY: KURT S. MYERS

DATE ORIGINAL SIGNED: 10-4-2010

SEAL NUMBER: 12048

ORIGINAL STORED AT: EROB DOCUMENT CONTROL

PROFESSIONAL ENGINEER REGISTERED 12048 STATE OF IDAHO KURT S. MYERS

FOR DRAWING INDEX SEE DRAWING NO. 771255	REQUESTER: GD SEIFERT	Idaho National Laboratory
	RESP ENGR: KS MYERS	
	DESIGN: KS MYERS	PANTEX WIND FARM PROJECT
	DRAWN: KL SPARROW	
NO SCALE	PROJECT NO. NA	ONE LINE DIAGRAM SH 2
	SPCL CODE NA	
	FOR REVIEW/APPROVAL SIGNATURES SEE ECR NO. 584228	SIZE D · CAGE CODE 01MF3 · INDEX CODE NUMBER AREA 540 TYPE 0400 C 10 ORIG 081 · DWG NO. 771264 · REV
	EFFECTIVE DATE: 10/4/2010	SCALE: NONE · SHEET E-2
DESIGN PHASE: AFC		

Layout Name: Layout1
Date: 10/01/10 - 3:15 P.M.
ID: KEN

File: 771264.dwg
Path: J:\Work for others\Pantex

REVISIONS		
REV	DESCRIPTION	EFFECTIVE DATE:

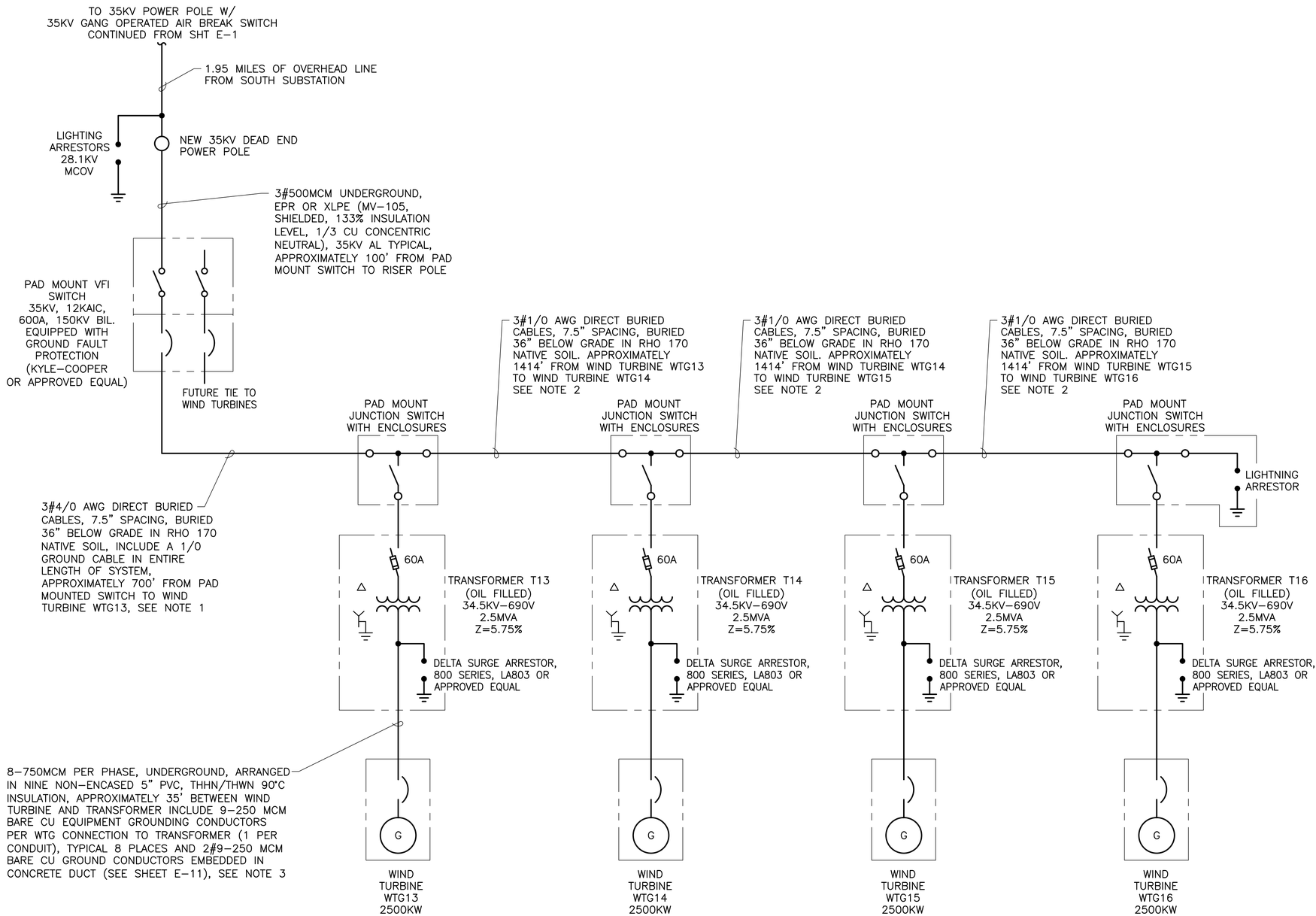

NOTES

1. #4/0 AWG AL CABLE PARAMETERS ARE:
   POSITIVE SEQUENCE:
   R=0.105 OHMS/1000 FT
   XI=0.041 OHMS/1000 FT
   ZERO SEQUENCE:
   R=0.1669 OHMS/1000 FT
   XI=0.1044 OHMS/1000 FT

   XC= 0.0346 MOHMS-1000 FT

   FOR #4/0 AWG AL CABLE RUNS, USE SHOWN CABLE LENGTHS TO CALCULATE THOSE IMPEDENCES BASED UPON TYPICAL VALUES SHOWN ABOVE

2. #1/0 AWG AL CABLE PARAMETERS ARE:
   POSITIVE SEQUENCE:
   R=0.21 OHMS/1000 FT
   XI=0.045 OHMS/1000 FT
   ZERO SEQUENCE:
   R=0.3339 OHMS/1000 FT
   XI=0.1145 OHMS/1000 FT

   XC= 0.0429 MOHMS-1000 FT

   FOR #1/0 AWG AL CABLE RUNS, USE SHOWN CABLE LENGTHS TO CALCULATE THOSE IMPEDENCES BASED UPON TYPICAL VALUES SHOWN ABOVE

3. 750MCM AL CABLE PARAMETERS ARE:
   R=0.02 OHMS/1000 FT
   XI=0.036 OHMS/1000 FT

   USE SHOWN CABLE LENGTHS TO CALCULATE THOSE IMPEDENCES BASED UPON TYPICAL VALUES SHOWN ABOVE, 7-750MCM CONDUCTORS PARALLEL PER PHASE.

4. INSTALLATION CONTRACTOR SHALL PERFORM FINAL CABLE SIZING AND GROUND GRID ADJUSTMENTS BASED ON SOIL SAMPLING RESULTS FOR THERMAL AND ELECTRICAL RESISTIVITY/CONDUCTIVITY.

5. THIS LAYOUT IS FOR 2.3-3.0 MW TURBINES. IF 1.5-2.1 MW TURBINES ARE PROCURED SEE ALTERNATE ONE LINE DIAGRAM ON SHEET E-18.

REVISION: 0
ORIGINAL SIGNED BY: KURT S. MYERS
DATE ORIGINAL SIGNED: 10-4-2010
SEAL NUMBER: 12048
ORIGINAL STORED AT: EROB DOCUMENT CONTROL

PROFESSIONAL ENGINEER REGISTERED 12048 STATE OF IDAHO KURT S. MYERS

FOR DRAWING INDEX SEE DRAWING NO. 771255	REQUESTER: GD SEIFERT	Idaho National Laboratory
	RESP ENGR: KS MYERS	PANTEX WIND FARM PROJECT
NO SCALE	DESIGN: KS MYERS	ONE LINE DIAGRAM SH 3
	DRAWN: KL SPARROW	
	PROJECT NO.: NA	
	SPCL CODE: NA	
	FOR REVIEW/APPROVAL SIGNATURES SEE ECR NO. 584228	
DESIGN PHASE: AFC	EFFECTIVE DATE: 10/4/2010	SIZE D · CAGE CODE 01MF3 · INDEX CODE NUMBER AREA 540 TYPE 0400 OL 10 ORIG 081 · DWG NO. 771265 · REV · SCALE: NONE · SHEET E-3

REVISIONS		
REV	DESCRIPTION	EFFECTIVE DATE:

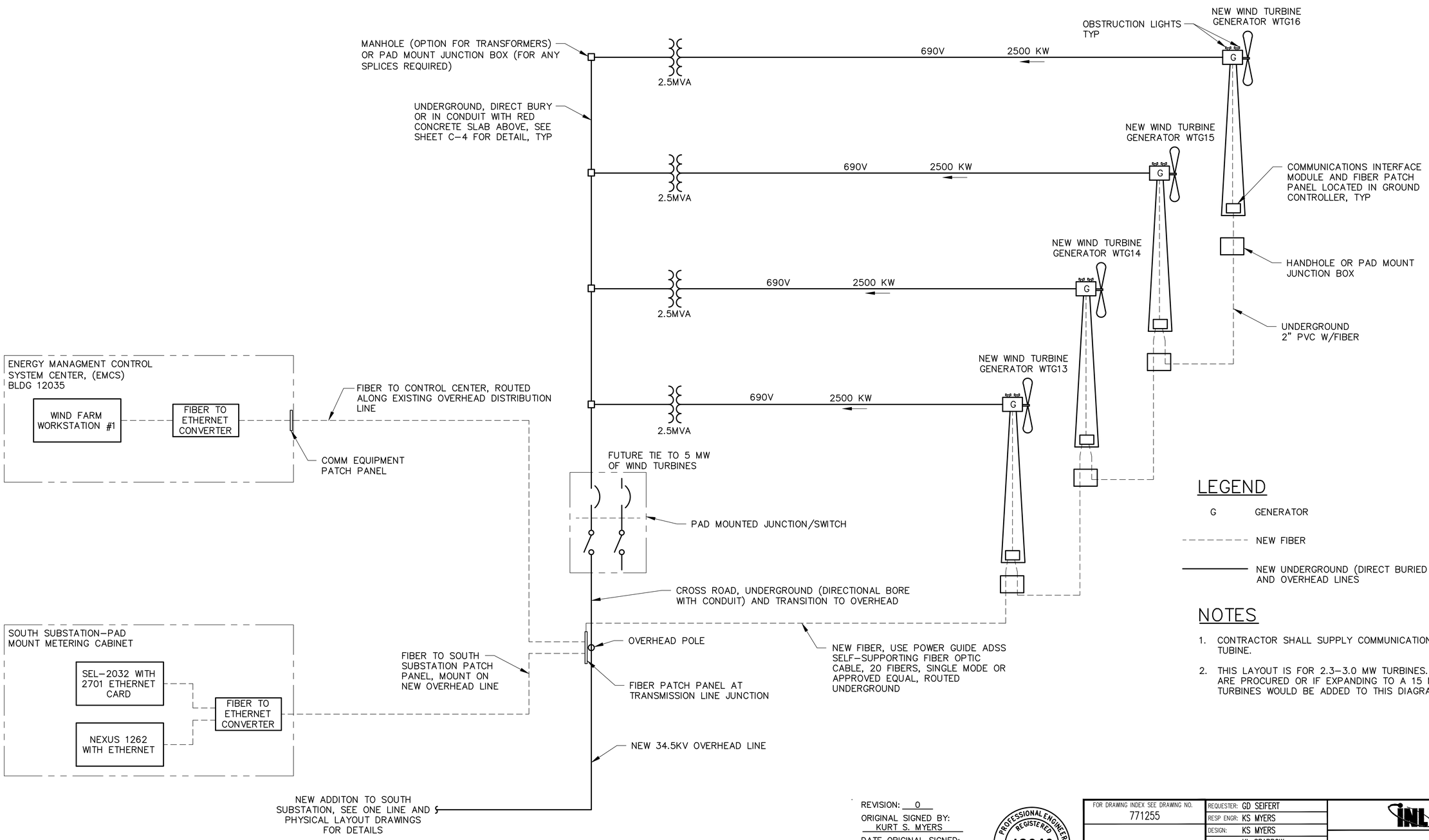

LEGEND

G GENERATOR

- - - - - - - - NEW FIBER

———— NEW UNDERGROUND (DIRECT BURIED OR CABLE IN CONDUIT) AND OVERHEAD LINES

NOTES

1. CONTRACTOR SHALL SUPPLY COMMUNICATION PULL BOXES FOR WIND TUBINE.
2. THIS LAYOUT IS FOR 2.3–3.0 MW TURBINES. IF 1.5–2.1 MW TURBINES ARE PROCURED OR IF EXPANDING TO A 15 MW SYSTEM, ADDITIONAL TURBINES WOULD BE ADDED TO THIS DIAGRAM.

SYSTEM DIAGRAM

REVISION: 0
ORIGINAL SIGNED BY: KURT S. MYERS
DATE ORIGINAL SIGNED: 10-4-2010
SEAL NUMBER: 12048
ORIGINAL STORED AT: EROB DOCUMENT CONTROL

PROFESSIONAL ENGINEER REGISTERED 12048 STATE OF IDAHO KURT S. MYERS

INDEX CODE NUMBER			
AREA	TYPE	CL	ORIG
540	0900	05	081

FOR DRAWING INDEX SEE DRAWING NO. 771255

NO SCALE

DESIGN PHASE: AFC

REQUESTER: GD SEIFERT
RESP ENGR: KS MYERS
DESIGN: KS MYERS
DRAWN: KL SPARROW
PROJECT NO. NA
SPCL CODE NA
FOR REVIEW/APPROVAL SIGNATURES SEE ECR NO. 584228
EFFECTIVE DATE: 10/4/2010

Idaho National Laboratory

PANTEX
WIND FARM PROJECT
SYSTEM DIAGRAM

SIZE	CAGE CODE	INDEX CODE NUMBER				DWG NO.	REV
		AREA	TYPE	CL	ORIG		
D	01MF3	540	0400	10	081	771266	

SCALE: NONE
SHEET E-4

FMT-D1-INL
File: 771266.dwg
Path: J:\Work for others\Pantex
Date: 10/01/10 - 3:13 P.M. Layout Name: Layout1
ID: KEN

REVISIONS		
REV	DESCRIPTION	EFFECTIVE DATE:

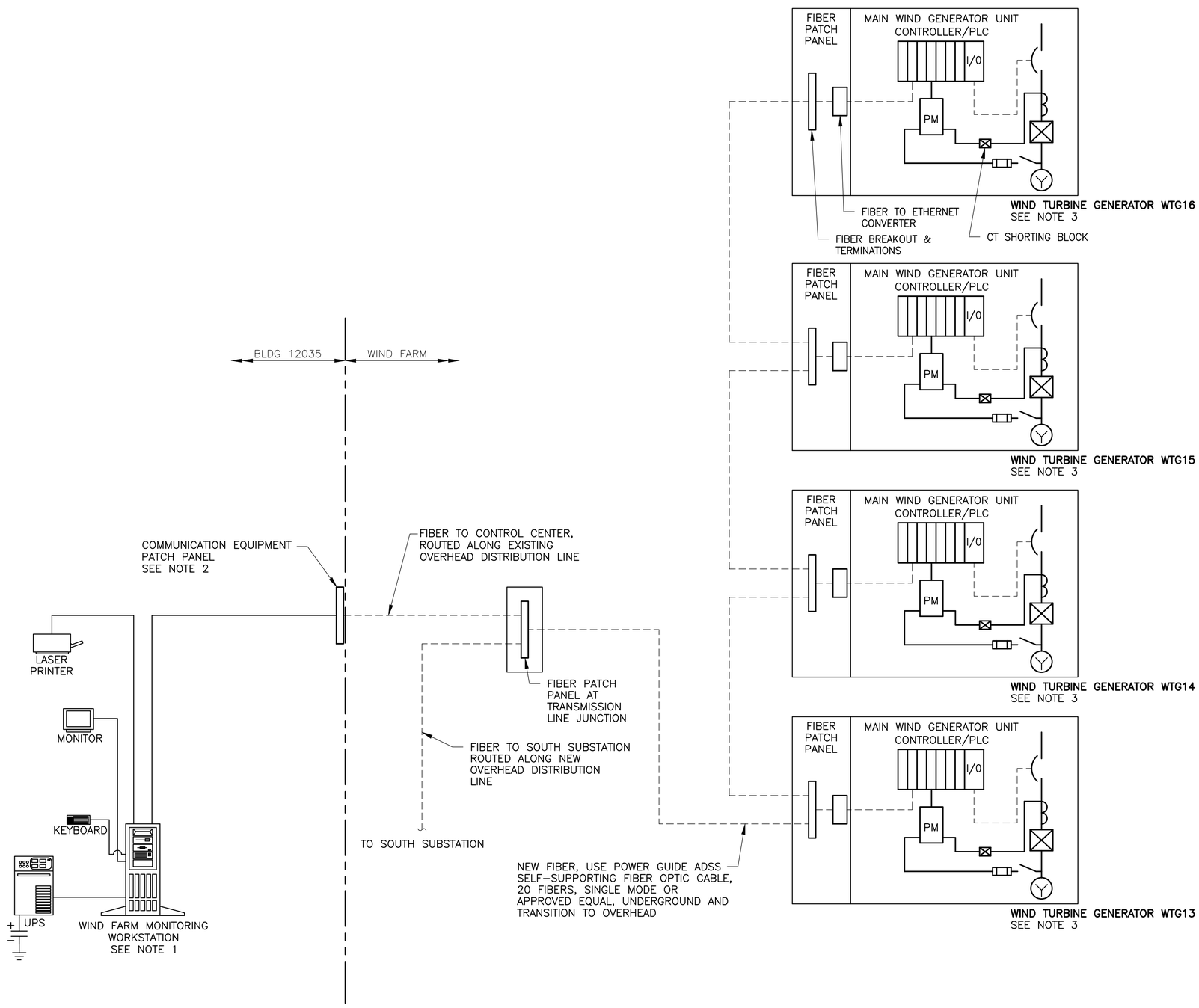

NOTES

1. WIND TURBINE AND POWER MONITOR WORKSTATIONS SHALL BE PROVIDED WITH HARDWARE AND SOFTWARE COMMUNICATION TO THE WIND FARM. WORKSTATIONS ARE LOCATED AT THE ENERGY MANAGEMENT CONTROL SYSTEM CENTER.
2. THE ELECTRICAL CONTRACTOR SHALL COORDINATE WITH PANTEX COMMUNICATION STAFF FOR COMMUNICATION WIRING AND TERMINATION REQUIREMENTS AT THE EXISTING COMMUNICATION EQUIPMENT IN BLDG 12035.
3. ACTUAL CONTROLS SCHEME AND EQUIPMENT DETAILS DEPENDENT UPON SELECTED WIND TURBINE PROVIDER.
4. THIS LAYOUT IS FOR 2.3–3.0 MW TURBINES. IF 1.5–2.1 MW TURBINES ARE PROCURED OR IF EXPANDING TO A 15 MW SYSTEM, ADDITIONAL TURBINES WOULD BE ADDED TO THIS DIAGRAM.

SYSTEM CONTROL DIAGRAM

REVISION: 0
ORIGINAL SIGNED BY: KURT S. MYERS
DATE ORIGINAL SIGNED: 10-4-2010
SEAL NUMBER: 12048
ORIGINAL STORED AT: EROB DOCUMENT CONTROL

PROFESSIONAL ENGINEER REGISTERED 12048 STATE OF IDAHO KURT S. MYERS

FOR DRAWING INDEX SEE DRAWING NO. 771255	REQUESTER: GD SEIFERT	Idaho National Laboratory
	RESP ENGR: KS MYERS	
	DESIGN: KS MYERS	PANTEX WIND FARM PROJECT
NO SCALE	DRAWN: KL SPARROW	
	PROJECT NO.: NA	SYSTEM CONTROL DIAGRAM
	SPCL CODE: NA	
	FOR REVIEW/APPROVAL SIGNATURES SEE ECR NO. 584228	SIZE D · CAGE CODE 01MF3 · INDEX CODE NUMBER AREA 540 TYPE 0400 CL 10 ORIG 081 · DWG NO. 771267 · REV
DESIGN PHASE: AFC	EFFECTIVE DATE: 10/4/2010	SCALE: NONE · SHEET E-5

File: 771267.dwg Path: U:\Work for others\Pantex Date: 10/01/10 – 3:12 P.M. Layout Name: Layout1 ID: KEN

REVISIONS		
REV	DESCRIPTION	EFFECTIVE DATE:

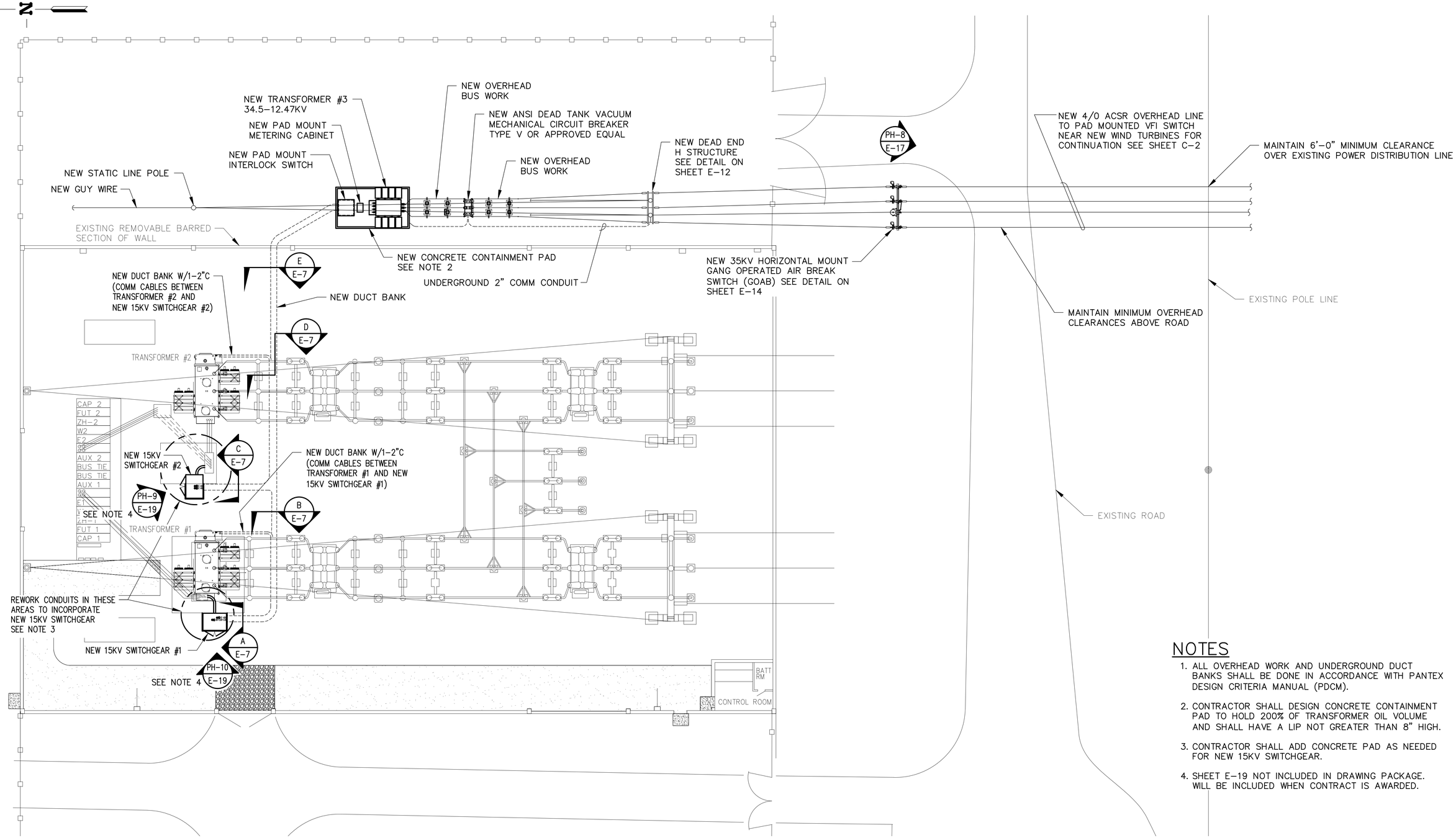

NOTES

1. ALL OVERHEAD WORK AND UNDERGROUND DUCT BANKS SHALL BE DONE IN ACCORDANCE WITH PANTEX DESIGN CRITERIA MANUAL (PDCM).
2. CONTRACTOR SHALL DESIGN CONCRETE CONTAINMENT PAD TO HOLD 200% OF TRANSFORMER OIL VOLUME AND SHALL HAVE A LIP NOT GREATER THAN 8" HIGH.
3. CONTRACTOR SHALL ADD CONCRETE PAD AS NEEDED FOR NEW 15KV SWITCHGEAR.
4. SHEET E–19 NOT INCLUDED IN DRAWING PACKAGE. WILL BE INCLUDED WHEN CONTRACT IS AWARDED.

SOUTH SUBSTATION INSTALLATION PLAN

REVISION: 0
ORIGINAL SIGNED BY: KURT S. MYERS
DATE ORIGINAL SIGNED: 10–4–2010
SEAL NUMBER: 12048
ORIGINAL STORED AT: EROB DOCUMENT CONTROL

PROFESSIONAL ENGINEER REGISTERED 12048 STATE OF IDAHO KURT S. MYERS

FOR DRAWING INDEX SEE DRAWING NO.	771255
SCALE: 1/16" = 1'–0"	
DESIGN PHASE:	AFC
REQUESTER:	GD SEIFERT
RESP ENGR:	KS MYERS
DESIGN:	KS MYERS
DRAWN:	KL SPARROW
PROJECT NO.	NA
SPCL CODE	NA
FOR REVIEW/APPROVAL SIGNATURES SEE ECR NO.	584228
EFFECTIVE DATE:	10/4/2010

Idaho National Laboratory

PANTEX
WIND FARM PROJECT

SOUTH SUBSTATION INSTALLATION PLAN

SIZE	CAGE CODE	INDEX CODE NUMBER AREA	TYPE	CL	ORIG	DWG NO.	REV
D	01MF3	540	0400	10	081	771268	

SCALE: 1/16" = 1'–0" SHEET E–6

REVISIONS		
REV	DESCRIPTION	EFFECTIVE DATE:

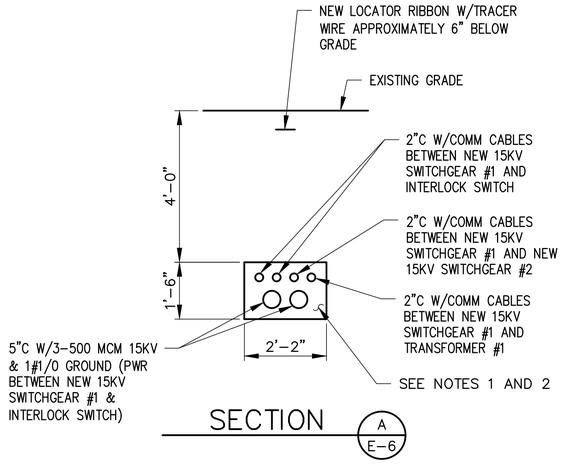

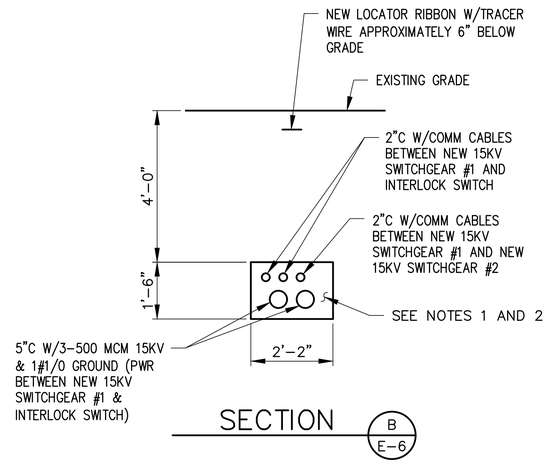

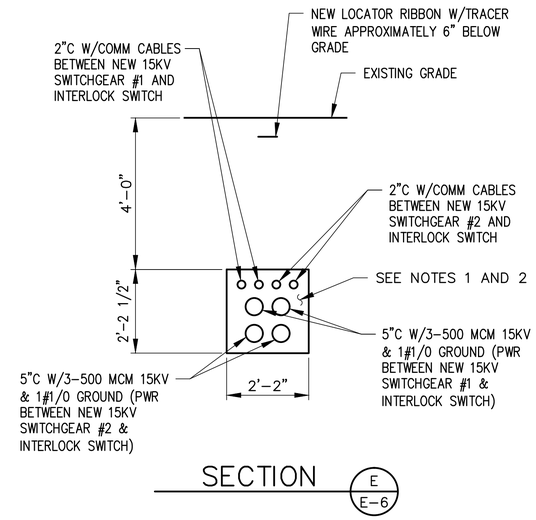

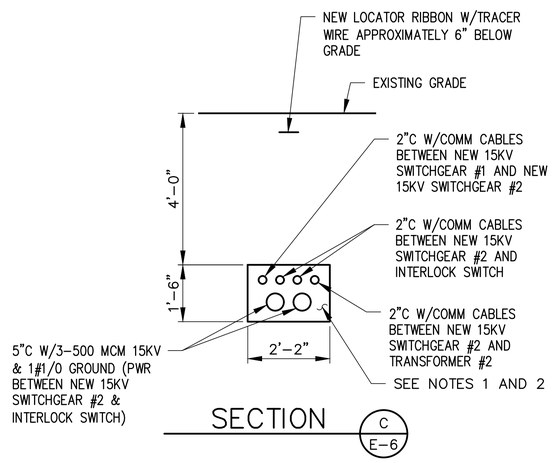

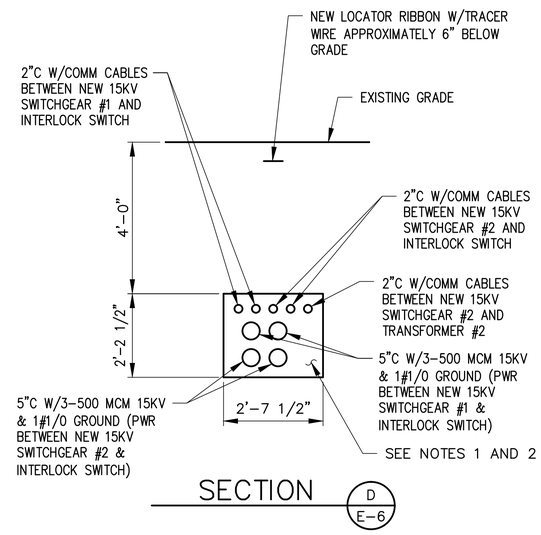

NOTES

1. REINFORCED CONCRETE DUCT BANK SHALL BE DESIGNED BY THE CONTRACTOR AND SUBMITTED FOR APPROVAL.
2. INSTALL GREENLEE TRUE TAPE IN ALL CONDUITS.

REVISION: 0
ORIGINAL SIGNED BY: KURT S. MYERS
DATE ORIGINAL SIGNED: 10-4-2010
SEAL NUMBER: 12048
ORIGINAL STORED AT: EROB DOCUMENT CONTROL

PROFESSIONAL ENGINEER REGISTERED 12048 STATE OF IDAHO KURT S. MYERS

FOR DRAWING INDEX SEE DRAWING NO.	771255
SCALE: 1/2" = 1'-0"	
DESIGN PHASE:	AFC
REQUESTER:	GD SEIFERT
RESP ENGR:	KS MYERS
DESIGN:	KS MYERS
DRAWN:	KL SPARROW
PROJECT NO.	NA
SPCL CODE	NA
FOR REVIEW/APPROVAL SIGNATURES SEE EOR NO.	584228
EFFECTIVE DATE:	10/4/2010

Idaho National Laboratory

PANTEX
WIND FARM PROJECT

DUCT BANK SECTIONS

SIZE	CAGE CODE	INDEX CODE NUMBER AREA	TYPE	CL	ORIG	DWG NO.	REV
D	01MF3	540	0400	10	081	771269	

SCALE: 1/2" = 1'-0" SHEET E-7

File: 771269.dwg Path: J:\Work for others\Pantex Date: 10/01/10 - 3:10 P.M. Layout Name: E-9 ID: KEN

REVISIONS		
REV	DESCRIPTION	EFFECTIVE DATE:

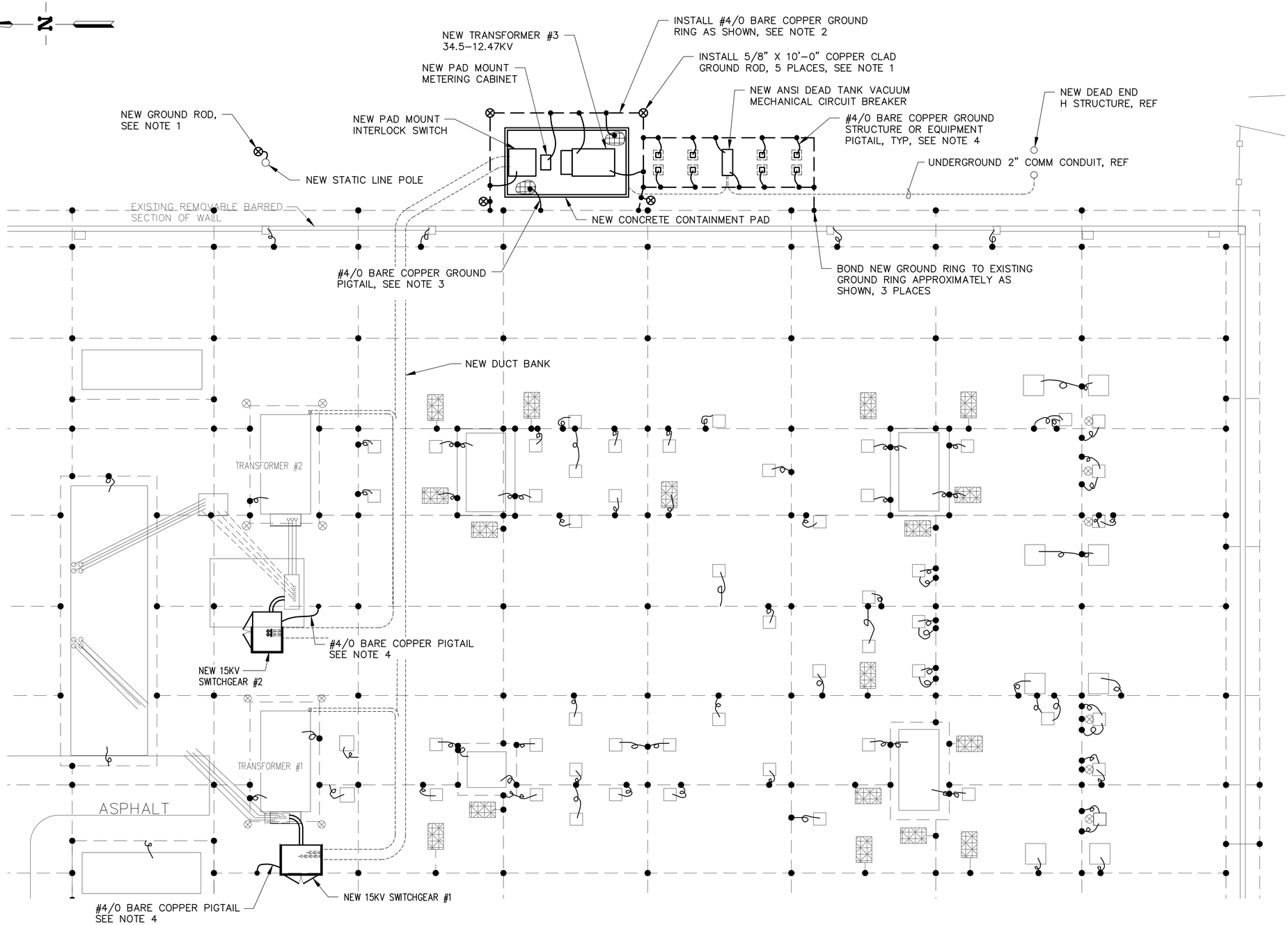

SOUTH SUBSTATION GROUNDING PLAN

NOTES

1. INSTALL GROUND RODS AT EACH CORNER OF CONCRETE CONTAINMENT PAD AND AT BASE OF STATIC LINE POLE. TOP OF GROUND ROD SHALL BE A MINIMUM OF 6" BELOW GRADE. ATTACH TO GROUND RING USING A NON–REVERSIBLE GROUNDING CONNECTOR.
2. GROUNDING RING SHALL BE BURIED APPROXIMATELY 2'–6" BELOW FINISHED GRADE AND APPROXIMATELY 3'–0" AWAY FROM EDGE OF CONCRETE STRUCTURES APPROXIMATELY AS SHOWN.
3. BOND PIGTAIL TO REBAR IN CONCRETE CONTAINMENT PAD AND TO NEW OR EXISTING GROUND RING AT OPPOSITE CORNERS APPROXIMATELY AS SHOWN.
4. BOND PIGTAIL TO GROUND RING AND COIL ENOUGH EXCESS TO MAKE GROUNDING CONNECTION TO STEEL STRUTURES OR EQUIPMENT APPROXIMATELY AS SHOWN.

REVISION: 0
ORIGINAL SIGNED BY: KURT S. MYERS
DATE ORIGINAL SIGNED: 10–4–2010
SEAL NUMBER: 12048
ORIGINAL STORED AT: EROB DOCUMENT CONTROL

PROFESSIONAL ENGINEER REGISTERED 12048 STATE OF IDAHO KURT S. MYERS

FOR DRAWING INDEX SEE DRAWING NO.	771255
SCALE: 3/32" = 1'–0"	
DESIGN PHASE:	AFC
REQUESTER:	GD SEIFERT
RESP ENGR:	KS MYERS
DESIGN:	KS MYERS
DRAWN:	KL SPARROW
PROJECT NO.	NA
SPCL CODE	NA
FOR REVIEW/APPROVAL SIGNATURES SEE ECR NO.	584228
EFFECTIVE DATE:	10/4/2010

Idaho National Laboratory

PANTEX
WIND FARM PROJECT

SOUTH SUBSTATION GROUNDING PLAN

SIZE	CAGE CODE	INDEX CODE NUMBER AREA	TYPE	CL	ORIG.	DWG NO.	REV
D	01MF3	540	0400	10	081	771270	

SCALE: 3/32" = 1'–0" SHEET E–8

FMT–D1–INL
D: KEN
Date: 10/01/10 – 2:41 P.M. Layout Name: E–9
File: 771270.dwg
Path: J:\Work for others\Pantex

REVISIONS		
REV	DESCRIPTION	EFFECTIVE DATE:

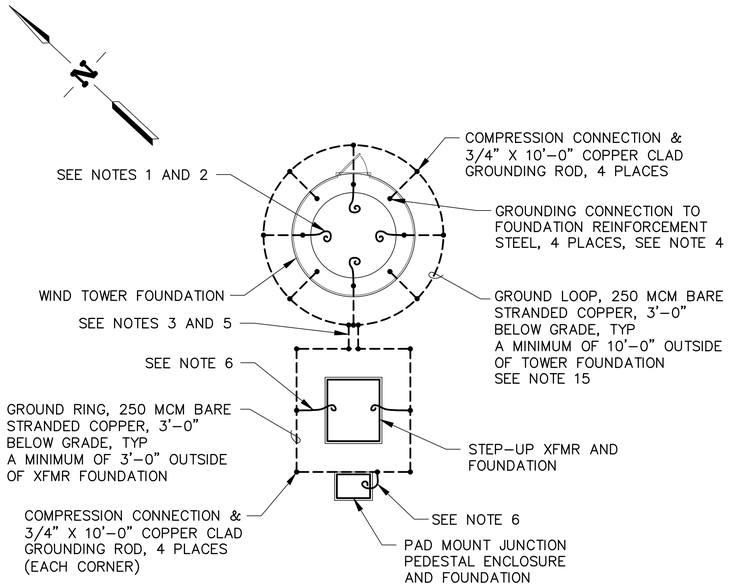

TYPICAL WIND TOWER FOUNDTION GROUNDING

PLAN

SCALE: 1/8"=1'-0"

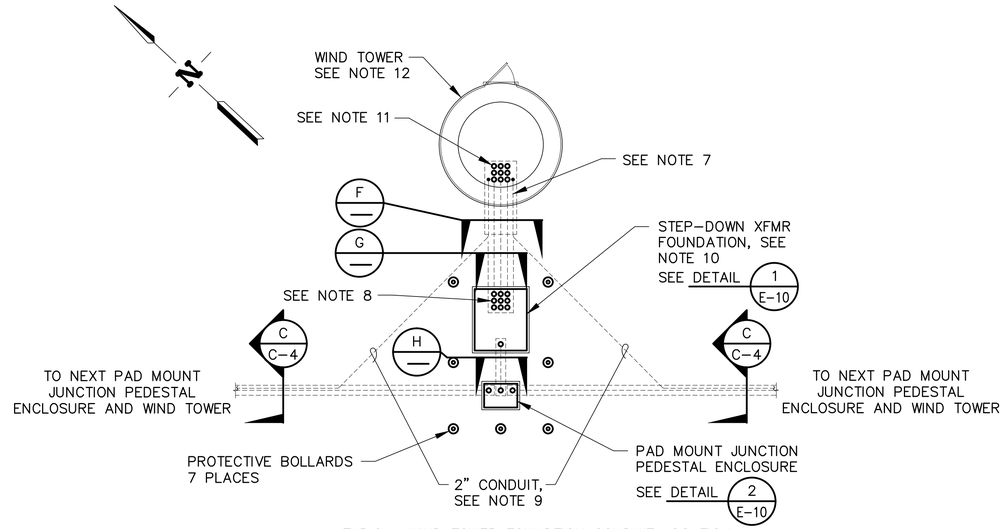

TYPICAL WIND TOWER FOUNDTION CONDUIT LOCATION

PLAN

SCALE: 1/8"=1'-0"

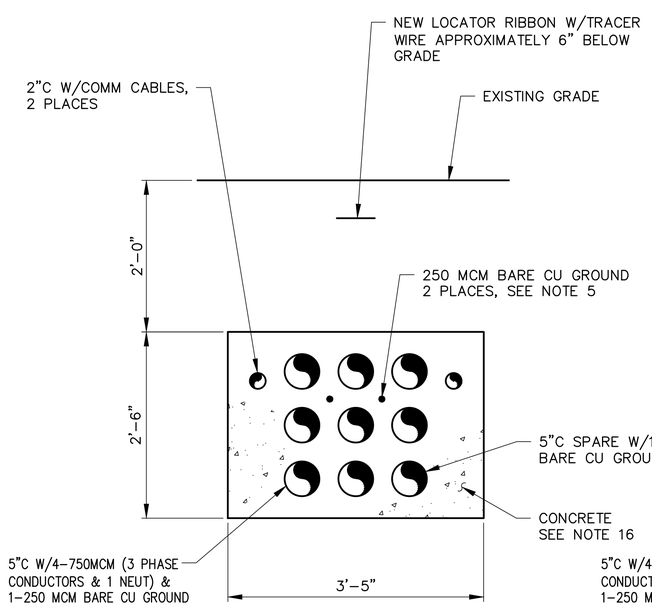

SECTION F

SCALE: 1"=1'-0"

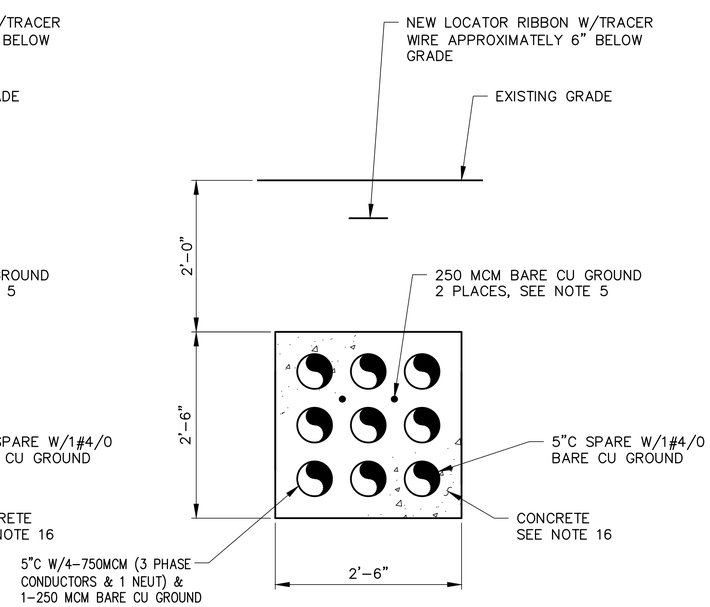

SECTION G

SCALE: 1"=1'-0"

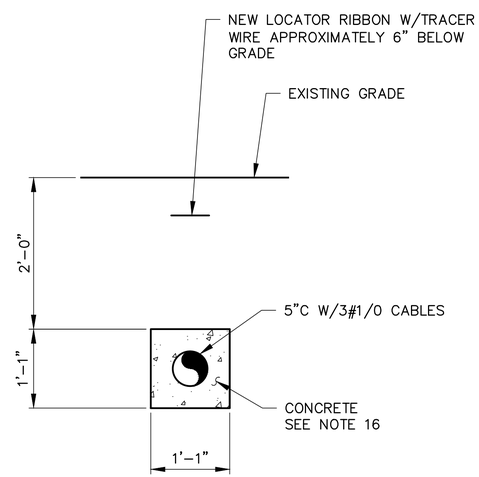

SECTION H

SCALE: 1"=1'-0"

NOTES

1. FOUR GROUNDING PIGTAILS ARE TO BE ROUTED THROUGH FOUNDATION RING.
2. THE CONTRACTOR SHALL EXTEND THE PIGTAILS AND CONNECT THEM TO THE TOWER INTERIOR IN FOUR PLACES.
3. EXTEND THE TWO GROUND CONDUCTORS WHICH WERE STUBBED UP OUT OF THE BASE RING BY THE CIVIL CONTRACTOR AND BOND THEM TO THE GROUND LOOP.
4. EXTEND THE FOUR GROUND CONDUCTORS THROUGH THE FOUNDATION AND BOND THEM TO THE GROUND LOOP.
5. THE TWO GROUNDING CONDUCTORS SHALL BE ROUTED UP AND CONNECTED TO THE TRANSFORMER GROUND BUS AND SECTIONALIZER.
6. GROUND THE PIGTAIL TO THE CASE OF TRANSFORMER AND PAD MOUNT JUNCTION PEDESTAL.
7. THE INSTALLATION OF THE POWER AND THE CONTROL CONDUIT AND GROUND CONDUCTORS MUST BE COORDINATED WITH THE FOUNDATION DESIGN AND INSTALLATION.
8. THE 5" CONDUITS SHALL BE EXTENDED AND TURNED UP FOR THE 35KV CABLES TO THE STEP-DOWN TRANSFORMER. THE LOCATION OF THE CONDUITS MUST BE COORDINATED WITH THE TRANSFORMER OPENING.
9. THE TWO 2" CONDUITS SHALL BE ROUTED NEAR 5" POWER CABLES AND CONDUITS SHOWN IN SECTION "F" THIS SHEET AND SECTION "C" ON SHEET C-4 EXTENDED AS REQUIRED.
10. THE STEP-DOWN TRANSFORMER SHALL BE LOCATED DUE SOUTHWEST OF THE WIND TOWER. THE ACTUAL LOCATION OF THE TRANSFORMER SHALL BE DETERMINED IN THE FIELD SUCH AS TO AVOID THE CRANE PAD. PROVIDE ADEQUATE MAINTENANCE ACCESS AND SUCH THAT THE 35KV CABLES ARE OF THE SAME LENGTH. THE ACTUAL SIZE OF THE TRANSFORMER PAD AND THE LOCATION OF THE CABLE OPENING SHALL BE COORDINATED WITH THE TRANSFORMER REQUIREMENTS. A TRANSFORMER VAULT OR RISER MAYBE USED IN LIEU OF A PAD.
11. THE 35KV POWER CABLES AND ASSOCIATED CONDUITS FROM THE STEP-DOWN TRANSFORMER SHALL BE EXTENDED AS REQUIRED TO THE GENERATOR GROUND CONTROLLER LOCATED NEAR THE BOTTOM OF THE TOWER. THE 2" CONDUITS AND COMMUNICATION CABLE SHALL BE EXTENDED TO THE GROUND CONTROLLER AS REQUIRED.
12. THE CONTRACTOR SHALL INSTALL THE OWNER FURNISHED 35KV AND CONTROL CABLING FROM THE TOP OF THE TOWER, (NACELLE), DOWN THE GROUND CONTROLLER. THE CABLES WILL BE COILED AT THE TOP OF THE TOWER BY THE MECHANICAL ERECTOR.
13. CONCENTRIC NEUTRAL TRANSPOSITION CONNECTIONS SHALL MEET REQUIREMENTS OF NESC RULE 93E6, INCLUDING:
    - A. TRANSPOSITION CONNECTIONS AND BONDING JUMPERS SHALL BE INSULATED FOR NOMINAL 35KV SERVICE.
    - B. BONDING JUMPERS SHALL BE SIZED FOR FULL NEUTRAL CONDUCTOR CAPACITY: FOR ALL SIZES, USE 35KV #6 COPPER.
    - C. IN CASES OF MULTIPLE CABLES PER PHASE, CROSS BOND EACH CABLE SEPARATELY, MAINTAINING ISOLATION OF PHASE CONDUCTORS AT THE CROSS BOND AS SHOWN.
    - D. CROSS BONDING SHALL BE DONE AT LEAST EVERY 750.0'.
14. INSTALL GREENLEE TRUE TAPE IN ALL NEW CONDUITS.
15. CONTRACTOR SHALL ADJUST GROUND GRID DESIGN BASED ON SOIL CONDITIONS AND MANUFACTURER'S GUIDELINES. A MEASURED RESISTANCE TO NEUTRAL EARTH OF 2 OHMS OR LESS IS PREFERRED, IF MORE THAN 2 OHMS THEN CONSULT WITH PANTEX ENGINEERING AND WIND TURBINE MANUFACTURER FOR ADDITIONAL GUIDANCE.
16. REINFORCED CONCRETE DUCT BANK SHALL BE DESIGNED BY THE CONTRACTOR AND SUBMITTED FOR APPROVAL.

REVISION: 0

ORIGINAL SIGNED BY: KURT S. MYERS

DATE ORIGINAL SIGNED: 10-4-2010

SEAL NUMBER: 12048

ORIGINAL STORED AT: EROB DOCUMENT CONTROL

PROFESSIONAL ENGINEER REGISTERED 12048 STATE OF IDAHO KURT S. MYERS

FOR DRAWING INDEX SEE DRAWING NO. 771255

SCALE: 1" = 1'-0"

SCALE: 1/8" = 1'-0"

DESIGN PHASE: AFC

REQUESTER:	GD SEIFERT
RESP ENGR:	KS MYERS
DESIGN:	KS MYERS
DRAWN:	KL SPARROW
PROJECT NO.	NA
SPCL CODE	NA
FOR REVIEW/APPROVAL SIGNATURES SEE ECR NO.	584228
EFFECTIVE DATE:	10/4/2010

Idaho National Laboratory

PANTEX
WIND FARM PROJECT

WIND TURBINE PLANS, DETAILS AND SECTIONS

SIZE	CAGE CODE	INDEX CODE NUMBER AREA	TYPE	CL	ORIG.	DWG NO.	REV
D	01MF3	540	0400	10	081	771271	

SCALE: NOTED

SHEET E-9

File: 771271.dwg
Path: J:\Work for others\Pantex
Date: 10/01/10 - 3:08 P.M. Layout Name: E-8
ID: KEN

REVISIONS		
REV	DESCRIPTION	EFFECTIVE DATE:

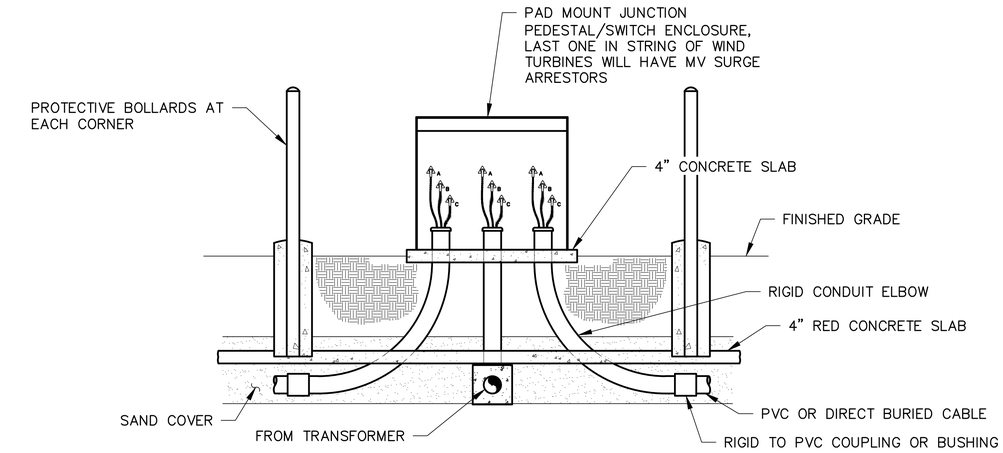

DETAIL 2/E-9
SEE NOTE 3

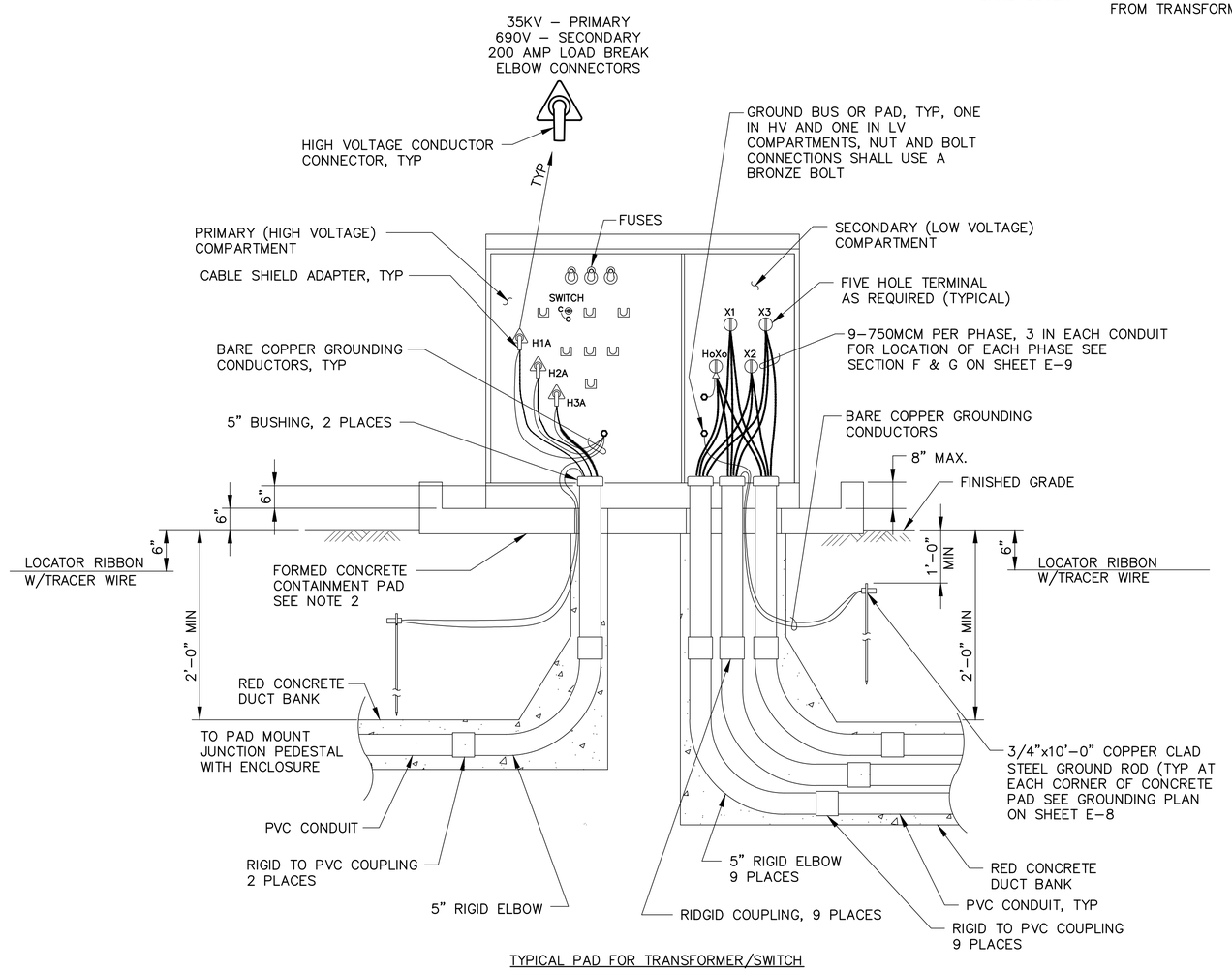

TYPICAL PAD FOR TRANSFORMER/SWITCH

DETAIL 1/E-9

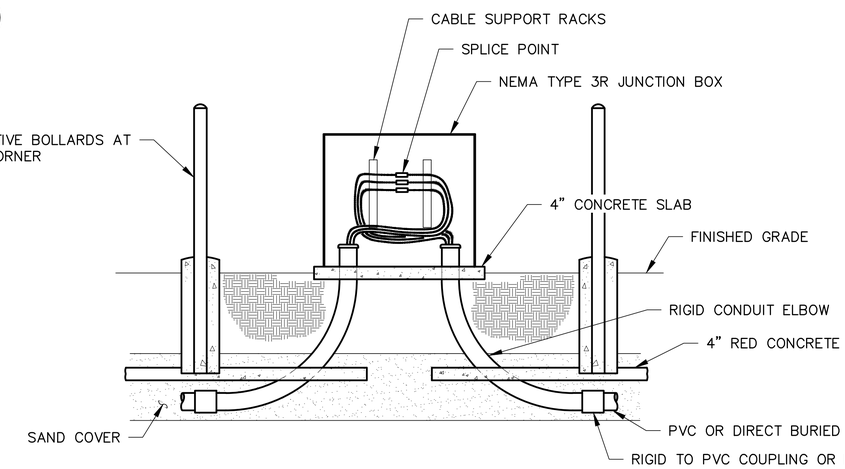

TYPICAL SPLICE JUNCTION BOX
SEE NOTE 3

NOTES

1. ELECTRICAL DETAILS SHOWN ARE FOR EXAMPLE ONLY. ACTUAL DETAILS WILL VARY DEPENDING ON THE TRANSFORMER OR JUNCTION BOX INSTALLED.
2. CONCRETE CONTAINMENT PAD SHALL BE DESIGNED TO HOLD 200% OF TRANSFORMER OIL VOLUME AND SHALL HAVE A LIP NOT GREATER THAN 8" HIGH.
3. INSTALL EQUIPMENT GROUND IN ACCORDANCE WITH 2008 NEC, SIMILAR TO GROUNDING SHOWN IN DETAIL 1 ON THIS SHEET.

REVISION: 0
ORIGINAL SIGNED BY: KURT S. MYERS
DATE ORIGINAL SIGNED: 10-4-2010
SEAL NUMBER: 12048
ORIGINAL STORED AT: EROB DOCUMENT CONTROL

PROFESSIONAL ENGINEER REGISTERED 12048 STATE OF IDAHO KURT S. MYERS

INDEX CODE NUMBER			
AREA	TYPE	CL	ORIG
540	0400	62	081

FOR DRAWING INDEX SEE DRAWING NO.	771255
NO SCALE	
DESIGN PHASE:	AFC
REQUESTER:	GD SEIFERT
RESP ENGR:	KS MYERS
DESIGN:	KS MYERS
DRAWN:	KL SPARROW
PROJECT NO.	NA
SPCL CODE	NA
FOR REVIEW/APPROVAL SIGNATURES SEE ECR NO.	584228
EFFECTIVE DATE:	10/4/2010

Idaho National Laboratory

PANTEX
WIND FARM PROJECT
JUNCTION BOX AND
TRANSFORMER POWER CONNECTION DETAILS

SIZE	CAGE CODE	INDEX CODE NUMBER				DWG NO.	REV
		AREA	TYPE	CL	ORIG		
D	01MF3	540	0400	10	081	771272	

SCALE: NONE
SHEET E-10

REVISIONS		
REV	DESCRIPTION	EFFECTIVE DATE:

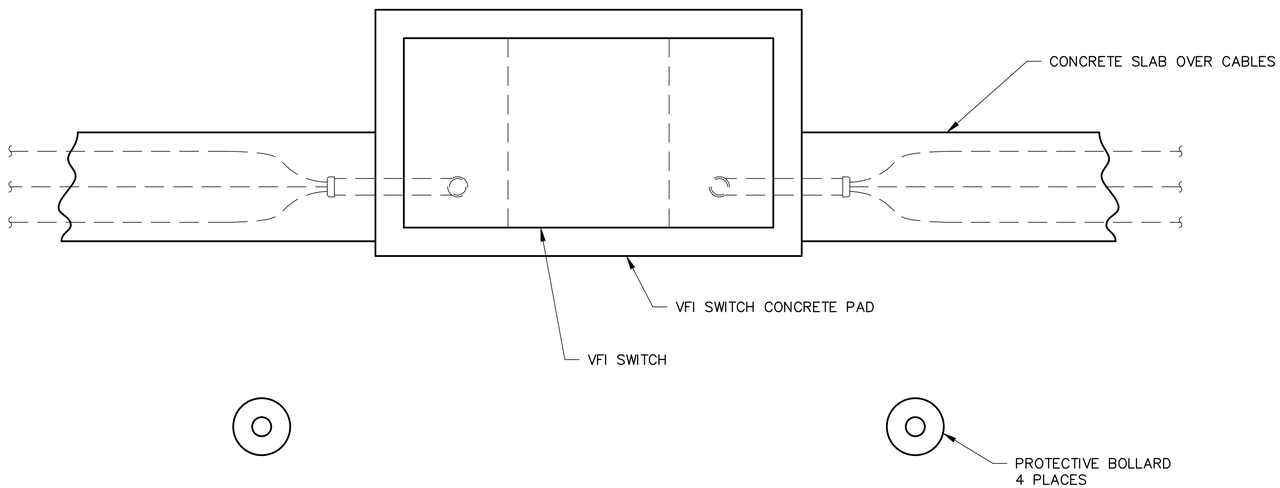

VFI SWITCH PLAN VIEW

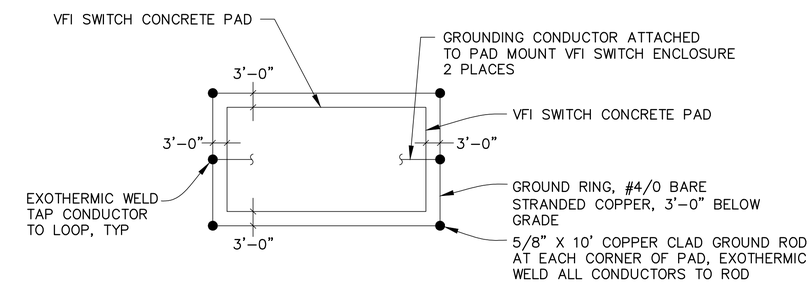

VFI SWITCH GROUNDING

PLAN

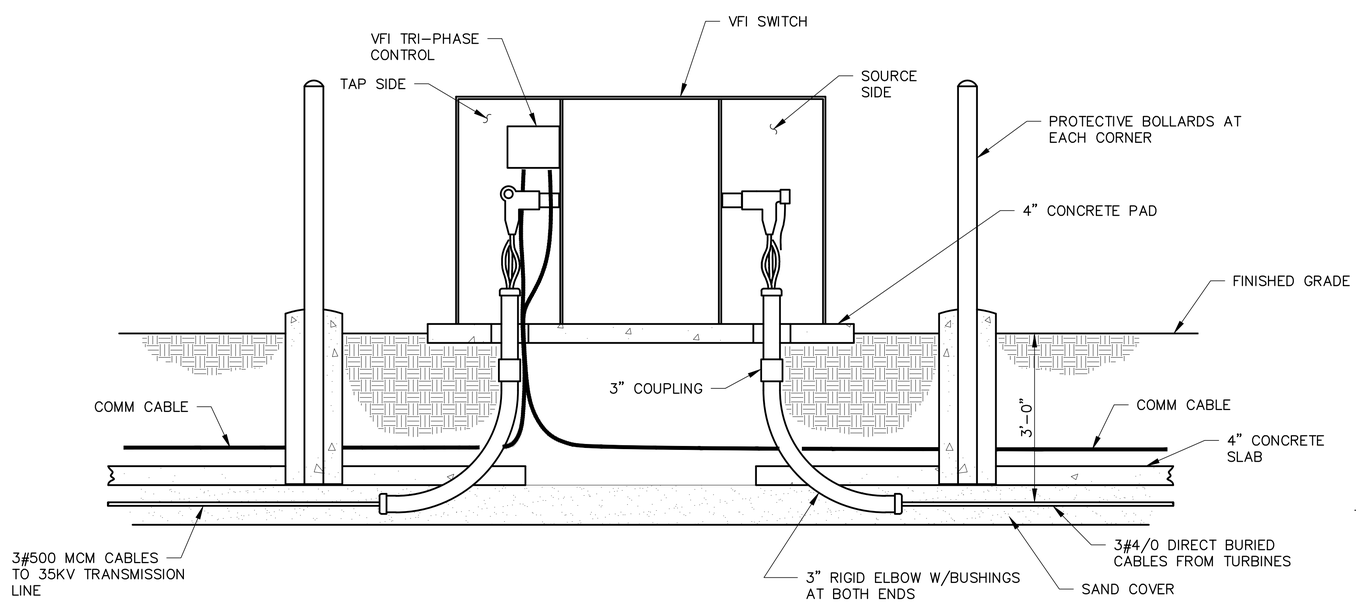

VFI SWITCH CONNECTION DETAIL

SEE NOTE 2

NOTES

1. ELECTRICAL DETAILS SHOWN ARE FOR EXAMPLE ONLY. ACTUAL DETAILS WILL VARY DEPENDING ON THE SWITCH INSTALLED.
2. INSTALL EQUIPMENT GROUND IN ACCORDANCE WITH 2008 NEC, SIMILAR TO GROUNDING SHOWN IN DETAIL 1 ON SHEET E–10.

REVISION: 0
ORIGINAL SIGNED BY: KURT S. MYERS
DATE ORIGINAL SIGNED: 10–4–2010
SEAL NUMBER: 12048
ORIGINAL STORED AT: EROB DOCUMENT CONTROL

PROFESSIONAL ENGINEER REGISTERED 12048 STATE OF IDAHO KURT S. MYERS

INDEX CODE NUMBER			
AREA	TYPE	CL	ORIG
540	0400	62	081

FOR DRAWING INDEX SEE DRAWING NO. 771255

NO SCALE

DESIGN PHASE: AFC

REQUESTER: GD SEIFERT
RESP ENGR: KS MYERS
DESIGN: KS MYERS
DRAWN: KL SPARROW
PROJECT NO. NA
SPCL CODE NA
FOR REVIEW/APPROVAL SIGNATURES SEE ECR NO. 584228
EFFECTIVE DATE: 10/4/2010

Idaho National Laboratory

PANTEX
WIND FARM PROJECT

VFI SWITCH GROUNDING PLAN AND CONNECTION DETAIL

SIZE	CAGE CODE	INDEX CODE NUMBER				DWG NO.	REV
		AREA	TYPE	CL	ORIG		
D	01MF3	540	0400	10	081	771273	

SCALE: NONE
SHEET E–11

FMT–D1–INL
ID: KEN
Date: 10/01/10 – 3:06 P.M. Layout Name: E–7
File: 771273.dwg
Path: J:\Work for others\Pantex

REVISIONS		
REV	DESCRIPTION	EFFECTIVE DATE:

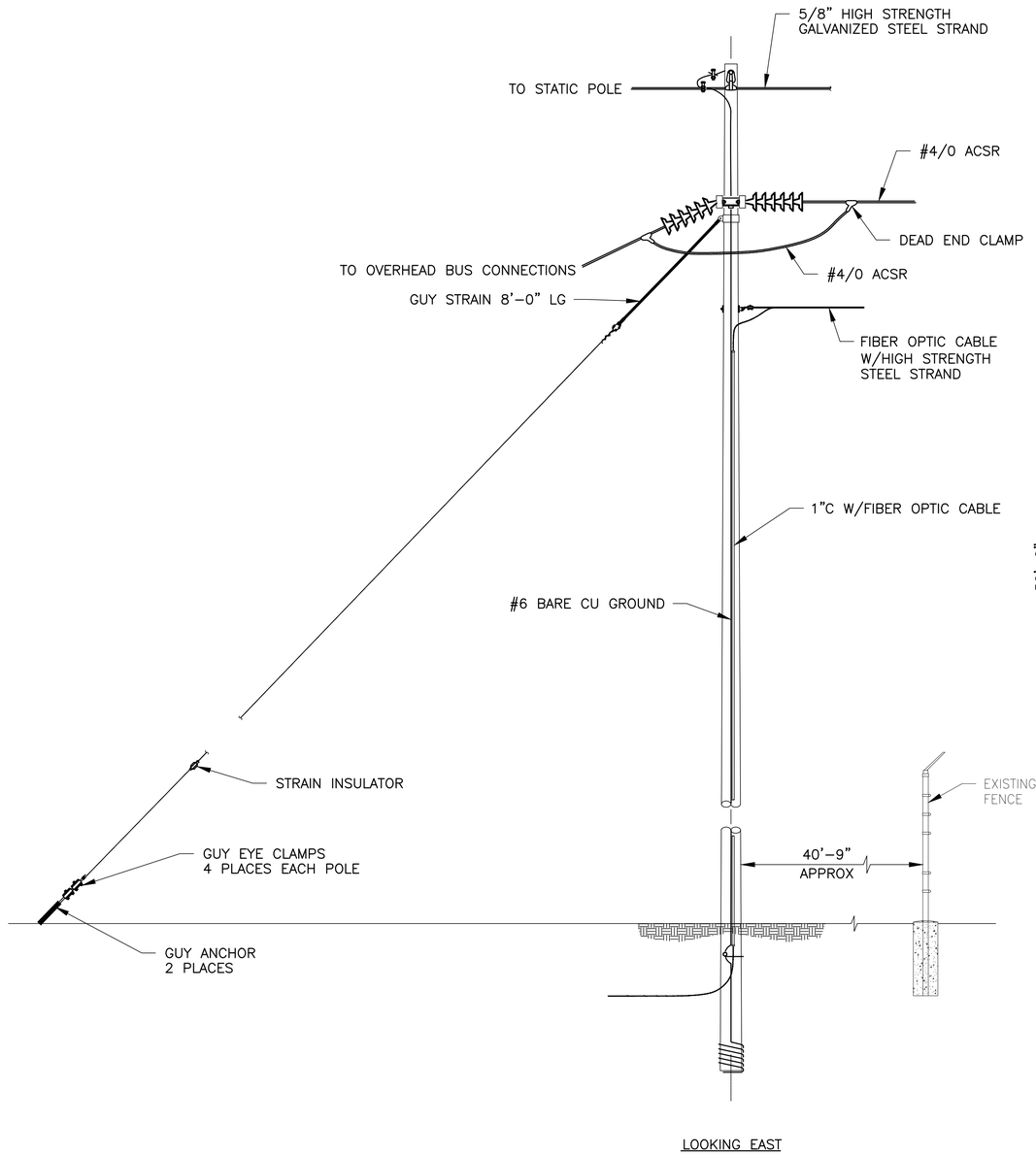

LOOKING EAST

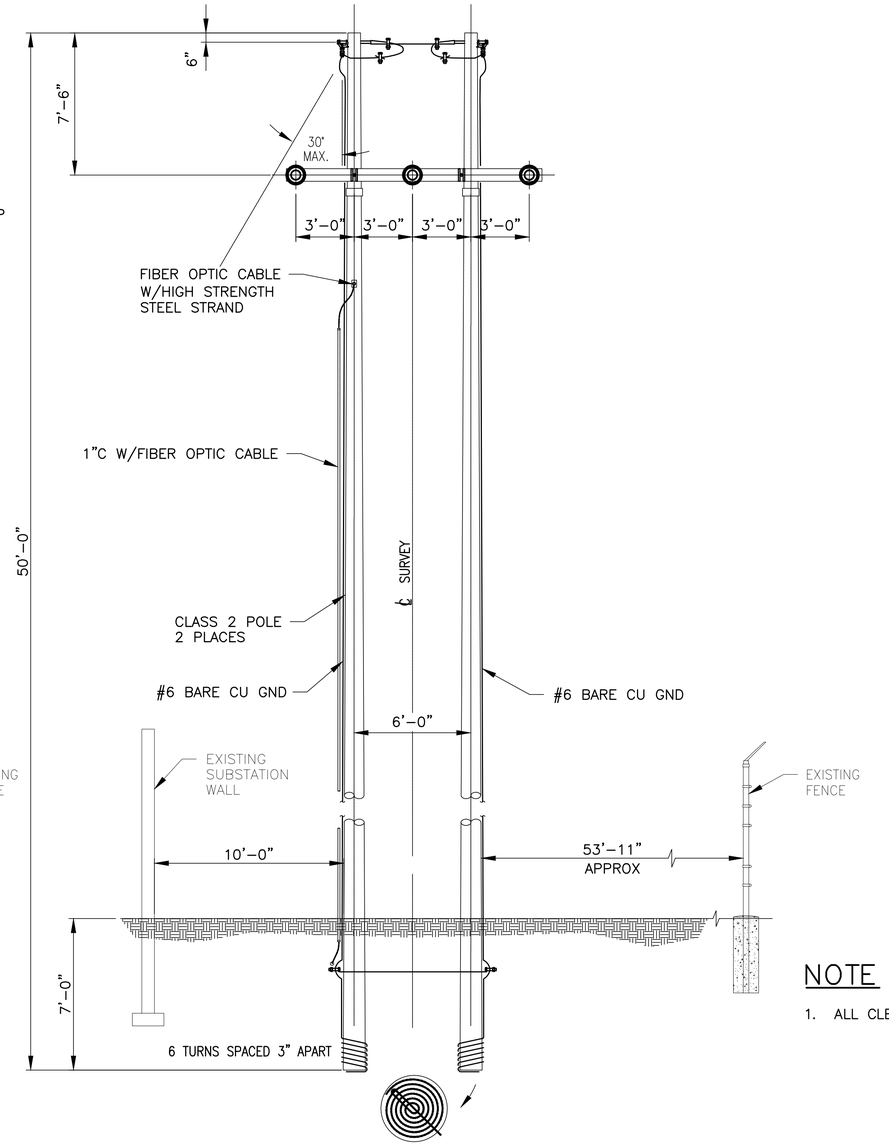

LOOKING NORTH

NOTE

1. ALL CLEARANCES SHALL MEET NESC MINIMUM REQUIREMENTS.

SOUTH SUBSTATION DEAD END H STRUCTURE POLE DETAIL

REVISION: 0
ORIGINAL SIGNED BY: KURT S. MYERS
DATE ORIGINAL SIGNED: 10-4-2010
SEAL NUMBER: 12048
ORIGINAL STORED AT: EROB DOCUMENT CONTROL

PROFESSIONAL ENGINEER REGISTERED 12048 STATE OF IDAHO KURT S. MYERS

FOR DRAWING INDEX SEE DRAWING NO. 771255	REQUESTER: GD SEIFERT	Idaho National Laboratory
	RESP ENGR: KS MYERS	PANTEX WIND FARM PROJECT SOUTH SUBSTATION DEAD END H STRUCTURE POLE DETAIL
NO SCALE	DESIGN: KS MYERS	
	DRAWN: KL SPARROW	
	PROJECT NO.: NA	
	SPCL CODE: NA	
	FOR REVIEW/APPROVAL SIGNATURES SEE ECR NO. 584228	
DESIGN PHASE: AFC	EFFECTIVE DATE: 10/4/2010	SIZE D · CAGE CODE 01MF3 · INDEX CODE NUMBER AREA 540 TYPE 0400 CL 10 ORIG. 081 · DWG NO. 771274 · REV · SCALE: NONE · SHEET E-12

File: 771274.dwg
Path: J:\Work for others\Pantex
Date: 10/01/10 - 3:05 P.M. Layout Name: Layout1
ID: KEN

REVISIONS		
REV	DESCRIPTION	EFFECTIVE DATE:

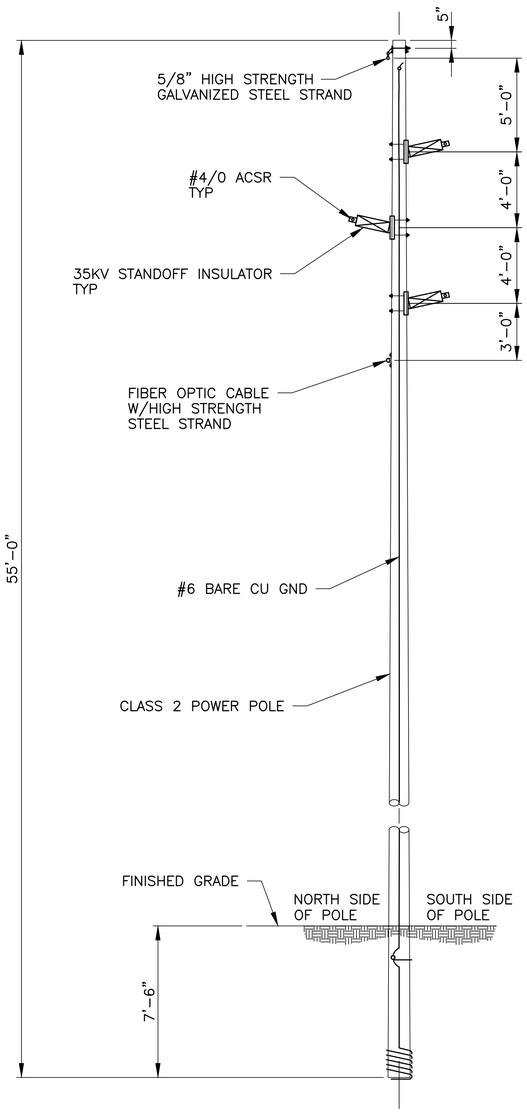

TYPICAL 35KV POWER POLE DETAIL

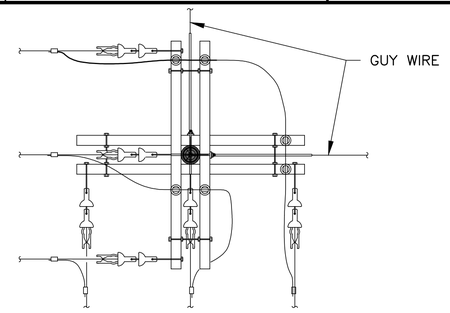

PLAN VIEW

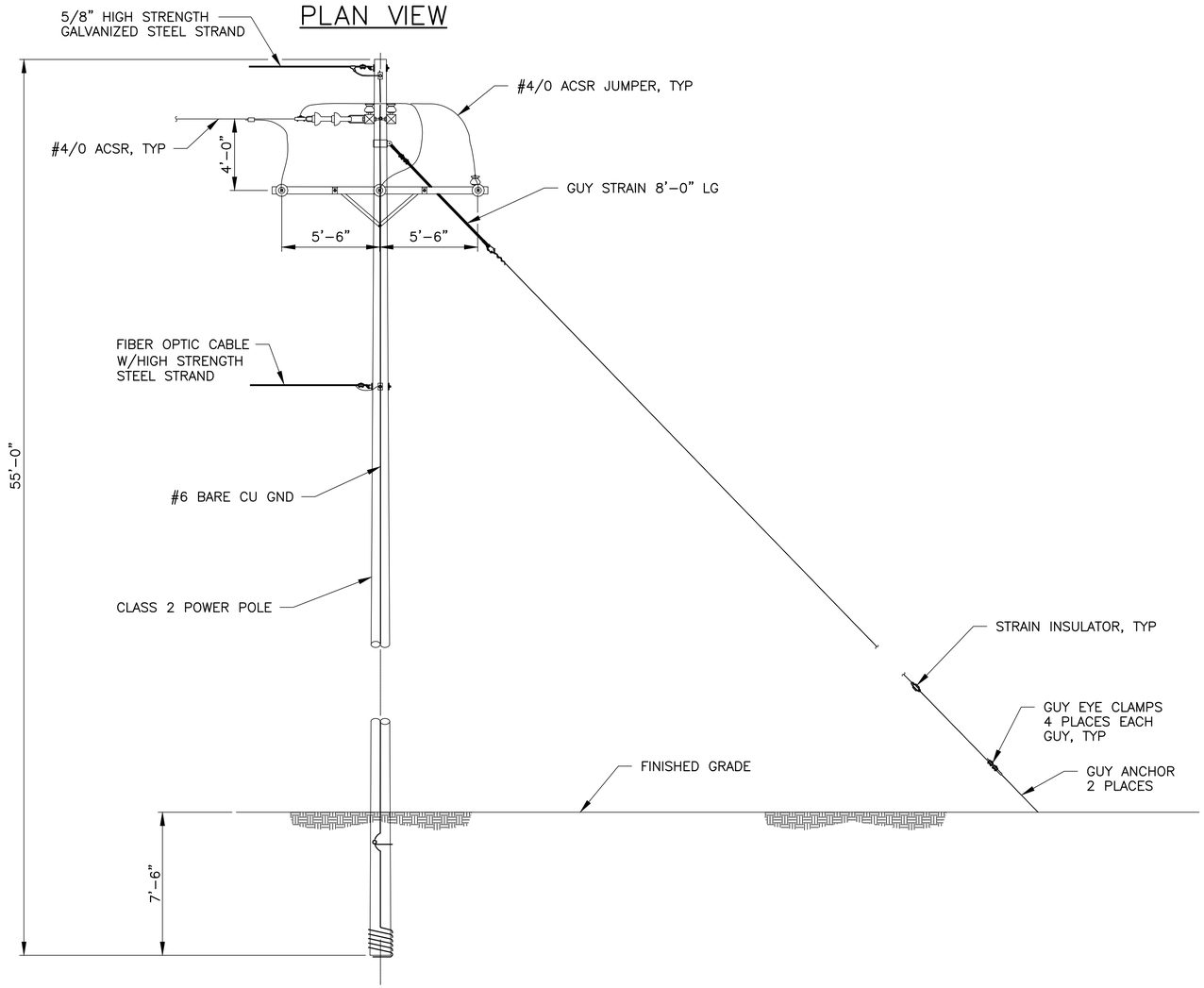

35KV CORNER POWER POLE DETAIL

NOTE

1. ALL CLEARANCES SHALL MEET NESC MINIMUM REQUIREMENTS.

REVISION: 0
ORIGINAL SIGNED BY: KURT S. MYERS
DATE ORIGINAL SIGNED: 10-4-2010
SEAL NUMBER: 12048
ORIGINAL STORED AT: EROB DOCUMENT CONTROL

PROFESSIONAL ENGINEER REGISTERED 12048 STATE OF IDAHO KURT S. MYERS

FOR DRAWING INDEX SEE DRAWING NO. 771255	REQUESTER: GD SEIFERT	Idaho National Laboratory
	RESP ENGR: KS MYERS	
	DESIGN: KS MYERS	PANTEX WIND FARM PROJECT
	DRAWN: KL SPARROW	
NO SCALE	PROJECT NO. NA	POWER POLE DETAILS
	SPCL CODE NA	
	FOR REVIEW/APPROVAL SIGNATURES SEE ECR NO. 584228	SIZE D · CAGE CODE 01MF3 · INDEX CODE NUMBER AREA 540 TYPE 0400 CL 10 ORIG 081 · DWG NO. 771275 · REV
DESIGN PHASE: AFC	EFFECTIVE DATE: 10/4/2010	SCALE: NONE · SHEET E-13

FMT-D1-INL
File: 771275.dwg
Path: J:\Work for others\Pantex
Date: 10/01/10 – 3:04 P.M. Layout Name: Layout1
ID: KEN

REVISIONS		
REV	DESCRIPTION	EFFECTIVE DATE:

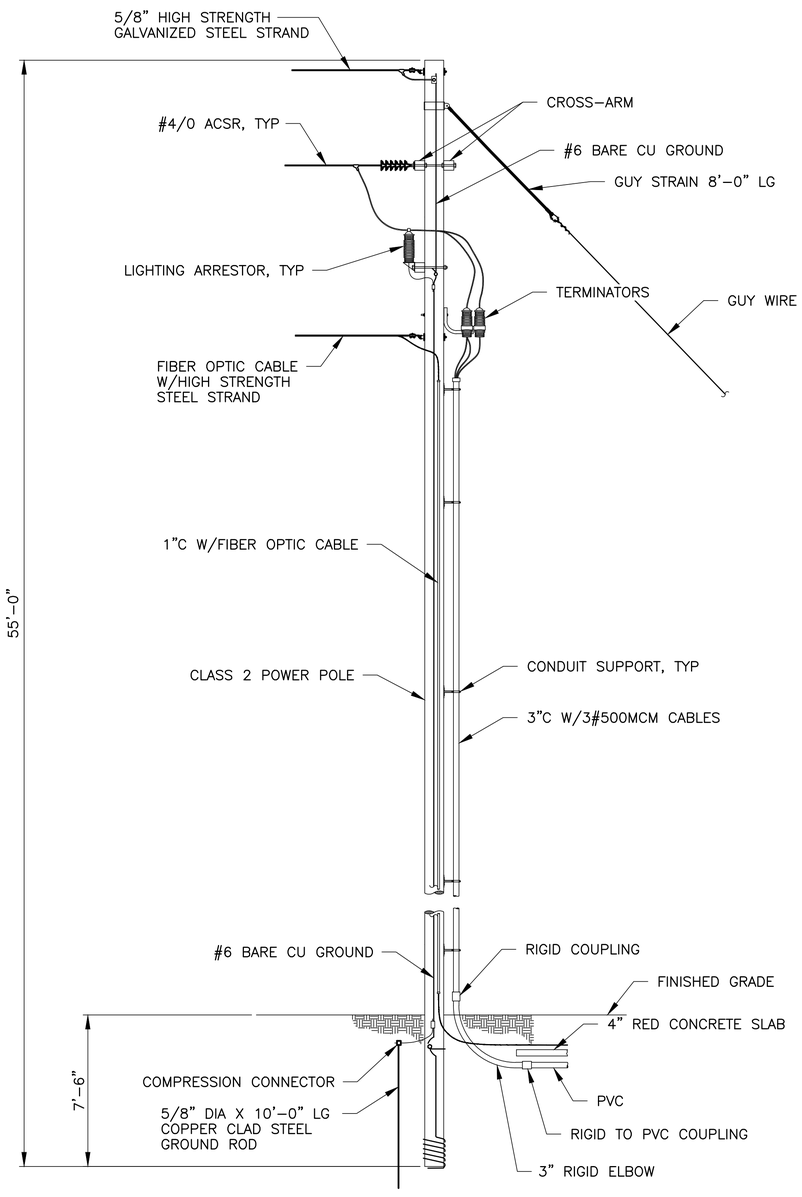

PLAN OF BUTT
COIL TYPE GROUND

35KV DEAD END POWER POLE WITH UNDERGROUND FEED DETAIL

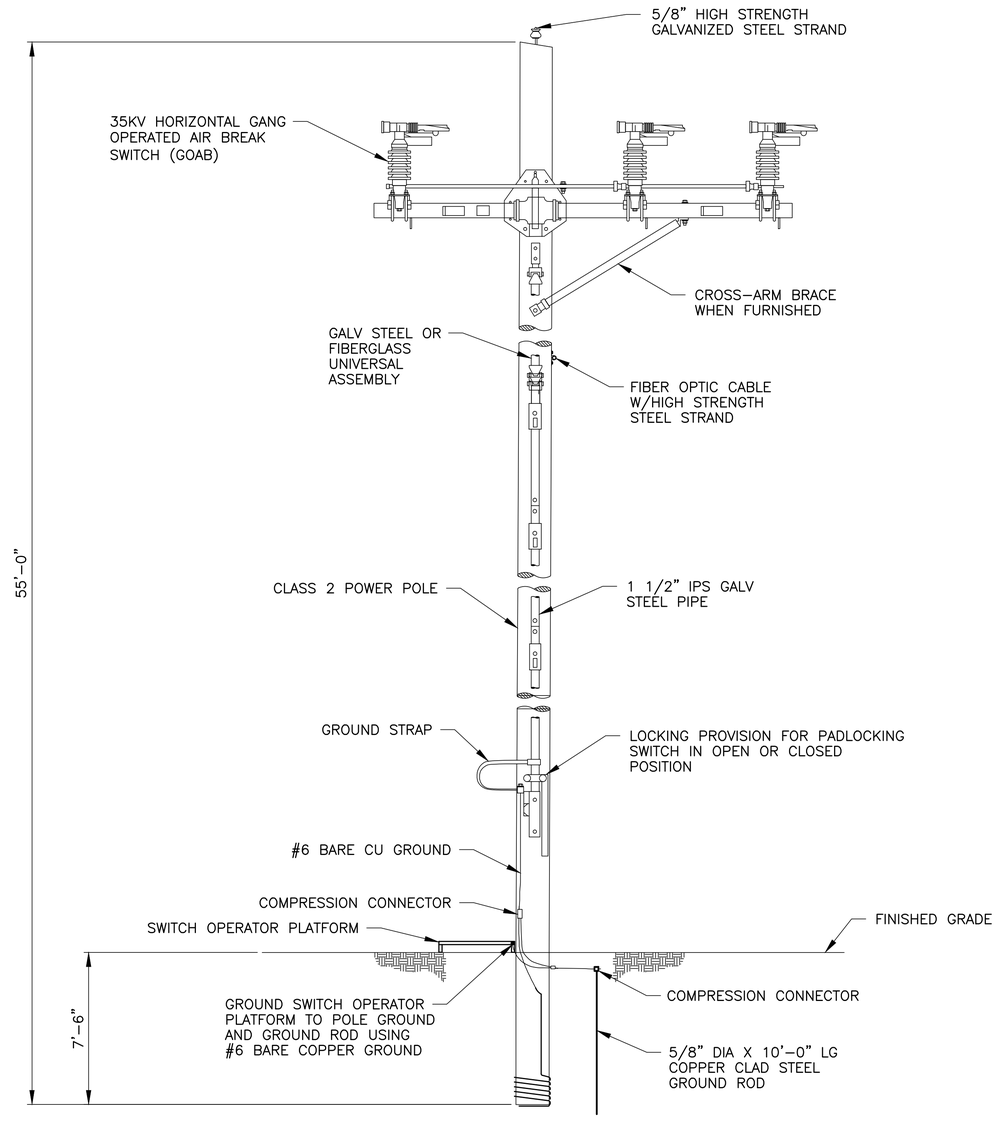

PLAN OF BUTT
COIL TYPE GROUND

35KV HORIZONTAL GANG OPERATED AIR BREAK SWITCH (GOAB) DETAIL

NOTE

1. ALL CLEARANCES SHALL MEET NESC MINIMUM REQUIREMENTS.

REVISION: 0
ORIGINAL SIGNED BY: KURT S. MYERS
DATE ORIGINAL SIGNED: 10-4-2010
SEAL NUMBER: 12048
ORIGINAL STORED AT: EROB DOCUMENT CONTROL

PROFESSIONAL ENGINEER REGISTERED 12048 STATE OF IDAHO KURT S. MYERS

FOR DRAWING INDEX SEE DRAWING NO. 771255	REQUESTER: GD SEIFERT	Idaho National Laboratory
	RESP ENGR: KS MYERS	
	DESIGN: KS MYERS	PANTEX WIND FARM PROJECT
NO SCALE	DRAWN: KL SPARROW	
	PROJECT NO. NA	
	SPCL CODE NA	POWER POLE DETAILS
	FOR REVIEW/APPROVAL SIGNATURES SEE ECR NO. 584228	SIZE D; CAGE CODE 01MF3; INDEX CODE NUMBER AREA 540 TYPE 0400 CL 10 ORIG 081; DWG NO. 771276; REV
DESIGN PHASE: AFC	EFFECTIVE DATE: 10/4/2010	SCALE: NONE; SHEET E-14

File: 771276.dwg Path: J:\Work for others\Pantex
Date: 10/01/10 - 3:03 P.M. Layout Name: Layout1
D: KEN
FMT-D1-INL

REVISIONS		
REV	DESCRIPTION	EFFECTIVE DATE:

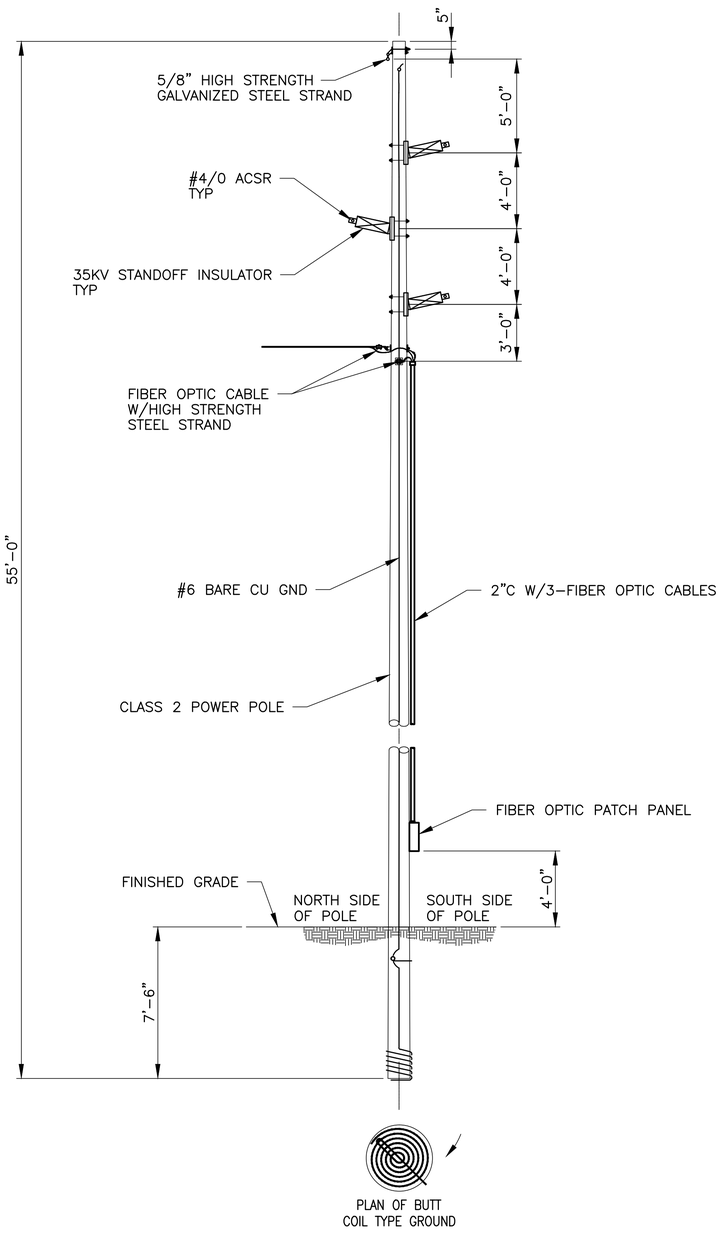

35KV POWER POLE WITH FIBER PATCH PANEL

PHOTO PH-1 C-2

PHOTO PH-2 C-2

NOTE

1. ALL CLEARANCES SHALL MEET NESC MINIMUM REQUIREMENTS.

REVISION: 0
ORIGINAL SIGNED BY: KURT S. MYERS
DATE ORIGINAL SIGNED: 10-4-2010
SEAL NUMBER: 12048
ORIGINAL STORED AT: EROB DOCUMENT CONTROL

PROFESSIONAL ENGINEER REGISTERED 12048 STATE OF IDAHO KURT S. MYERS

FOR DRAWING INDEX SEE DRAWING NO. 771255	REQUESTER: GD SEIFERT
	RESP ENGR: KS MYERS
	DESIGN: KS MYERS
	DRAWN: KL SPARROW
NO SCALE	PROJECT NO. NA
	SPCL CODE NA
	FOR REVIEW/APPROVAL SIGNATURES SEE ECR NO. 584228
	EFFECTIVE DATE: 10/4/2010
DESIGN PHASE: AFC	

Idaho National Laboratory

PANTEX
WIND FARM PROJECT

POWER POLE DETAIL AND PHOTOS

SIZE	CAGE CODE	INDEX CODE NUMBER AREA	TYPE	CL	ORIG	DWG NO.	REV
D	01MF3	540	0400	10	081	771277	

SCALE: NONE SHEET E-15

FMT-D1-INL
File: 771277.dwg Path: J:\Work for others\Pantex Date: 10/01/10 - 3:02 P.M. Layout Name: Layout1 By: KEN

REVISIONS		
REV	DESCRIPTION	EFFECTIVE DATE:

NEW FIBER OPTIC CABLE ROUTED ON EXISTING POLES BETWEEN STATIC LINE AND PHASE CONDUCTORS APPROXIMATELY AS SHOWN

INSTALL NEW POLES APPROXIMATELY AS SHOWN TO ROUTE FIBER OPTIC CABLE TO OTHER EXISTING POWER DISTRIBUTION LINE

PHOTO PH-3 / C-3

NEW FIBER OPTIC CABLE ROUTED ON EXISTING POLES BETWEEN STATIC LINE AND PHASE CONDUCTORS APPROXIMATELY AS SHOWN

NEW FIBER OPTIC CABLE SHALL BE MOUNTED ON STANDOFFS TO MAINTAIN MINIMUM CLEARANCES BETWEEN PHASE CONDUCTORS, TYP

PHOTO PH-4 / C-3

ROUTE NEW 1"C W/FIBER OPTIC CABLE NEXT TO EXISTING CONDUIT IN THIS LOCATION

NEW FIBER OPTIC CABLE ROUTED ON EXISTING POLES BETWEEN STATIC LINE AND PHASE CONDUCTORS APPROXIMATELY AS SHOWN

ROUTE NEW 1"C W/FIBER OPTIC CABLE DOWN BACK SIDE OF POLE APPROXIMATELY AS SHOWN

ROUTE NEW 1"C W/FIBER OPTIC CABLE ALONG PIPE RACK NEXT TO EXISTING CONDUIT APPROXIMATELY AS SHOWN

ROUTE NEW FIBER THROUGH EXISTING FIBER J-BOX, COIL APPROXIMATELY 3'-0" OF FIBER IN J-BOX BEFORE CONTINUING ON

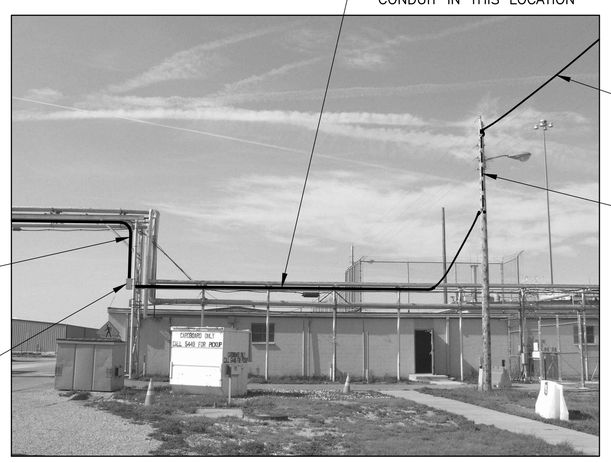

PHOTO PH-5 / C-3

ROUTE NEW 1"C W/FIBER OPTIC CABLE NEXT TO EXISTING CONDUIT AT APPROXIMATELY THIS LOCATION TO BLDG 12035

ROUTE NEW 1"C W/FIBER OPTIC CABLE NEXT TO EXISTING CONDUIT IN THIS LOCATION, REF

ROUTE NEW FIBER THROUGH EXISTING FIBER J-BOX, COIL APPROXIMATELY 3'-0" OF FIBER IN J-BOX BEFORE CONTINUING ON, REF

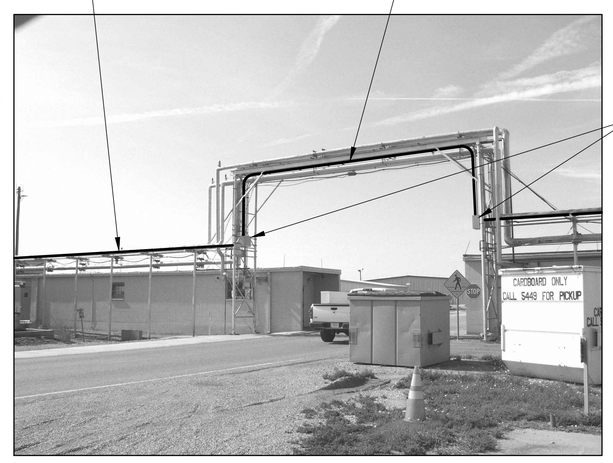

PHOTO PH-6 / C-3

NOTE

1. ALL CLEARANCES SHALL MEET NESC MINIMUM REQUIREMENTS.

REVISION: 0
ORIGINAL SIGNED BY: KURT S. MYERS
DATE ORIGINAL SIGNED: 10-4-2010
SEAL NUMBER: 12048
ORIGINAL STORED AT: EROB DOCUMENT CONTROL

PROFESSIONAL ENGINEER REGISTERED 12048 STATE OF IDAHO KURT S. MYERS

FOR DRAWING INDEX SEE DRAWING NO. 771255	REQUESTER: GD SEIFERT	Idaho National Laboratory
	RESP ENGR: KS MYERS	
NO SCALE	DESIGN: KS MYERS	PANTEX WIND FARM PROJECT
	DRAWN: KL SPARROW	
	PROJECT NO. NA	FIBER OPTIC CABLE ROUTING PHOTOS
	SPCL CODE NA	
	FOR REVIEW/APPROVAL SIGNATURES SEE ECR NO. 584228	SIZE D · CAGE CODE 01MF3 · INDEX CODE NUMBER AREA 540 TYPE 0400 Q 10 ORIG 081 · DWG NO. 771278 · REV
DESIGN PHASE: AFC	EFFECTIVE DATE: 10/4/2010	SCALE: NONE · SHEET E-16

FMT-D1-INL
File: 771278.dwg Path: J:\Work for others\Pantex
Date: 10/01/10 - 3:01 P.M. Layout Name: Layout1
ID: KEN

REVISIONS		
REV	DESCRIPTION	EFFECTIVE DATE:

PHOTO PH–7 / C–2

PHOTO PH–8 / E–6

NOTE

1. ALL CLEARANCES SHALL MEET NESC MINIMUM REQUIREMENTS.

REVISION: 0
ORIGINAL SIGNED BY: KURT S. MYERS
DATE ORIGINAL SIGNED: 10–4–2010
SEAL NUMBER: 12048
ORIGINAL STORED AT: EROB DOCUMENT CONTROL

PROFESSIONAL ENGINEER REGISTERED 12048 STATE OF IDAHO KURT S. MYERS

FOR DRAWING INDEX SEE DRAWING NO.	771255
NO SCALE	
DESIGN PHASE:	AFC
REQUESTER:	GD SEIFERT
RESP ENGR:	KS MYERS
DESIGN:	KS MYERS
DRAWN:	KL SPARROW
PROJECT NO.	NA
SPCL CODE	NA
FOR REVIEW/APPROVAL SIGNATURES SEE ECR NO.	584228
EFFECTIVE DATE:	10/4/2010

Idaho National Laboratory

PANTEX
WIND FARM PROJECT

POWER LINE MINIMUM CLEARANCE PHOTOS

SIZE	CAGE CODE	INDEX CODE NUMBER				DWG NO.	REV
		AREA	TYPE	CL	ORIG		
D	01MF3	540	0400	10	081	771279	

SCALE: NONE
SHEET E–17

File: 771279.dwg
Path: J:\Work for others\Pantex
Date: 10/01/10 – 3:00 P.M. Layout Name: Layout1
ID: KEN

REVISIONS		
REV	DESCRIPTION	EFFECTIVE DATE:

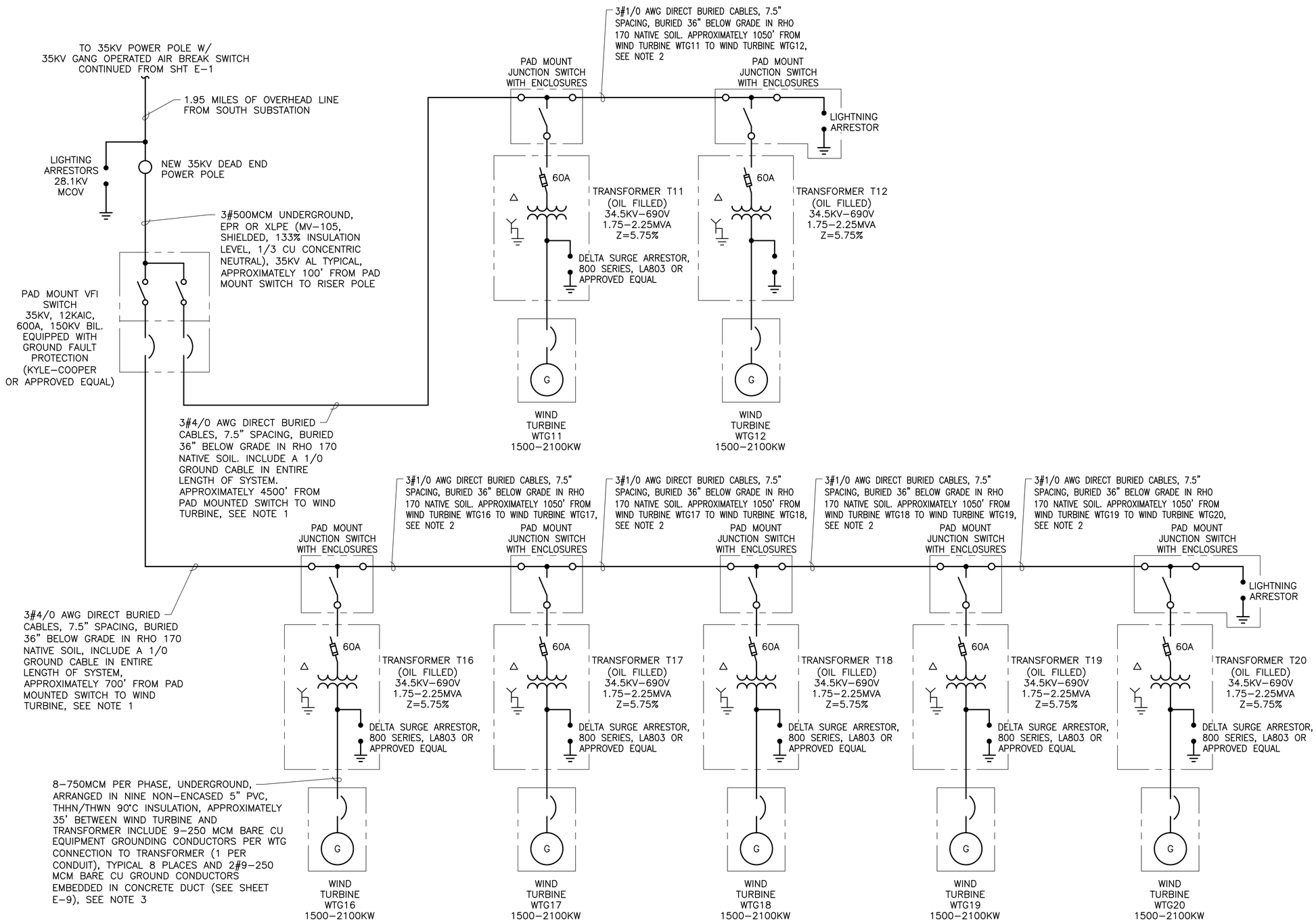

NOTES

1. #4/0 AWG AL CABLE PARAMETERS ARE:
   POSITIVE SEQUENCE:
   R=0.105 OHMS/1000 FT
   XI=0.041 OHMS/1000 FT
   ZERO SEQUENCE:
   R=0.1669 OHMS/1000 FT
   XI=0.1044 OHMS/1000 FT

   XC= 0.0346 MOHMS-1000 FT

   FOR #4/0 AWG AL CABLE RUNS, USE SHOWN CABLE LENGTHS TO CALCULATE THOSE IMPEDENCES BASED UPON TYPICAL VALUES SHOWN ABOVE

2. #1/0 AWG AL CABLE PARAMETERS ARE:
   POSITIVE SEQUENCE:
   R=0.21 OHMS/1000 FT
   XI=0.045 OHMS/1000 FT
   ZERO SEQUENCE:
   R=0.3339 OHMS/1000 FT
   XI=0.1145 OHMS/1000 FT

   XC= 0.0429 MOHMS-1000 FT

   FOR #1/0 AWG AL CABLE RUNS, USE SHOWN CABLE LENGTHS TO CALCULATE THOSE IMPEDENCES BASED UPON TYPICAL VALUES SHOWN ABOVE

3. 750MCM AL CABLE PARAMETERS ARE:
   R=0.02 OHMS/1000 FT
   XI=0.036 OHMS/1000 FT

   USE SHOWN CABLE LENGTHS TO CALCULATE THOSE IMPEDENCES BASED UPON TYPICAL VALUES SHOWN ABOVE, 7-750MCM CONDUCTORS PARALLEL PER PHASE.

4. INSTALLATION CONTRACTOR SHALL PERFORM FINAL CABLE SIZING AND GROUND GRID ADJUSTMENTS BASED ON SOIL SAMPLING RESULTS FOR THERMAL AND ELECTRICAL RESISTIVITY/CONDUCTIVITY.

5. THIS LAYOUT IS FOR 1.5-2.1 MW TURBINES.

ALTERNATE CONFIGURATION

REVISION: 0
ORIGINAL SIGNED BY: KURT S. MYERS
DATE ORIGINAL SIGNED: 10-4-2010
SEAL NUMBER: 12048
ORIGINAL STORED AT: EROB DOCUMENT CONTROL

PROFESSIONAL ENGINEER REGISTERED 12048 STATE OF IDAHO KURT S. MYERS

FOR DRAWING INDEX SEE DRAWING NO. 771255	REQUESTER: GD SEIFERT	Idaho National Laboratory
	RESP ENGR: KS MYERS	PANTEX WIND FARM PROJECT
	DESIGN: KS MYERS	
NO SCALE	DRAWN: KL SPARROW	ONE LINE DIAGRAM SHT 3 – ALTERNATE
	PROJECT NO.: NA	
	SPCL CODE: NA	
	FOR REVIEW/APPROVAL SIGNATURES SEE ECR NO. 584228	SIZE D · CAGE CODE 01MF3 · INDEX CODE NUMBER AREA 540 TYPE 0400 CL 10 ORIG 081 · DWG NO. 771280 · REV
DESIGN PHASE: AFC	EFFECTIVE DATE: 10/4/2010	SCALE: NONE · SHEET E-18

FMT-D1-INL
Layout Name: Layout1 Date: 10/01/10 - 2:59 P.M. ID: KEN
File: 771280.dwg Path: J:\Work for others\Pantex