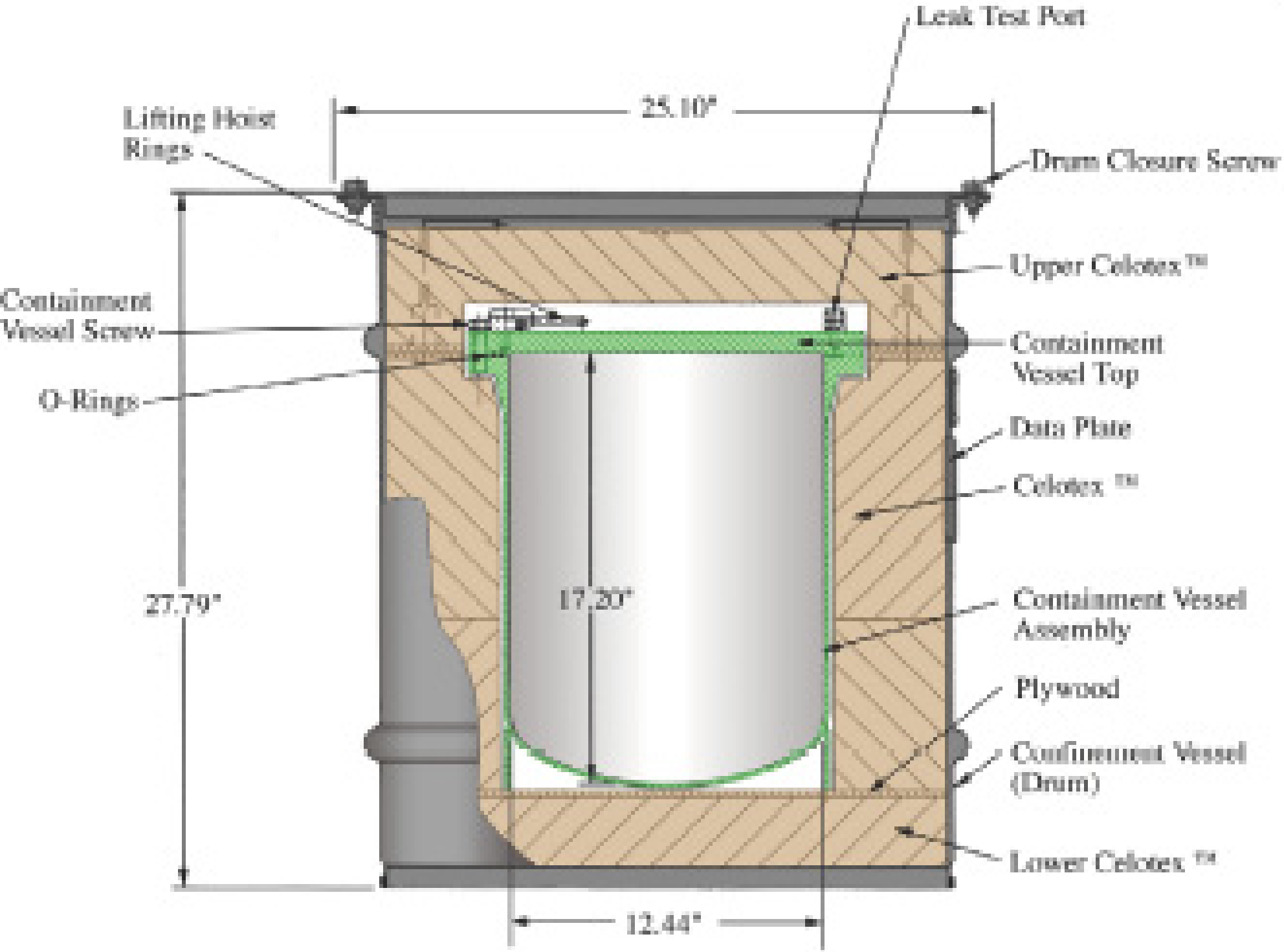
Leak Test Port
25.10"
Lifting Hoist Rings
Drum Closure Screw
Upper Celotex™
Containment Vessel Screw
Containment Vessel Top
O-Rings
Data Plate
Celotex ™
27.79"
17.20"
Containment Vessel Assembly
Plywood
Confinement Vessel (Drum)
Lower Celotex ™
12.44"