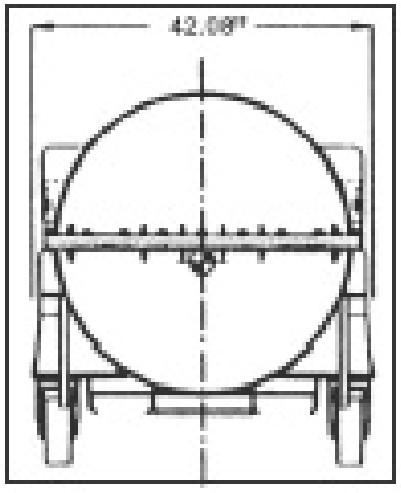
42.08"

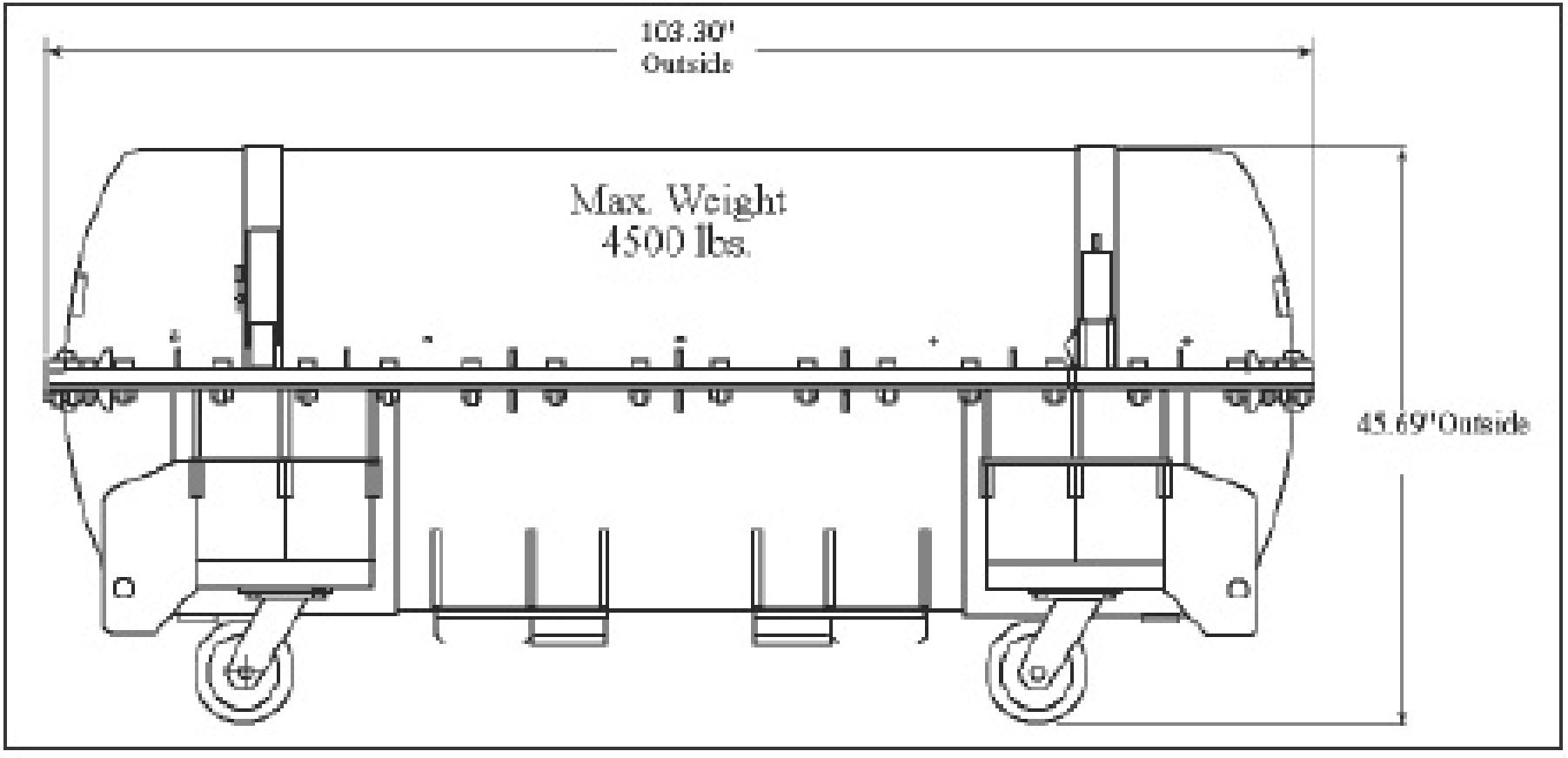
103.30'
Outside
Max. Weight
4500 lbs.
45.69'Outside